SERVICE 015

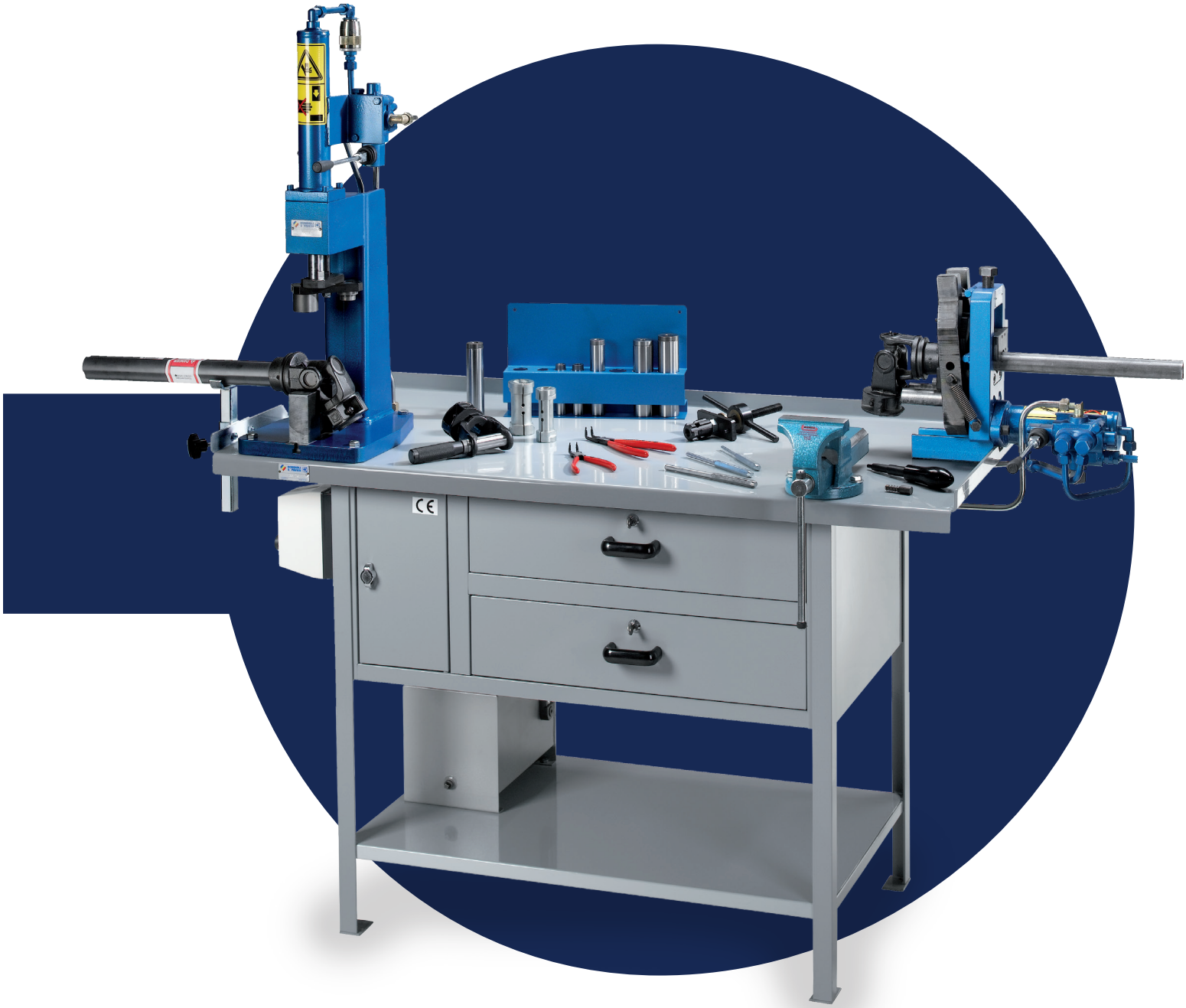

BONDIOLI & PAVESI

Safety and working condition	1
Identification	2
Lubrication	3
Troubleshooting	4
Hydraulic maintenance worktop	5
Cardan joint	6
Constant velocity joint 80°	7
Constant velocity joint 50°	8
Telescoping members	9
How to shorten and driveline	10
SFT range protection device	11
Global range protection device	12
Series 100 protection device	13
Restraint chains	14
Yokes and yoke-shaft connections	15
Overrunning clutches	16
Ratchet torque limiters	17
Shear bolt torque limiters	18
Automatic torque limiters LR	19
Friction torque limiters FV	20
Friction torque limiters FFV	21
Friction torque limiters FT	22
Combination friction torque limiters and overrunning clutches	23
Annexes: driveline drawings	24

© BONDIOLI & PAVESI SpA

No part of this manual may be reproduced
without specific permission from Bondioli & Pavesi.
All data and codes contained in this catalog replace and supersede any information given by previous publications. Consequently data provided in previous publications may no longer be valid. Bondioli & Pavesi reserves the right to change specifications without prior notice or obligation.

BONDIOLI & PAVESI

Repair Manual
SERVICE 015

BONDIOLI & PAVESI

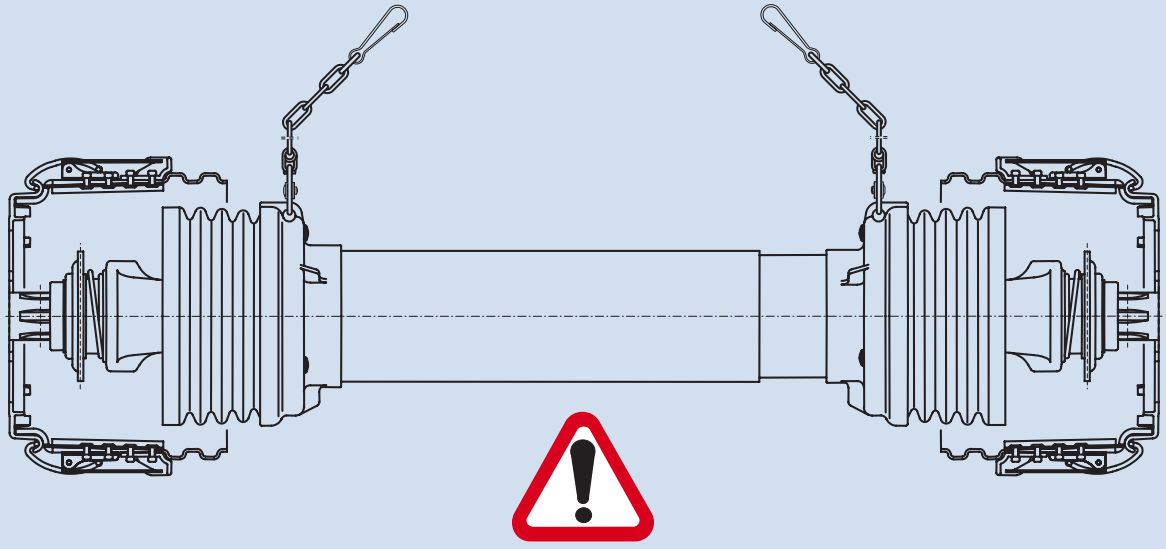

All rotating parts must be guarded.
The tractor master shield, the driveline guards, and the implement input connection shields form an interactive guarding system.

Proper use and maintenance of the driveline and shielding is of primary importance for operator safety.
A high percentage of driveline accidents occur when safety shielding is missing or does not function properly.
Bondioli & Pavesi recommends the use of proper shields and guards for the driveline, tractor, and implement. Damaged or missing components must be replaced with original equipment spare parts, correctly installed, before using the driveline.
Use the implement only with the original driveline. The implement input connection shield must be compatible with the driveline and the application.
To comply with international safety standards, the implement manufacturer shall provide safety sign(s) and instructions stating that guards must be kept in place and the machine should not be operated with guards opened or removed. These sign(s) should be used to draw attention to the possible risks when the guard is unlocked, opened, or removed.
In addition it is recommended that the implement manufacturer provide a list of the guards, their corresponding warnings, their positions, and spare parts codes in the instruction manual.
Basic information for safe and correct use of the driveline and shielding are shown in our catalogs and in the instruction sheet provided with Bondioli & Pavesi drivelines.
Safety labels and user's manuals in alternative languages are available to meet local requirements.

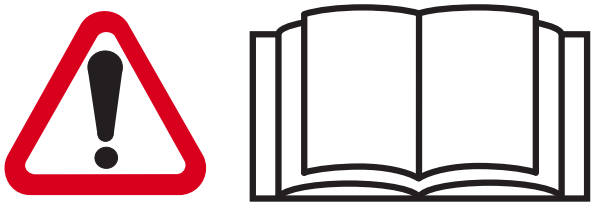

THE ABOVE INFORMATION CONCERNS YOUR SAFETY

Safety and working conditions



Use the implement only with the original driveline, which is compatible in length, power capacity, torque limiters, overrunning clutches, and shielding. The driveline and safety devices are designed specifically for the implement, and should be used exclusively for this purpose.
Do not exceed the speed and power limits given by the operator's manual. Drivelines, torque limiters, and overrunning clutches in this catalog are designed to be used at speeds that do not exceed 1000 min^{-1}.
Do not overload the implement or suddenly engage the PTO clutch. Any torque limiter or clutch should be installed on the implement end of the driveline. Use the driveline, torque limiters, and overrunning clutches only for their intended purpose.

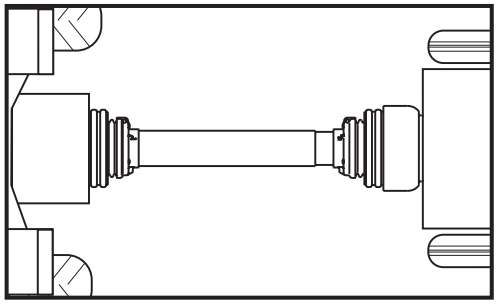

All rotating parts must be guarded. Contact with a rotating driveline can cause death or serious injury. The tractor master shield, the driveline guards, and the implement input connection shield form an interactive guarding system.

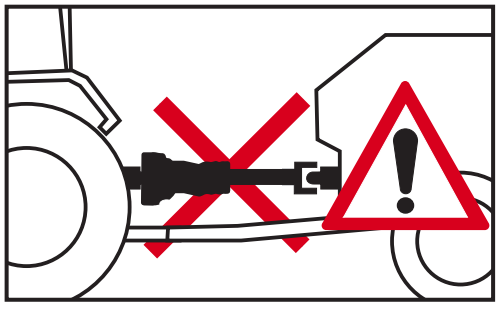

Ensure that all driveline, tractor, and implement shields are functional and in place before operation. Damaged or missing parts must be replaced with the original equipment spare parts, correctly installed, before using the driveline.

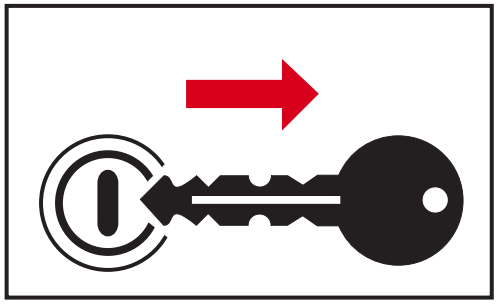

Disengage the PTO, turn off the tractor engine, remove the key, and check that all rotating parts have come to a standstill before approaching the implement or performing maintenance work.



Do not approach, nor allow bystanders to come near the work zone or rotating parts. Do not wear loose clothing, jewelry, hair, or anything which could get caught in the machine.
Contact with rotating parts could cause serious injury or death.

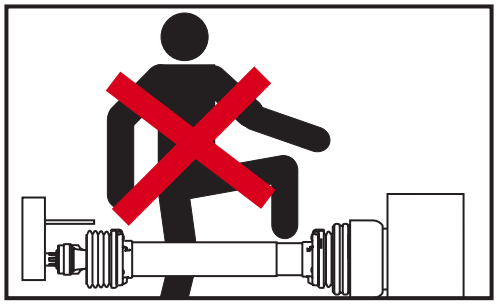

Do not stand, lean, or otherwise come in contact with the driveline. Do not step over or go under the driveline.

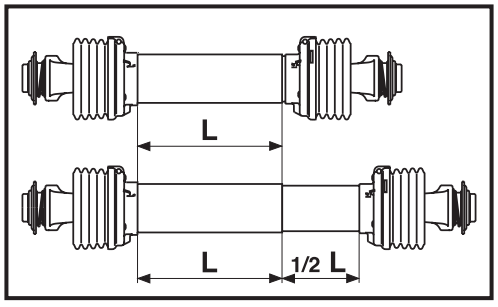

Keep the profile tubes overlapped as much as possible during transport and operation. Do not exceed the values given in this catalog for permissible length extension. If greater telescoping ability is required, contact Bondioli & Pavesi engineering.

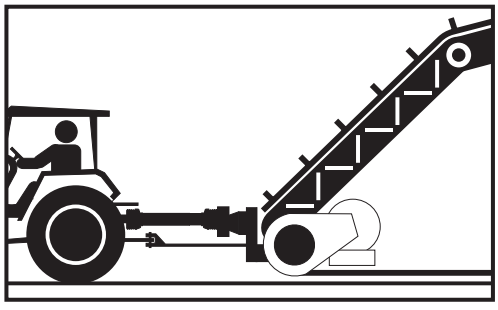

Always hitch the tractor to STATIONARY MACHINERY (pumps, hoists, generators, dryers, etc.). Check the tractor wheels to prevent rolling and check that joint angles are small and as equal as possible.

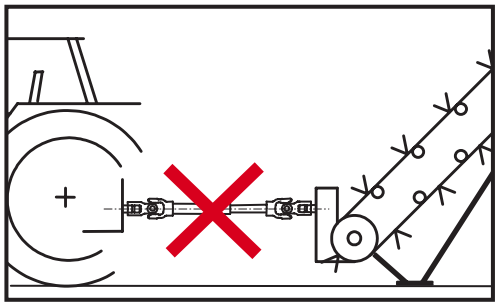

Always hitch the tractor to STATIONARY MACHINERY (pumps, hoists, generators, dryers, etc.) so that the profile tubes are not overextended. Under all working conditions, extension of the driveline should not exceed the values reported in this catalog. All rotating parts must be guarded.

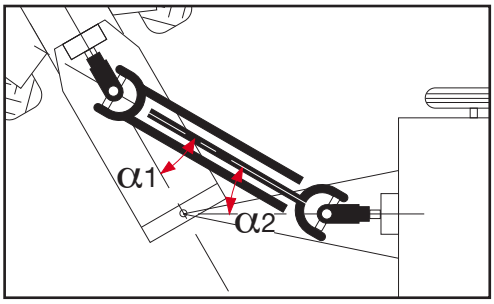

SINGLE CARDAN J0INTS

When operating, ensure that angles α_1 and α_2 are small and as equal as possible. The joint angles may vary widely during turns, but must never exceed 35° under power or 45° while rotating. Disengage the PTO when the joint angles become excessive or too unequal. See “Driveline Applications” for more information.

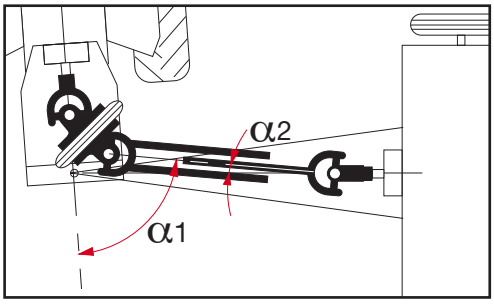

CONSTANT VELOCITY JOINTS

Constant velocity joint can allow large joint angles up to 50° or 80° depending upon the type. These joint angles should only be allowed for brief periods, for example during turning.

For drivelines with a constant velocity joint on the tractor side and a single cardan joint on the implement side, the maximum recommended angles of the single joint are 16° at 540 min^{-1} and 9° at 1000 min^{-1} to prevent irregular motion. See “Driveline Applications” for more information.

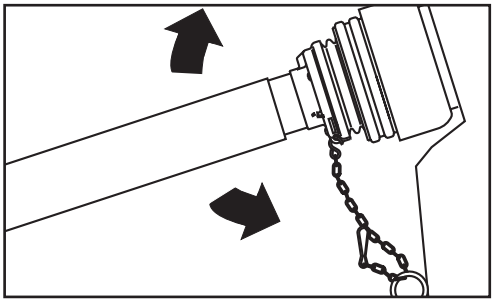

Attach the shield restraint chains, allowing sufficient slack for the driveline to move during turns and operation.

Best results are achieved when the chains are attached nearly perpendicular to the driveline guard. Adjust the length to allow articulation of the driveline in working or transport positions, but avoid excessive slack that may wrap around the driveline.

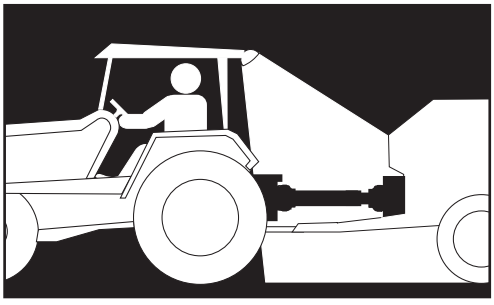

When used at night or in poor visibility, illuminate the driveline operating area.

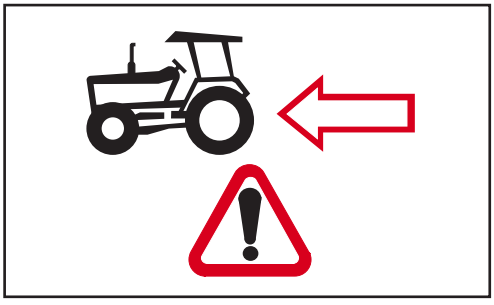

The tractor printed on the shield indicates the tractor end of the driveline. Any torque limiter or overrunning clutch must be installed on the implement end of the driveline.

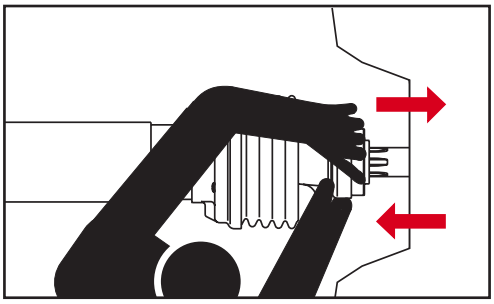

Ensure that the driveline is securely attached to the tractor and the implement before operating.
Check that all bolts or nuts are properly torqued.

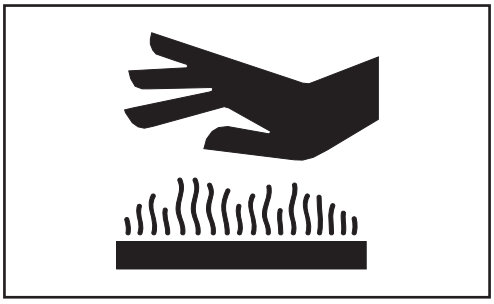

Friction clutches may become hot during use.
Do not touch!
Keep the area around the friction clutch clear of any material which could catch fire and avoid prolonged slipping.

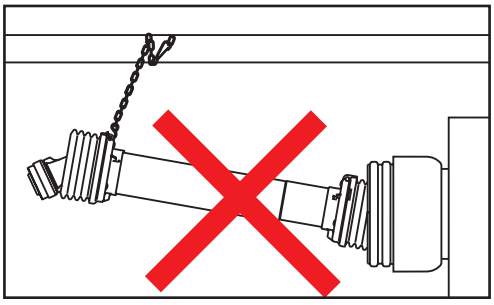

Never use the shield restraint chains to support the driveline for storage. Always use the support on the implement.

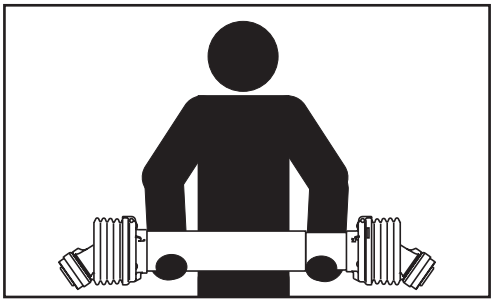

Keep the driveline horizontal during handling to prevent the halves from sliding apart, which could cause injury or damage the shielding. Use suitable means to transport the driveline, depending on the weight.

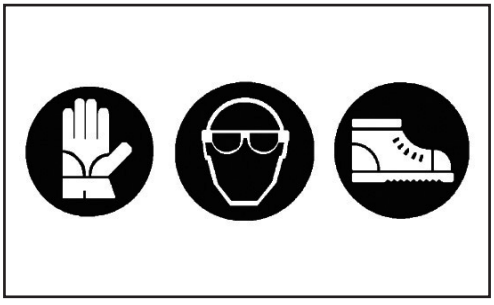

Always wear adequate safety equipment when performing any maintenance or repair work.
Clean and grease the PTO of the tractor and the implement input connection to facilitate installation of the driveline.
Replace worn or damaged components with the original Bondioli & Pavesi spare parts. Do not alter or tamper with any driveline component. Contact an authorized Bondioli & Pavesi dealer concerning any operations not described in the instruction manual.

CARDAN JOINT DRIVELINES SFT SERIES

Cardan joint driveline



Cardan joint driveline
with 80° constant velocity joint

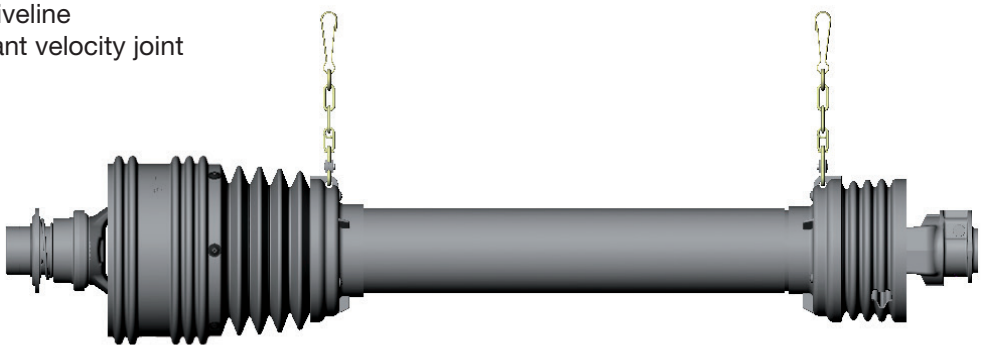

Cardan joint driveline
with 50° constant velocity joint

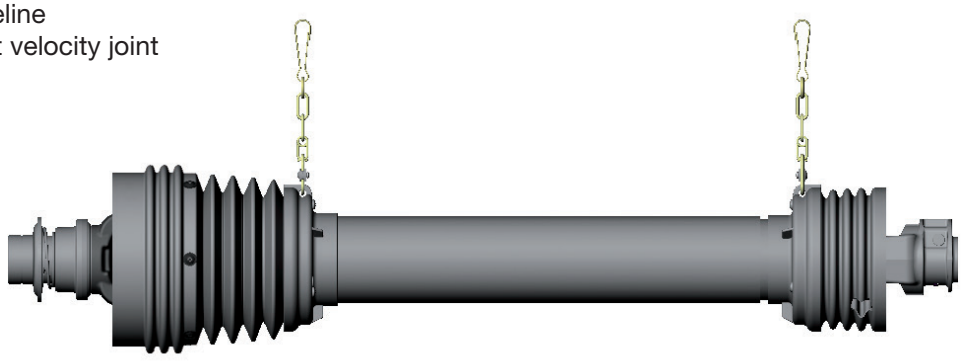

Identification

CARDAN JOINT DRIVELINES GLOBAL SERIES

Cardan joint driveline



Cardan joint driveline
with 80° constant velocity joint

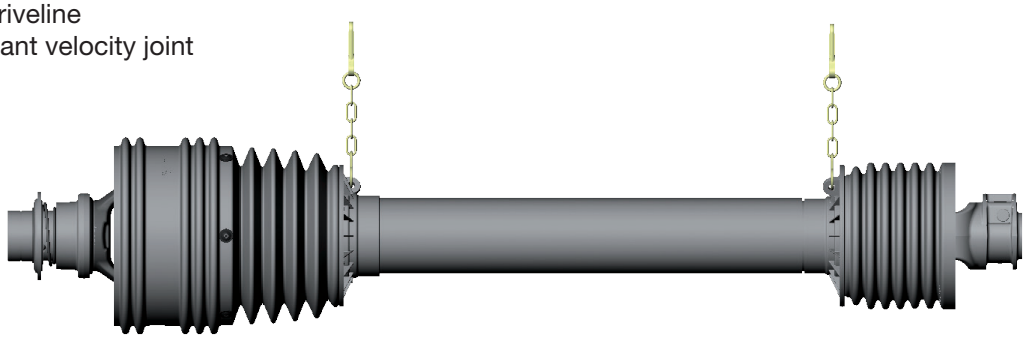

Cardan joint driveline
with splined stub shaft

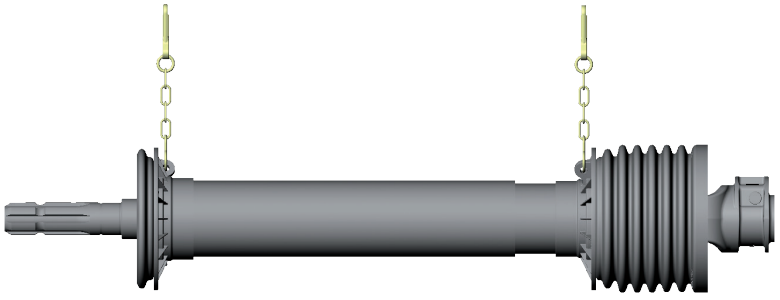

CARDAN JOINT DRIVELINES 100 SERIES

Cardan joint driveline



Cardan joint driveline
with 80° constant velocity joint

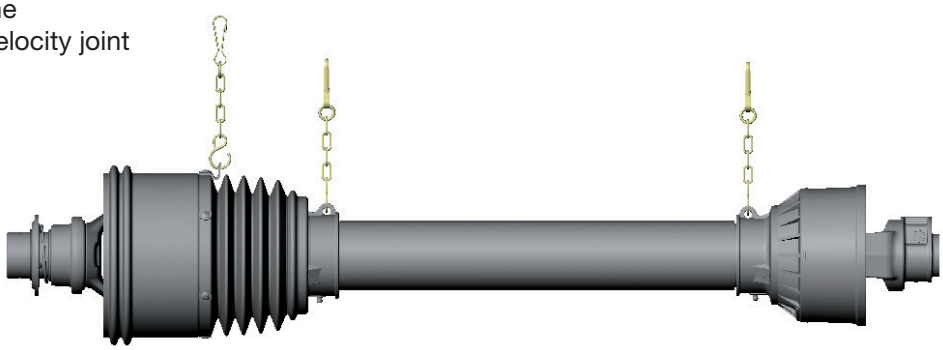

Cardan joint driveline
with 50° constant velocity joint

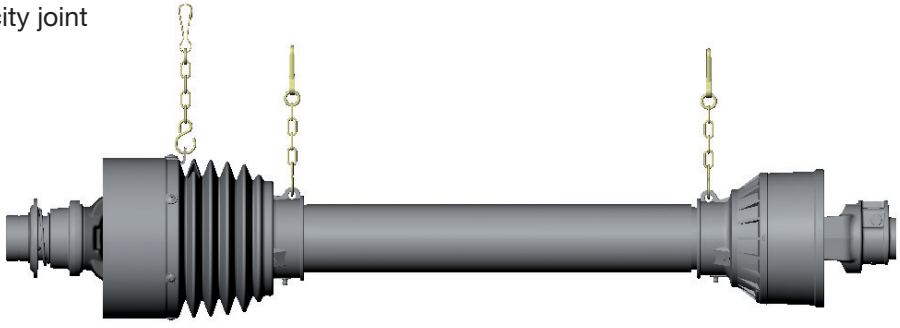

Cardan joint driveline
with constant velocity joints
652 662 672 type

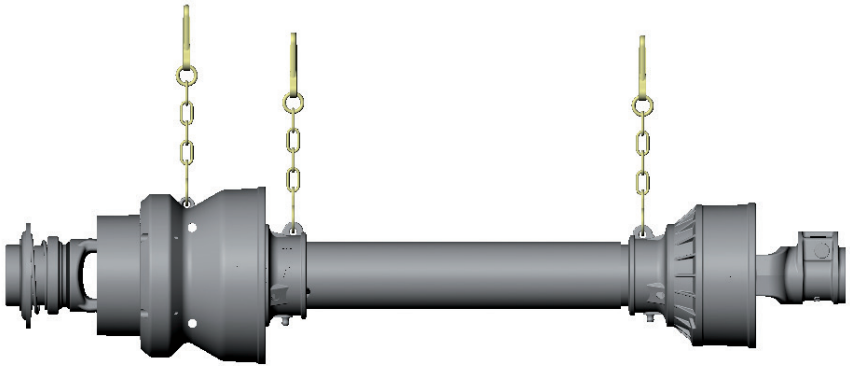

Identification

SINGLE CARDAN JOINTS

Single cardan joint

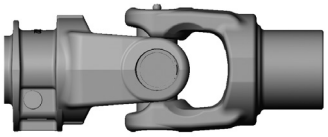

Double cardan joint

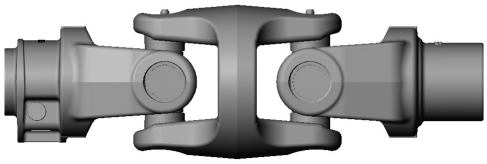

Flanged double joint

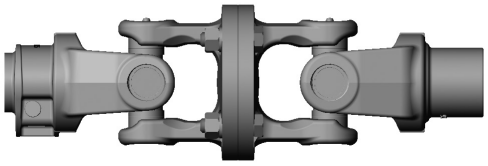

Constant velocity joint 80°

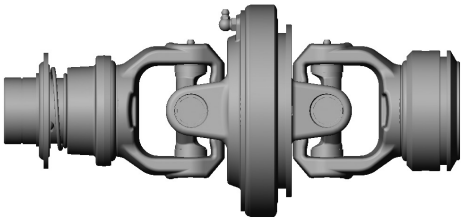

Constant velocity joint 50°

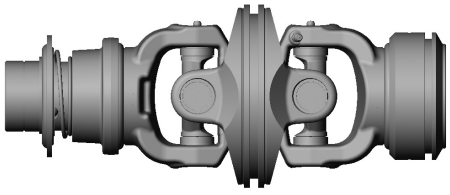

TELESCOPING MEMBERS

Four-Tooth profile tubes

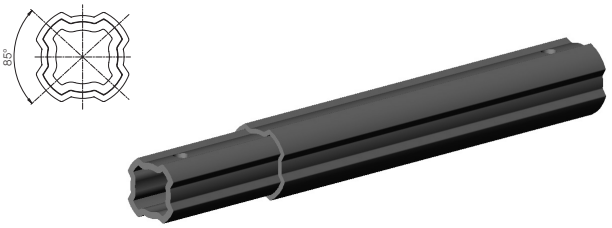

Free Rotation profile tubes

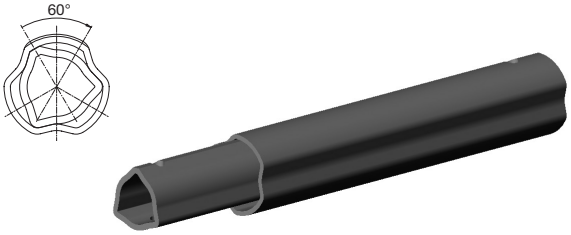

Splined profile tubes

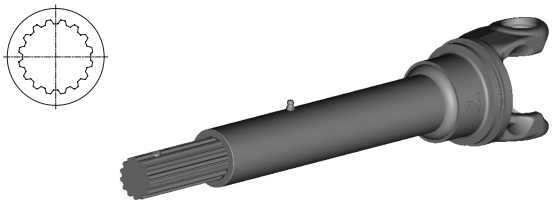

Triangle profile tubes

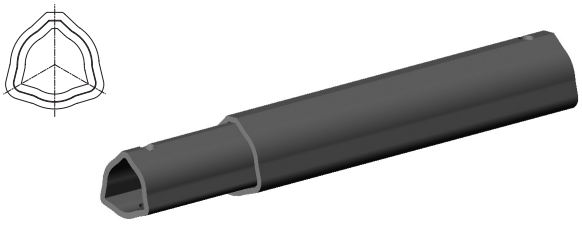

END YOKES

Taper pin yokes



RT Ball collar yokes



RTA Automatic ball collar yokes



Taper-pin yokes



TORQUE LIMITERS AND OVERRUNNING CLUTCHES

Overrunning clutch

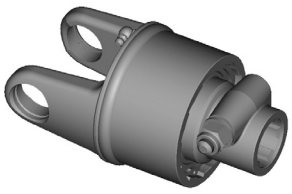

Torsionally resilient joint

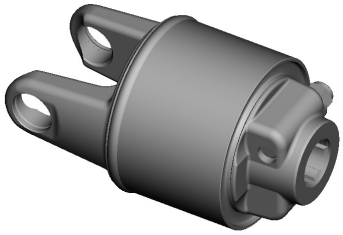

Ratchet torque limiter

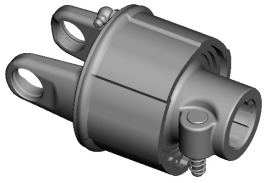

Shear bolt torque limiter

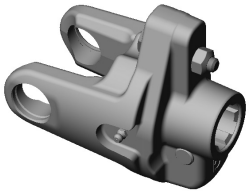

Automatic torque limiter

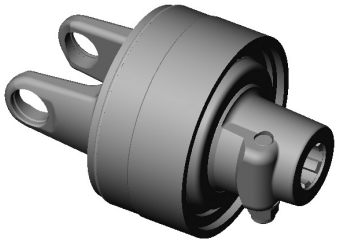

Identification

FRICTION CLUTCHES

FV

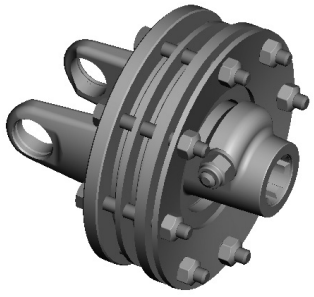

FFV

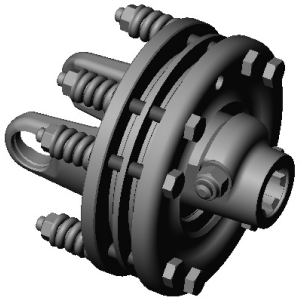

FT

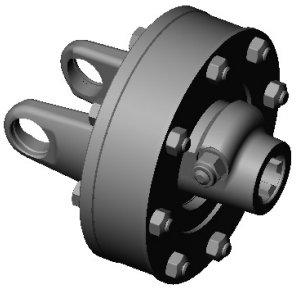

FRICTION CLUTCHES WITH OVERRUNNING CLUTCH

FNV

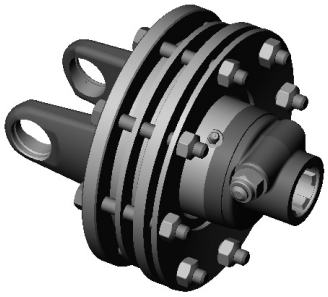

FFNV

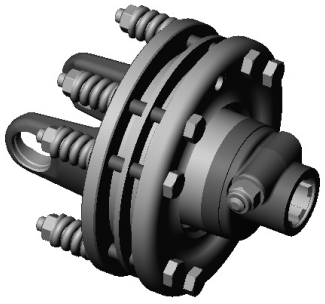

FNT

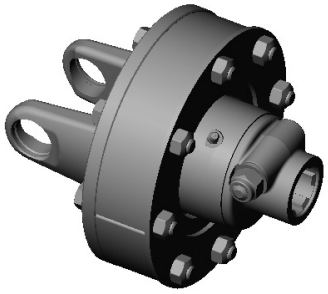

FLYWHEEL FRICTION CLUTCHES

FE42 - 44 - 46

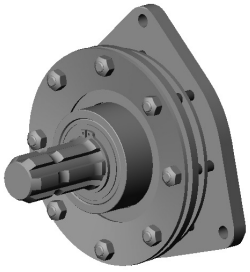

FE62 - 82



Proper lubrication of all rotating and sliding parts is essential for proper function, long life, and reliability. Insufficient lubrication, or contamination of the lubricant, is one of the most frequent causes of failure of cardan joint drivelines. The lubrication frequency and the type of grease used are important to the life of the driveline, as well as the shafts and bearings of the components to which they are connected.
Joints, telescoping members, and shields must be lubricated at intervals related to the environment and working conditions.
Grease contains a soap base (lithium, calcium, or sodium based), lubricating oils, and additives (e.g. molybdenum disulphide).
These additives are used for corrosion resistance, strength, adhesion at extreme pressures (EP), or other properties. The soap base can be compared to a “sponge”; it retains lubricating oils and gradually releases them to the components. Its efficiency diminishes with longer working periods and with higher pressures.
Greases are classified by the National Lubricating Grease Institute (NLGI) according to their consistency.
Bondioli & Pavesi recommends NLGI #2 grease on all crosses, telescoping members and shields.
NLGI #2 molybdenum disulphide grease is recommended for devices that are lubricated only once (e.g. during assembly) in their entire service life, such as RL overrunning clutches and LR automatic torque limiters.

The following instructions, that are also listed in the operator’s manual of the driveline, should be included in the manual provided by the implement manufacturer.

Disengage the PTO, turn off the tractor engine, remove the key, and check that all rotating parts have come to a standstill before approaching the implement or performing maintenance work.

It is recommended to grease the components before the initial use.
Clean and lubricate the driveline before storage, and at the end of the season.
When greasing cross kits, lubricate generously until the grease purges from all four bearing caps. Pump grease gradually. Avoid high pressures, especially those possible from pneumatic equipment.
Clean and lubricate the driveline before storage at the end of the season. It is also recommended to clean out any grease inside the CV joint shields.

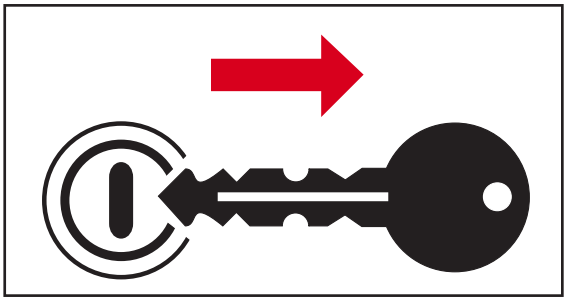

Disengage the PTO, turn off the tractor engine, remove the key, and check that all rotating parts have come to a standstill before approaching the implement or performing maintenance work.

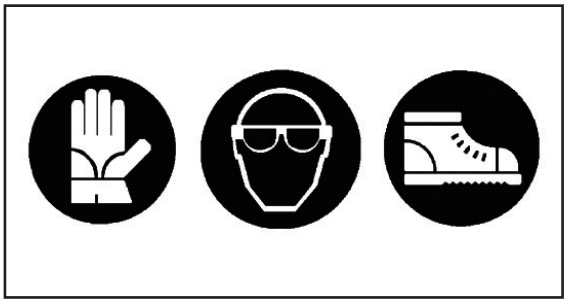

Always wear adequate safety equipment when performing any maintenance or repair work.
Clean and grease the PTO of the tractor and the implement input connection to facilitate installation of the driveline. Replace worn or damaged components with the original Bondioli & Pavesi spare parts. Do not alter or tamper with any driveline component. Contact an authorized Bondioli & Pavesi dealer concerning any operations not described in the instruction manual.

Lubrification

Cardan joint drivelines SFT series
Lubrication Frequency (hours) and estimated grease volumes

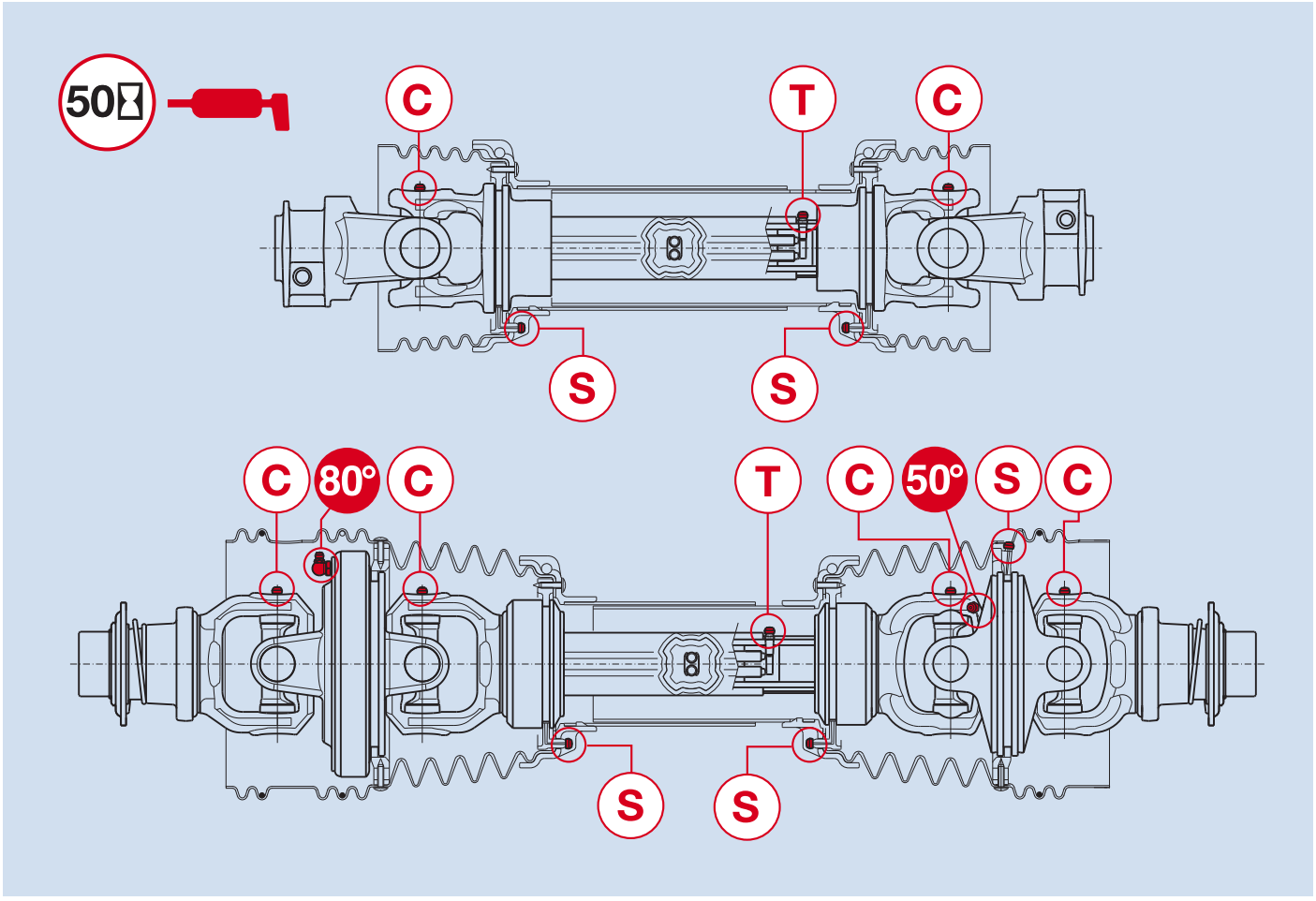

	S1	S2	S4	S5	S6	H7	S8	H8	S9	SH	S0
Cross (C)	4 g	7g	10g	13 g		18 g	22 g		26 g	28 g	30 g
Shield bearings (S)	6 g										
Telescopic members (T)	12 g		20 g				32 g				
80° CV-joint (80°)		20 g	30 g		60 g		80 g		100 g	160 g	
50° CV-joint (50°)			5 g		6 g		7 g		8 g		

Manually operated grease guns provide approximately 0.8 – 1.0 grams of grease per pump.
One (1) ounce of grease is approximately 28.3 grams.
Bondioli & Pavesi recomends NLGI 2 grease on all crosses, telescoping members and shields.

When lubricating cross kits, pump grease until the grease purges from all four bearing caps. Pump the grease gradually. Avoid high pressures, especially those possible from pneumatic equipment.

Cardan joint drivelines Global series
Lubrication Frequency (hours) and estimated grease volumes

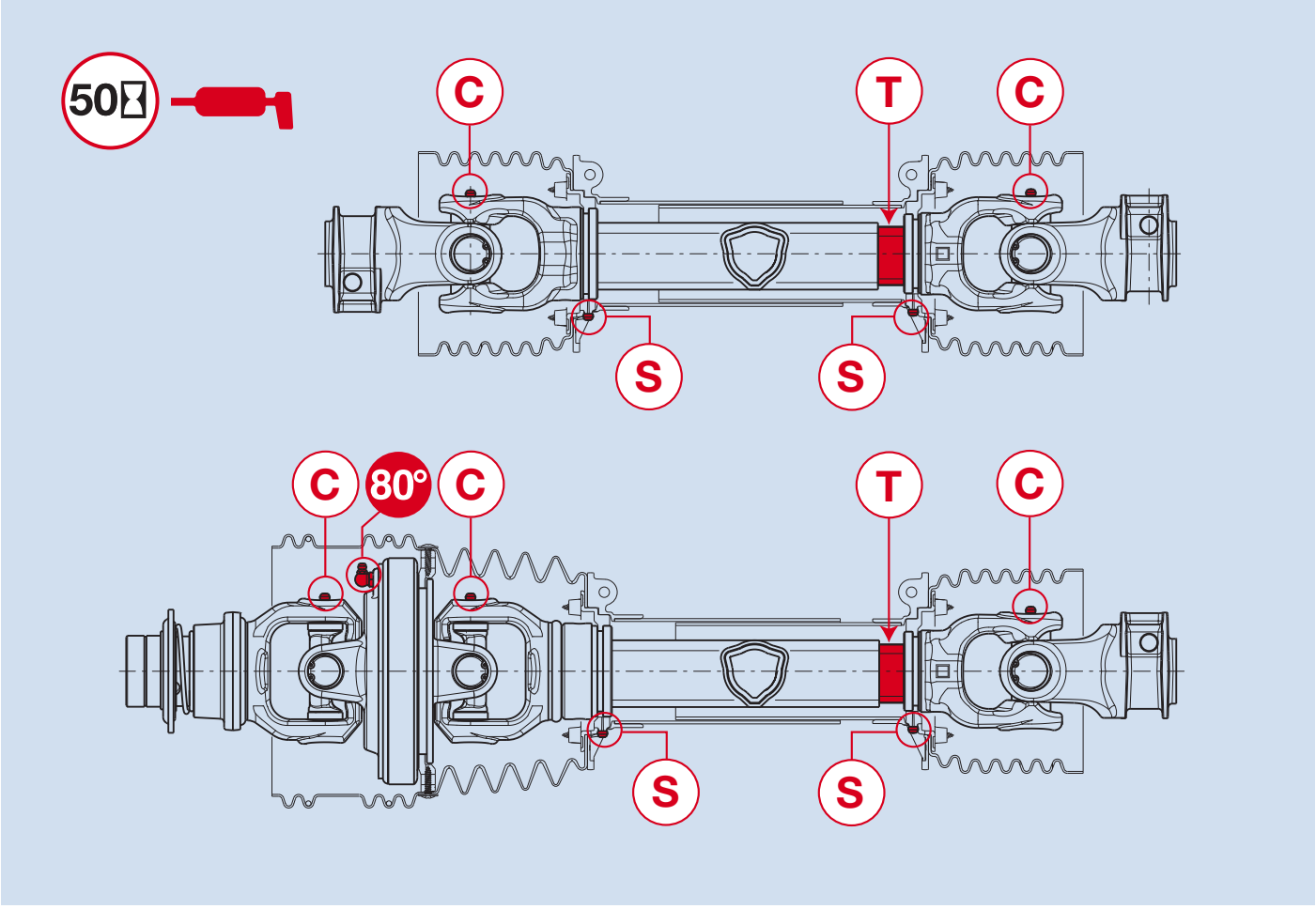

	G1	G2	G3	G4	G5	G7	G8
Crosses (C)	4 g	7 g	10 g		13 g	18 g	22 g
Shield bearings (S)	6 g						
Telescopic members (T)	12 g		20 g				32 g
80° CV-joint (80°)		20 g		30 g	60 g		80 g

Manually operated grease guns provide approximately 0.8 – 1.0 grams of grease per pump.
One (1) ounce of grease is approximately 28.3 grams.
Bondioli & Pavesi recomends NLGI 2 grease on all crosses, telescoping members and shields.

When lubricating cross kits, pump grease until the grease purges from all four bearing caps. Pump the grease gradually. Avoid high pressures, especially those possible from pneumatic equipment.

Lubrification

Cardan joint drivelines 100 series
Lubrication Frequency (hours) and estimated grease volumes

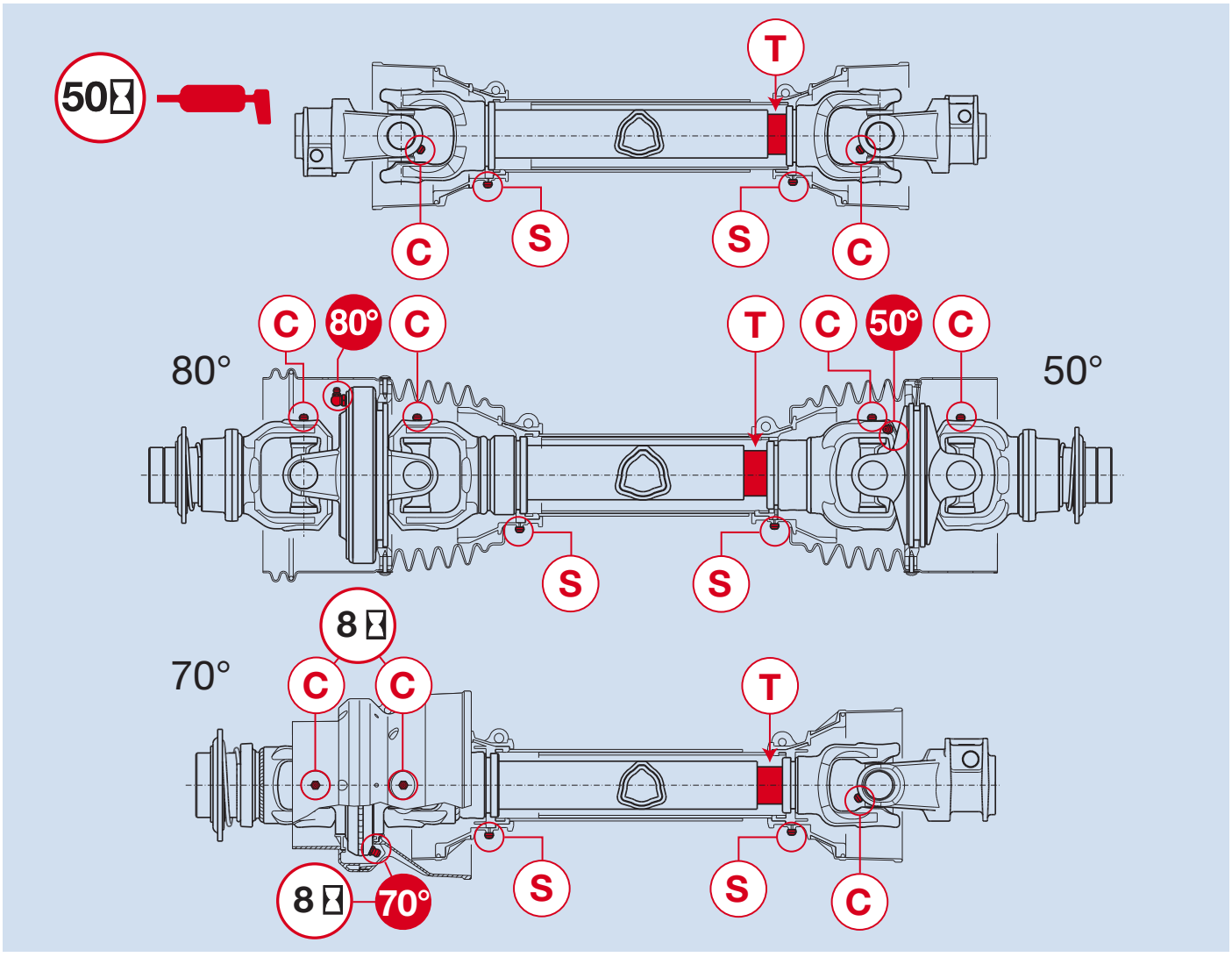

	1	2	43	4	5	6	7	8
Crosses (C)	2 g				4 g		5 g	
Shield bearings (S)	1 g							
80° CV-joint (T)	12 g		20 g				32 g	
50° CV-joint (80°)		20 g		20 g		30 g		40 g
70° CV-joint (50°)				3 g		4 g		4 g
(70°)		20 g						

Manually operated grease guns provide approximately 0.8 – 1.0 grams of grease per pump.
One (1) ounce of grease is approximately 28.3 grams.
Bondioli & Pavesi recomends NLGI 2 grease on all crosses, telescoping members and shields.

When lubricating cross kits, pump grease until the grease purges from all four bearing caps. Pump the grease gradually. Avoid high pressures, especially those possible from pneumatic equipment.

RA1 Overrunning clutches

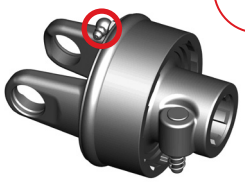

RA2 Overrunning clutches

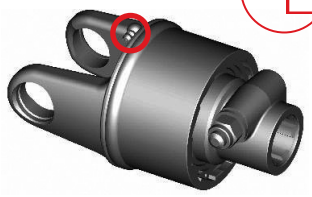

SA Ratchet torque limiters



LN Ratchet torque limiters

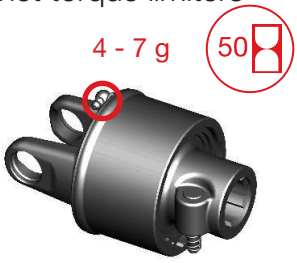

LC Ratchet torque limiters



seasonal
4 - 7 g

LT Ratchet torque limiters



seasonal
4 - 7 g

LB Shear bolt torque limiter



seasonal
1 - 2 g

FNT Friction torque limiter
and overrunning clutch

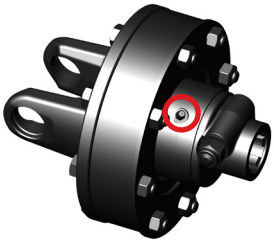

5 - 7 g

FNV Friction torque limiter
and overrunning clutch

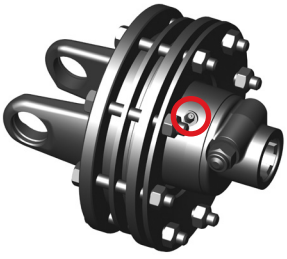

5 - 7 g

FFNV Friction torque limiter
and overrunning clutch

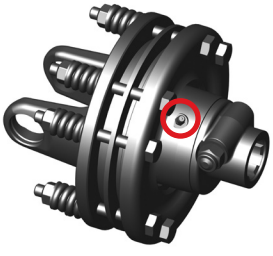

5 - 7 g

Lubrification

LUBRICATION OF TELESCOPING TUBES



If grease fittings are not provided, separate the two halves of the driveline, and manually lubricate the telescoping tubes.

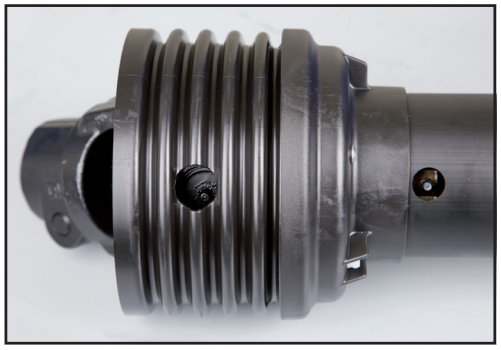

GREASING SYSTEMIf the driveline is equipped with the Greasing System the telescoping tubes may be lubricated via the grease fitting located next to the tube yoke.The Greasing System enables rapid lubrication of telescoping tubes at any driveli-ne position, without removal from either the tractor or implement.

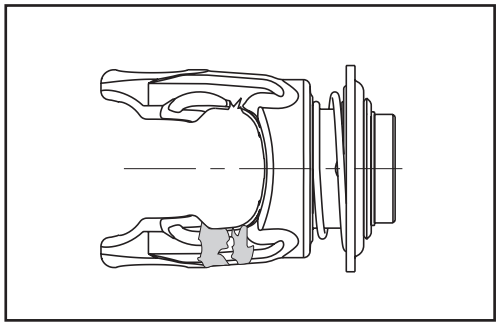

WEAR OF YOKE EARS

Possible cause: EXCESSIVE WORKING ANGLE

Solutions: • reduce working angle;
• disengage PTO when joint angle exceeds 45°.

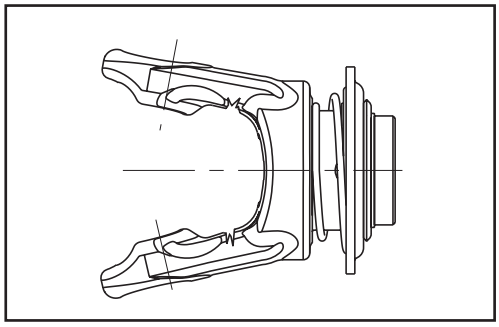

DEFORMATION OF YOKE EARS

Possible cause: EXCESSIVE TORQUE PEAK OR SHOCK LOAD

Solutions: • avoid overloading and engaging drive under load;
• check function of torque limiter.

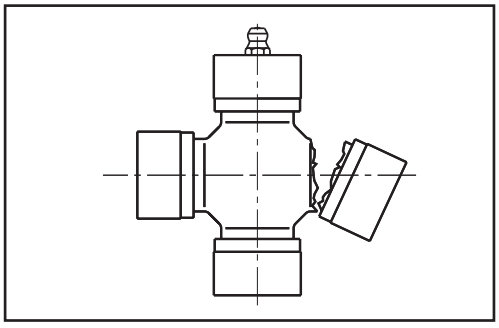

CROSS ARMS BROKEN

Possible cause: EXCESSIVE TORQUE PEAK OR SHOCK LOAD

Solutions: • avoid overloading and engaging drive under load;
• check function of torque limiter.

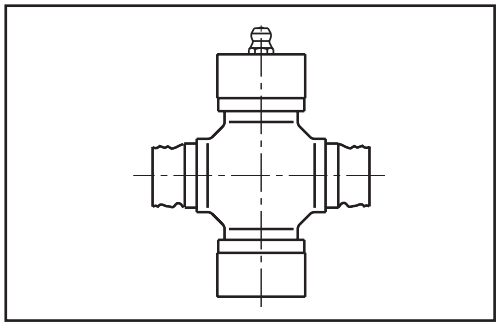

ACCELLERATED WEAR OF CROSS ARMS

Possible cause: EXCESSIVE LOAD

Solutions: • do not exceed the speed or power limits indicated in the instruction manual.

Possible cause: INSUFFICIENT LUBRICATION

Solutions: • Follow the instructions described in the use and maintenance manual or refer to the “Lubrication” chapter.

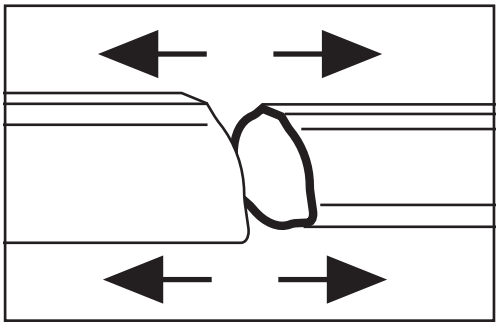

SEPARATION OF TELESCOPING TUBES

Possible cause: EXCESSIVE EXTENSION OF DRIVELINE

Solutions: • avoid excessive extension of driveline;
• If possible, use a longer shaft;
• for stationary machines: Place the tractor in such a way with respect to the machine that the telescopic elements overlap for at least 1/2 of their length.

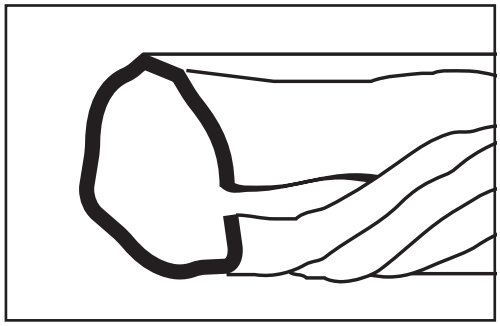

DEFORMATION OF TELESCOPING TUBES

Possible cause: EXCESSIVE TORUQE PEAK OR SHOCK LOAD

Solutions:
- avoid overloading and engaging drive under load;
- check functioning of torque limiter;
- check that driveline does not come into contact with tractor or implement components during movement.

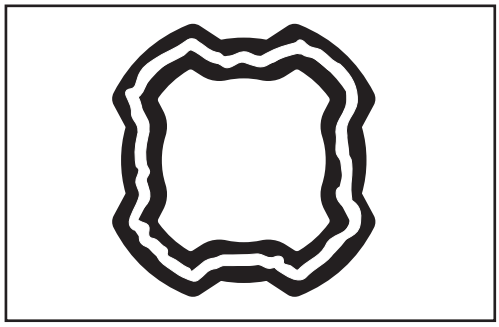

ACCELERATED WEAR OF TELESCOPING TUBES

Possible cause: INSUFFICIENT LUBRICATION

Solutions:
- Follow the instructions described in the use and maintenance manual or refer to the “Lubrication” chapter.

Possible cause: INSUFFICIENT TUBE OVERLAP

Solutions:
- Ensure that, in operating mode, the pipes overlap for at least 1/2 of their length.

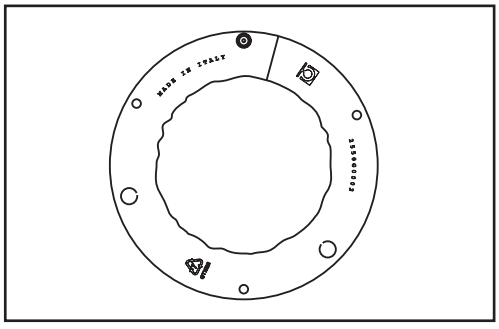

ACCELERATED WEAR OF SHIELD BEARING

Possible cause: INSUFFICIENT LUBRICATION

Solutions:
- Follow the instructions described in the use and maintenance manual or refer to the “Lubrication” chapter.

Possible cause: RESTRAINT CHAIN NOT FASTENED PROPERLY

Solutions:
- Fasten the chain radially with respect to the driveline, adjusting its length in order to allow the driveline to articulate easily in every operating condition.

398038000
Full hydraulic bench for universal joint repair



Hydraulic maintenance worktop

TOOLS

398014000
Punch tool set



397003000	Ø6
397004000	Ø8
397005000	Ø10

398015000
Snap ring pliers



397001000	Plier J21
397002000	Plier J31

397074000
Punches and bushes set for joint assembly and disassembly press



Punches	bearing Ø
397062000	22.0
397063000	23.8
397064000	27.0
397065000	30.2
397066000	34.9
397067000	41.0-42.0

Bushes	bearing Ø
397068000	22.0
397069000	23.8
397070000	27.0
397071000	30.2
397072000	34.9
397073000	41.0-42.0

398018001
Plug gauge set to check yoke bearing housing concentricity



Plug gauges	bearing Ø
397084000	22.0
397085000	23.8
397086000	27.0
397087000	30.2
397088000	34.9
397089000	41.0
397096000	42.0
397083000	Handle

TOOLS

398012000

Ratchet torque limiter assembling tool

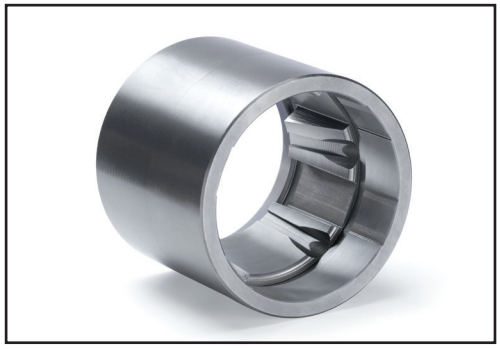

398017000

Ratchet torque limiter extractor

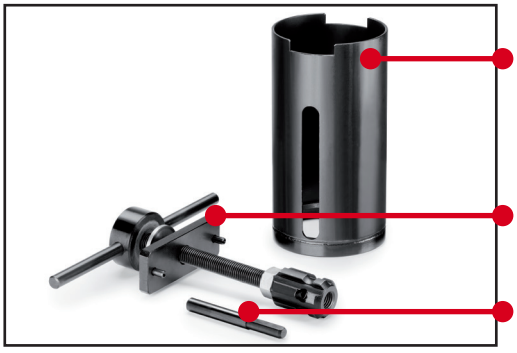

Available on request:

397007002 Optional

Treaded bar with 1 3/8” z21 spline

398024000

Push pin assembling tool



398034000

Hydraulic extractor

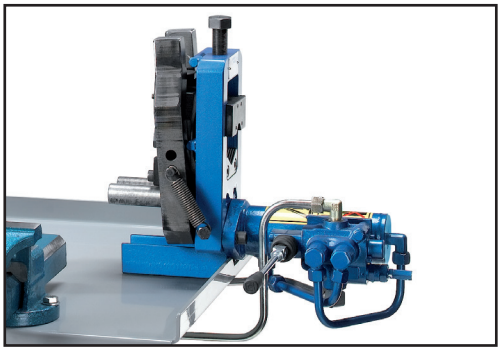

Hydraulic maintenance worktop

TOOLS

398049000

Vice



398054000

Hydraulic press for joint assembly and disassembly



398075000

Bearing extractor
Ø 20.0
Ø 22.8

398076000

Bearing extractor
Ø 23.8
Ø 27.0

398072000

Bearing extractor
Ø 30.2
Ø 34.9

398073000

Bearing extractor
Ø 41.0
Ø 42.0



JOINT IDENTIFICATION

The following table allows determining the size of the cardan joints according to the diameter Ø of the bearing and the size of the cross kit H.
SFT And Global cross kits have a grease fitting on the bearing, while the Series 100 ones have the grease fitting at the centre of the cross kit body.

Ø mm	H mm	SFT	Global	100
22,0	54,0	S1	G1	1
23,8	61,3	S2	G2	2
27,0	74,6	S4	G3-G4	43-4
30,2	79,4	S5-S6	G5	5
30,2	91,5	S7	G7	6
34,9	93,5	S8-H8	G8	7
34,9	106,0	S9	- -	8
42,0	107,5	SH	- -	- -
42,0	130,8	S0	- -	- -

Cross kit SFT and Global Series

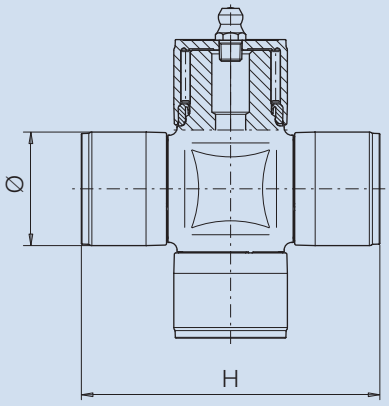

Cross kit 100 Series

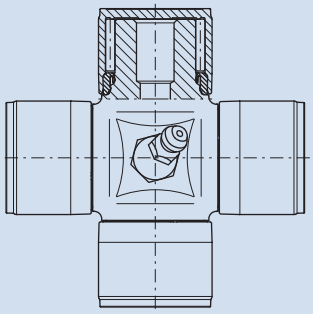

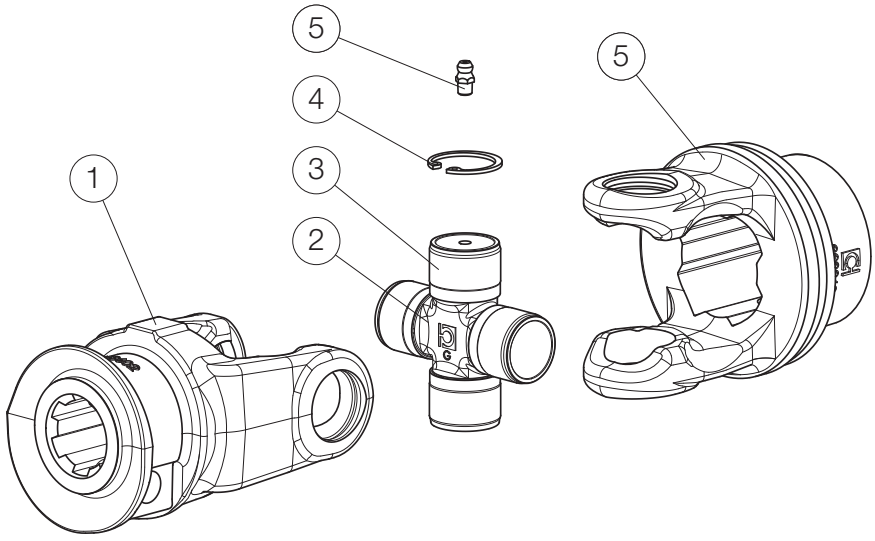

Ref	Description
1	Outer yoke
2	Cross kit body
3	Needle bearing (x4)
4	Snap ring (x4)
5	Grease fitting
6	Inner yoke

DISASSEMBLY

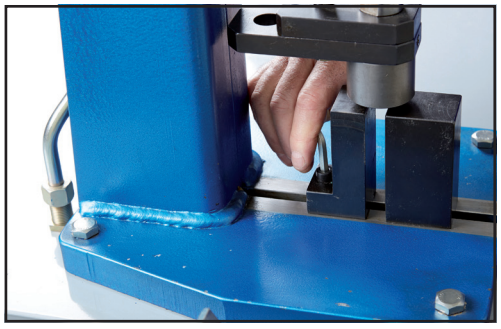

The procedure shows the operations to disassemble an SFT joint.

1. Prepare the hydraulic press for (398054000) for disassembling the joint.
   - Select the pressor and bushing (398074000) and install them on the press.
   - Lower completely the bearing holder with the bushing in place. Close the blocks against the bushing and fasten the rear block.

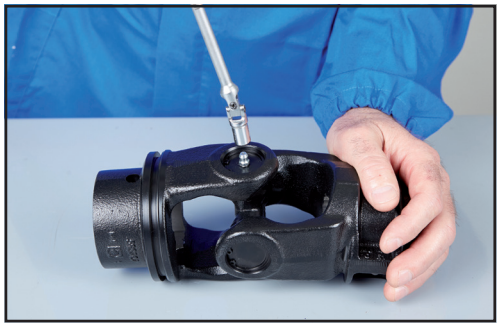

2. Remove the grease fitting.
   In SFT joints, the grease fitting is located on the bearing; whereas, on Series 100 joints, it is located on the cross kit body.

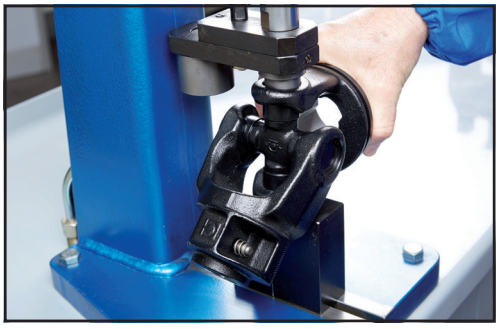

3. Join the blocks.
   Use the pressor to move one of the retaining rings of the inboard yoke.

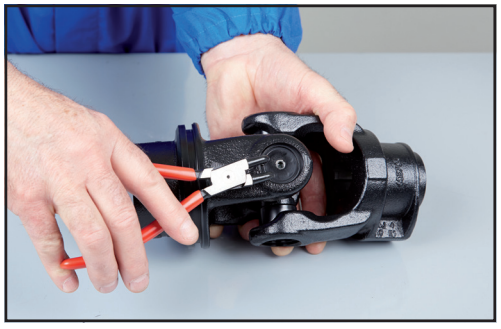

4. Remove the retaining ring using the appropriate pliers.
5. Remove the retaining ring on the opposite side of the inboard yoke repeating the procedure at steps 3 and 4.



6. Rotate the tool holder of the press to use the extraction bushing. Loosen the moving block.
7. Place the joint in order for the outer yoke ears to rest onto the blocks and lower the bushing to the housing of one of the bearings of the inboard yoke, verifying that it is correctly centered.
8. Press the yoke ear progressively until the bearing is partly disengaged.







9. Use an extractor of an adequate size to tighten the bearing, using the clamp as shown in the figure.
   Extract the bearing hitting the yoke ear gently with a hammer.
10. Repeat the procedure from step 7 to step 9 to extract the opposite bearing. Extract the inboard yoke from the cross kit.
11. Repeat the procedure from step 3 to step 10 to disassemble the outboard yoke bearings.
12. Once disassembled, use coaxiality gauges 398018001 to verify the coaxiality of the bearing housings.
    Use a file to eliminate any burrs that may form on the yoke eyes while disassembling the joint.
    Verify the state of the cross kit pins and of the needle bearings. The bearings must rotate around the pins without any radial clearance.

    Replace any damaged components with original Bondioli & Pavesi spare parts.

Cardan joint

ASSEMBLY

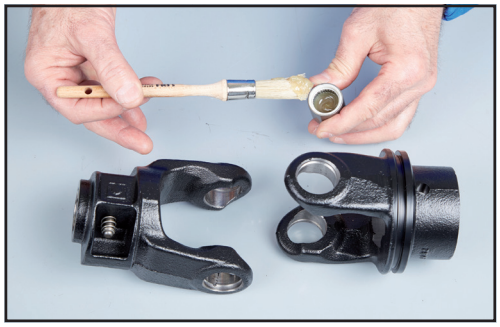

The procedure shows the operations to assemble an SFT joint.

1. Apply a small amount of grease onto the bearing rollers.



2. Place a bearing in the housing of one of the end yokes, making sure that it is properly aligned.

   ATTENTION: as for SFT and Global joints, the bearing with the hole for the grease fitting must be placed in an eye of the inboard yoke.

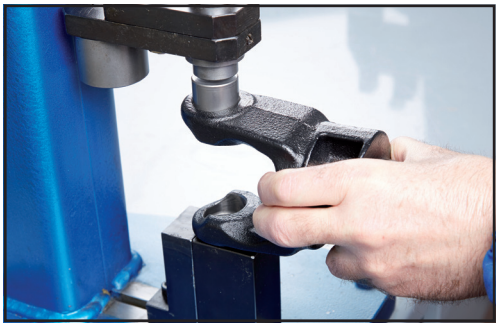

3. While keeping the blocks closed, partially insert the first bearing.



4. Insert a cross kit pin in the free bearing housing and then insert the opposite pin in the previously assembled bearing.

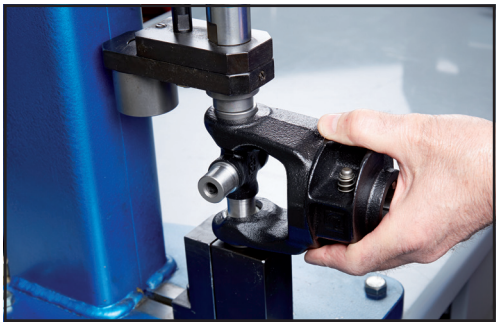

5. Insert the second bearing, aligning it with the cross kit pin and pushing it beyond the retaining ring groove.
6. Insert the retaining ring into the groove, making sure that it is firmly positioned.

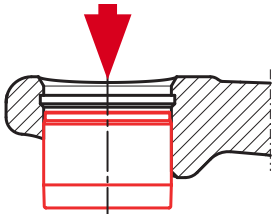

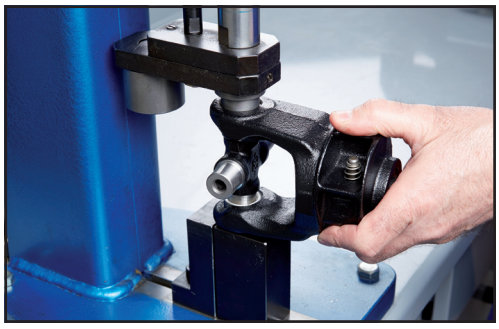

7. Push the first bearing beyond the retaining ring groove.
8. Insert and adjust the retaining ring into the groove.

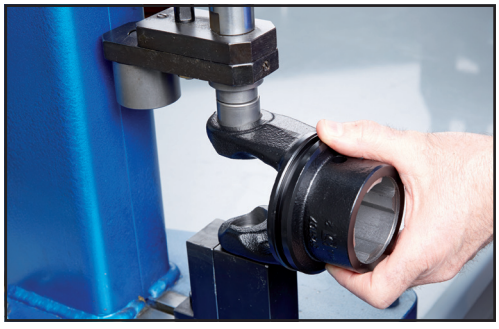

9. Partially insert the third bearing with the hole for the grease fitting into one of the inboard yoke housings.

   ATTENTION: the housing where to install the bearing with the hole for the grease fitting must comply with the alignment of all the driveline grease fittings, including the ones for the telescopic pipe greasing systems (Greasing System, Direct Greasing). Refer to the driveline drawings in the appendix.

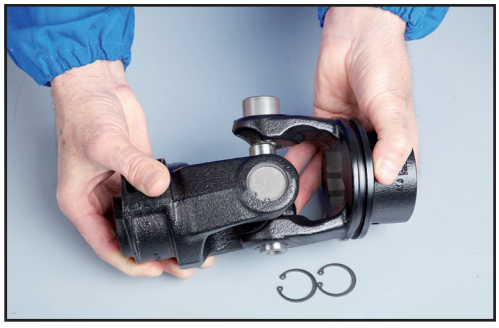

10. Insert a cross kit pin in the free bearing housing and then insert the opposite pin in the previously assembled bearing.

    ATTENTION: as for the Series 100 joints, the cross kit must be installed with the hole of the grease fitting facing towards the inboard yoke.

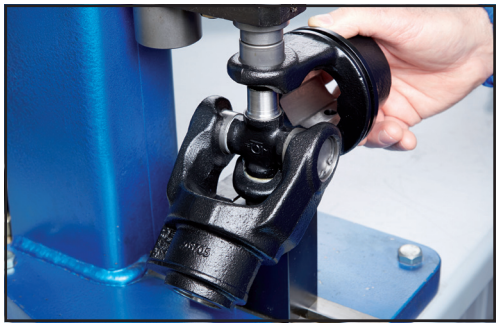

11. Insert the fourth bearing and push it beyond the retaining ring groove, fitting it onto the cross kit pin.
12. Insert and adjust the retaining ring into its groove.



13. Push the third bearing on the opposite side beyond the retaining ring groove.
14. Insert and adjust the retaining ring into its groove.

ASSEMBLY



15. Tighten the grease fitting to the bearing.

    NOTE: as for Series 100 joints, the grease fitting must be installed onto the cross kit body so that the grease fitting is at 45° with respect to the pins.



16. Give a few adjustment strokes on the yoke ears.



17. Lubricate the joint until grease comes out from the bearing seals.

JOINT IDENTIFICATION

The following table allows identifying the 80° CV joint, according to the size of the cross kit and of the CV body.

* The S7-H7 80° CV joint has the same size as the S6, but it is made using a different technology that allows transmitting greater power and which is identified by the initials S7 printed on the CV body.

** The maximum angle of the CV joint, size SH, is 75°.

A_1 mm	H_1 mm	I mm	R mm	SFT	Global	100
22,0	76,0	85	127	**S2**	**G2**	**2**
22,0	86,0	93	140	**S4**	**G4**	**4**
27,0	100,0	112	175	**S6**	**G5-G7**	**6**
27,0	100,0	112	175	**S7-H7***	**- -**	**- -**
30,2	106,0	119	190	**S8-H8**	**G8**	**8**
30,2	122,0	140	202	**S9**	**- -**	**- -**
34,9	112,0	150	202	**SH****	**- -**	**- -**

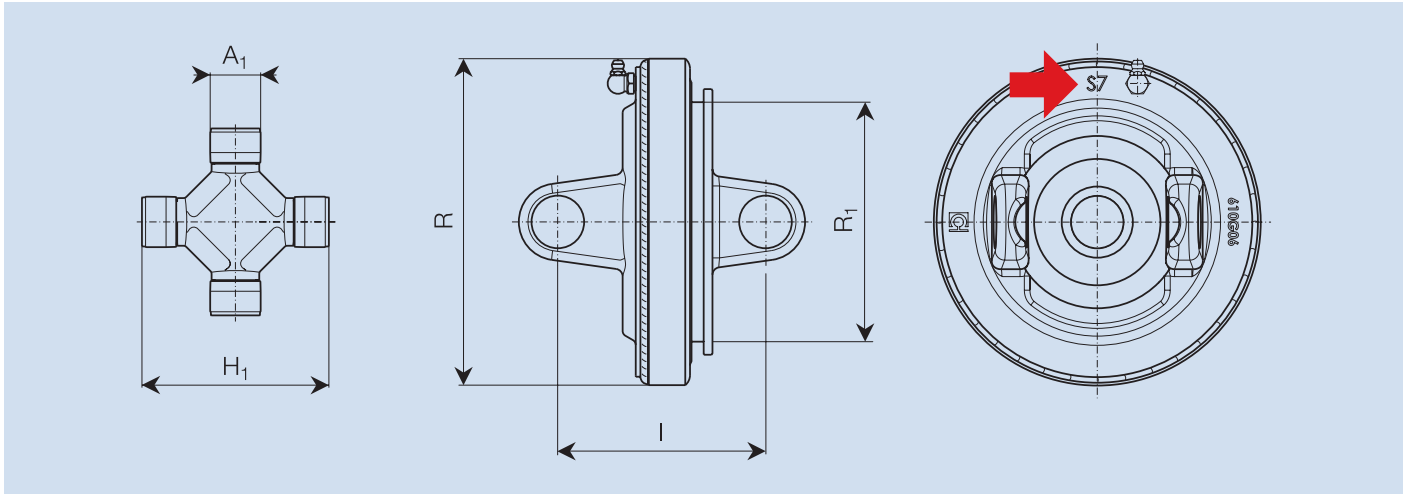

Ref	Description
1	Outer yoke
2	Cross kit body (x2)
3	Needle bearing (x8)
4	Snap ring (x8)
5	Grease fitting (x2)
6	Central housing
7	Grease fitting
8	Inner yoke

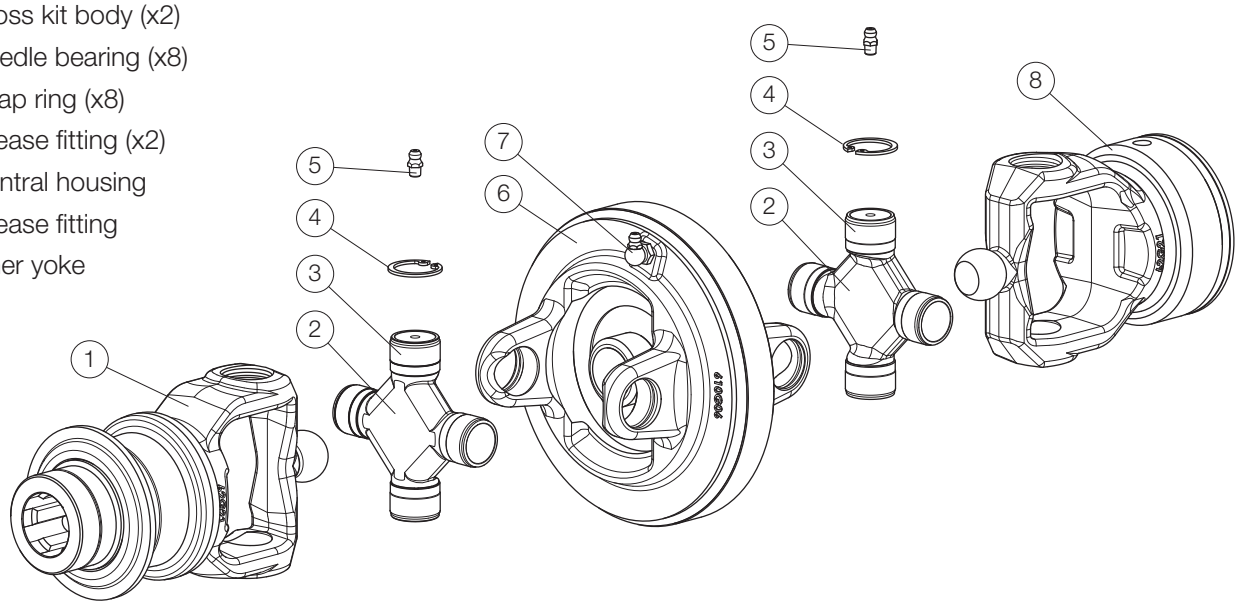

Constant velocity joint 80°

DISASSEMBLY



This procedure shows how to disassemble the outboard yoke of a size 6 Series 100 80° CV joint. The procedure to disassemble the inboard yoke for the pipe is exactly the same.
The components are not painted to allow the images to be clearer.

1. Remove the grease fittings.

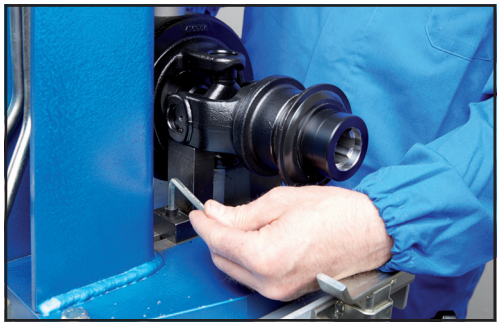

2. Prepare the hydraulic press 398054000 for disassembling the joint.
   - Choose the pressor and the extraction bushing 398074000 suited to the size of the bearing and install them in their proper housings.
   - Loosen the moving blocks and place the joint in such a way that the outboard yoke ears rest onto the two blocks. Align the joint bearing with the bushing. Fasten the rear block.

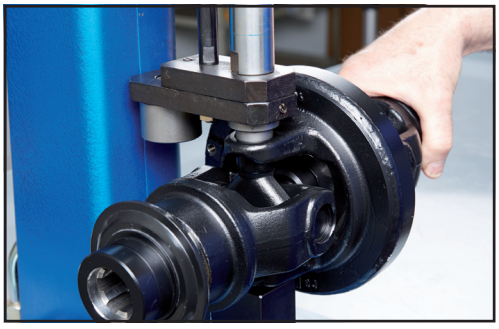

3. Bring the moving block close to the fixed one.
   Use the pressor to move one of the retaining rings installed onto the arms of the body.

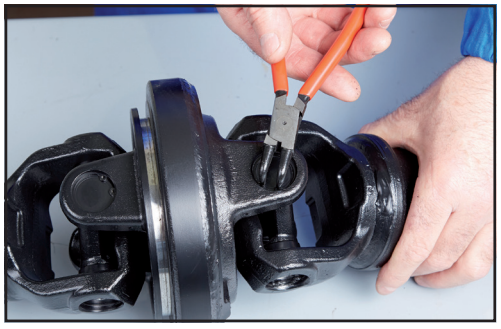

4. Remove the retaining ring using the appropriate pliers.
5. Remove the retaining ring on the opposite side of the body, repeating the procedure in steps 3 and 4.

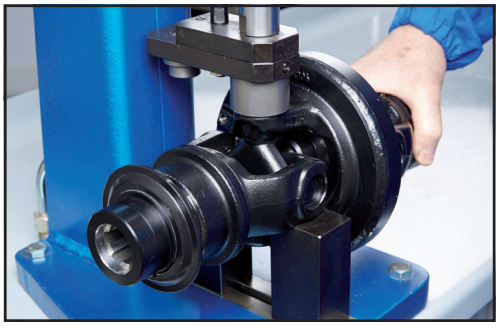

6. Place the extraction bushing.
   Loosen the moving block.
7. Lower the bushing to the bearing housing, ensuring that it is properly centred.
8. Press the yoke ear progressively until the bearing is partly disengaged.
9. Repeat the operations in step 7 and 8 to disengage the bearing on the opposite side.



10. Use clamp 398049000 to tighten the bearing with the appropriate extractor. Extract the bearing hitting the body gently. During this operation, keep the outboard yoke lifted so that the cross kit rests inside the upper bearing.

11. Repeat the procedure to step 10 to remove the opposite bearing.



12. Separate the outboard yoke-cross kit unit from the body.

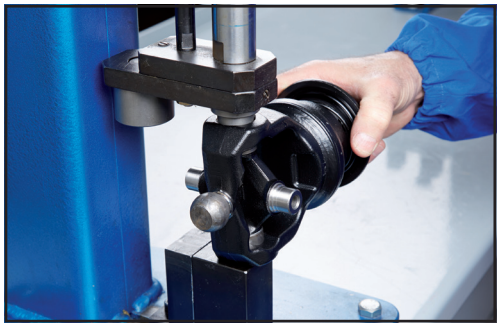

13. To remove the cross kit from the outboard yoke, repeat the procedure from step 3 to step 11.
Finally, remove the cross kit from the unloaded side of the arm.



14. Small burrs may form on the yoke eye fitting surface while disassembling it.
Use a round file to remove burrs, protecting the body centering disc from metal particles that may compromise its proper operation.



15. Use the appropriate gauges to verify bearing housing coaxiality. Verify the state of the cross kit pins and of the yoke centring ball.

Replace any damaged components with original Bondioli & Pavesi spare parts.

Constant velocity joint 80°

ASSEMBLY



This procedure shows how to assemble the outboard yoke of a size 6 Series 100 80° CV joint. The procedure to assemble the inboard yoke for the pipe is exactly the same.
The components are not painted to allow the images to be clearer.

1. Verify that the rollers inside the bearings are in place; apply grease to the bearing rollers.



2. Insert the cross kit into the outboard yoke in such a way that the lowered part of the cross kit body faces towards the yoke centring ball.
   Insert the cross kit from the unloaded side of the yoke ear.



3. Install the bearing with the hole for the grease fitting. Fit it to the cross kit pin and push it partially in its housing, using the press.

   ATTENTION: Install the bearing with the hole onto the inboard yokes, complying with the alignment of the other grease fittings of the cross driveline. The eye of the yoke must be chosen according to the pipe broaching. Pay special attention to drivelines equipped with triangular and Free Rotation pipes. Standard driveline installation diagrams can be found in appendix.

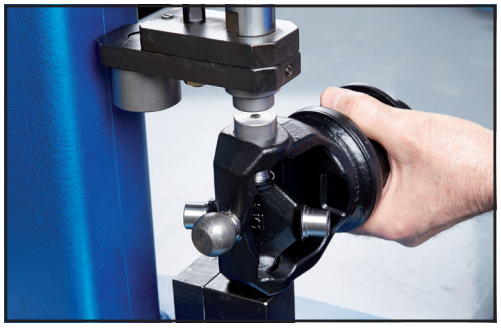

4. Insert the second bearing on the opposite side, aligning it with the cross kit pin. Use the press to push the bearing into the yoke eye, beyond the retaining ring groove.
5. Insert the retaining ring into the groove, making sure that it is firmly positioned.



6. Push the other bearing beyond the retaining ring groove.
7. . Insert the retaining ring into the groove, making sure that it is firmly positioned.



8. Adjust the cross kit, hitting gently on the yoke ears. Ensure that the unit is working properly: The cross kit must rotate evenly in its housing without disturbances.

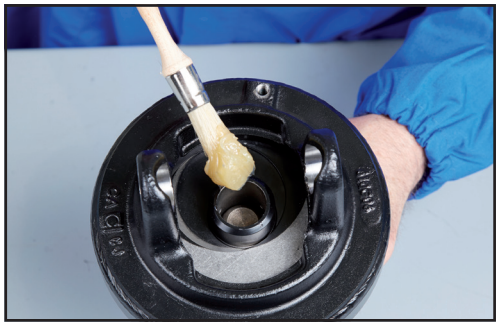

9. Grease the centring ball housing on the body.



10. Install the yoke onto the body, fitting the centring ball and the cross kit pins into their housings.

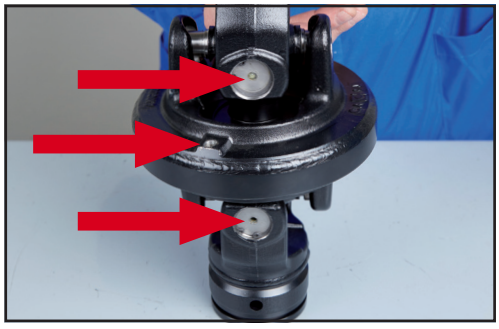

ATTENTION: Comply with the grease fitting housing alignment as shown in the following figure.

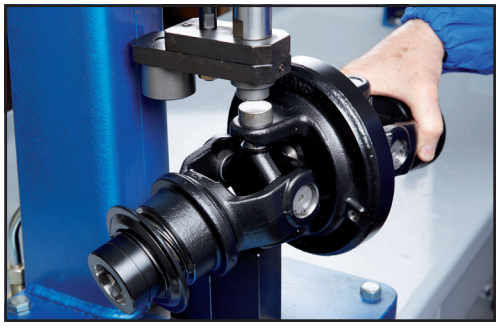

11. Install the remaining bearings, following the procedure described in stages from 3 to 7.

Constant velocity joint 80°

ASSEMBLY

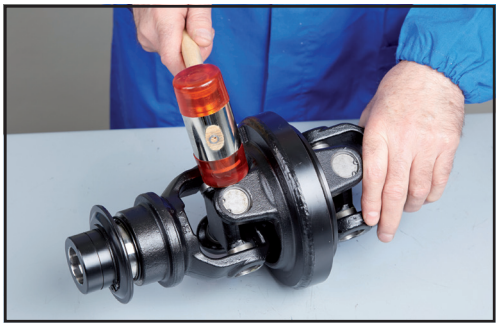

12. Adjust the joints by hitting gently on the body arms. Verify joint articulation. The joint must articulate in all directions without any disturbances.

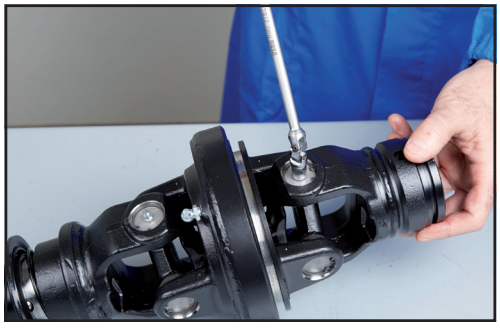

13. Tighten the three grease fittings.

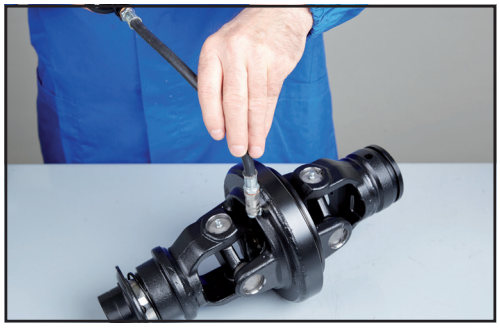

14. Lubricate the joint until grease comes out from the bearing seals. Lubricate the body, using the amount of grease indicated in the specific lubrication diagrams (refer to chapter 3).

    The following table shows the total amount of grease contained in Bondioli & Pavesi CV joint bodies, according to the size of the shaft.

    ATTENTION: Spare bodies supplied individually are not provided with grease. Introduce at least the amount indicated in the table.

Series 100	Series Global	Series SFT	Amount of grease [g]
2	G2	S2	35
4	G4	S4	50
6	G5 - G7	S6 - S7	90
8	G8	S8 - H8	110
-	-	S9	150
-	-	SH	260

JOINT IDENTIFICATION

The following table allows identifying the 50° CV joint, according to the size of the cross kit and of the CV body.

A_1 mm	H_1 mm	R_1 mm	I mm	R mm	Serie 100	Serie SFT
22,0	76,0	101	76	116	**4**	**S4**
27,0	100,0	128	88	142	**6**	**S6-H7**
30,2	106,0	128	88	142	**8**	**S8-H8**
34,9	112,0	146	95	158	**-**	**S9-SH**

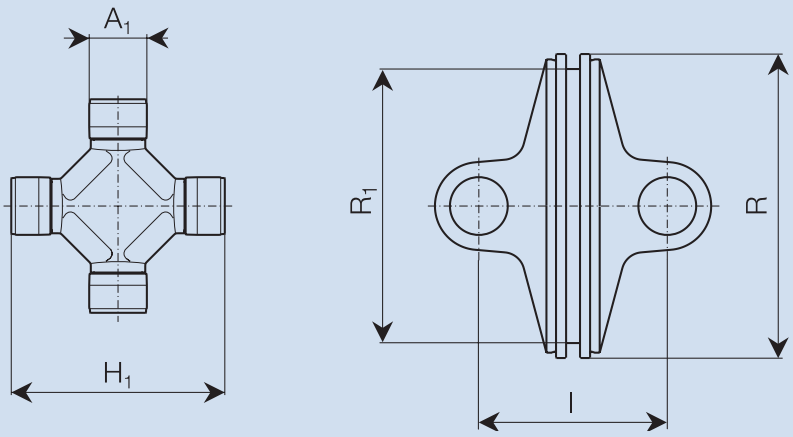

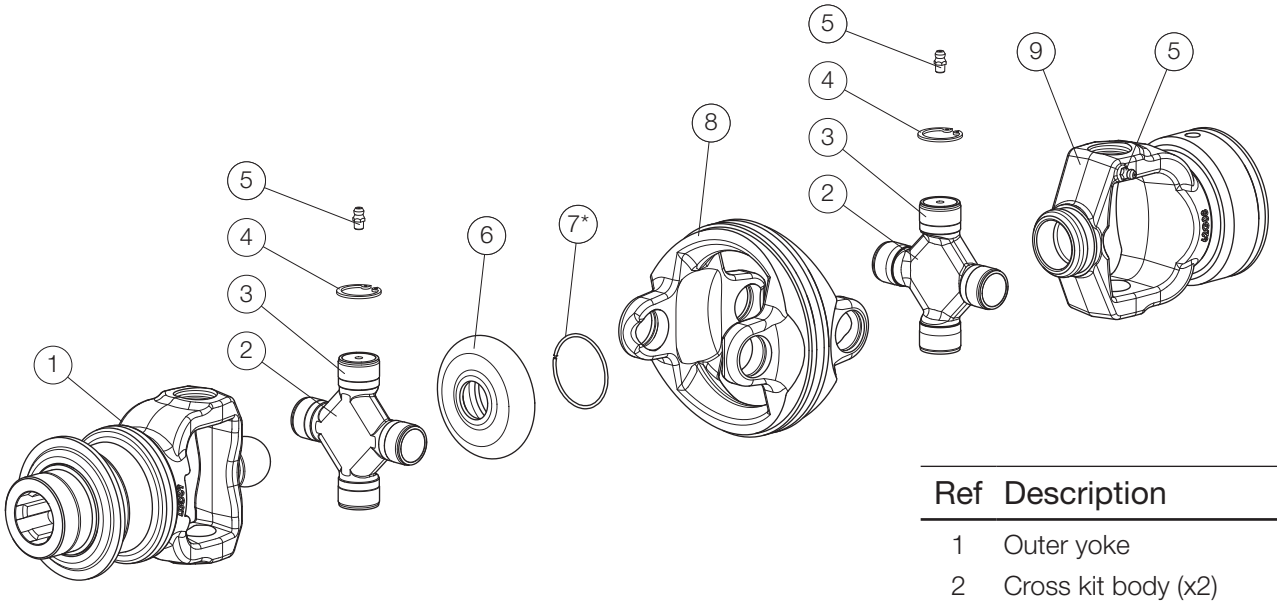

Ref	Description
1	Outer yoke
2	Cross kit body (x2)
3	Needle bearing (x8)
4	Snap ring (x8)
5	Grease fitting (x3)
6	Rubber shield
7*	Reinforcement ring
8	Central housing
9	Inner yoke

* * Component available only for sizes:
Serie 100: 6 - 8
Serie SFT: S6 - S7 - H7 - S8 - H8

Constant velocity joint 50°

DISASSEMBLY

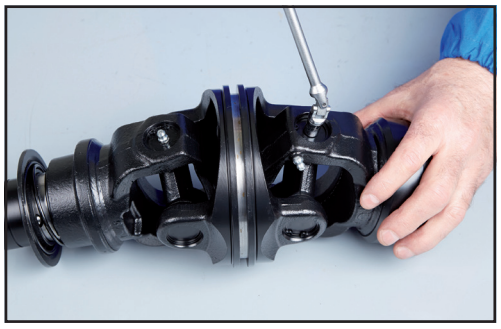

The procedure shows how to disassemble the outboard yoke of size S8 SFT 50° CV joints.
The procedure to uninstall the inboard yoke for the pipe is exactly the same.
The components are not painted to allow the images to be clearer.

1. Remove the 3 grease fittings.



2. Prepare the hydraulic press 398054000 for disassembling the joint.
   - Choose the pressor and the extraction bushing 398074000 suited to the size of the bearing and install them in their proper housings.
   - Loosen the moving blocks and place the joint in such a way that the outboard yoke ears rest onto the two blocks. Align the joint bearing with the bushing. Use an Allen key to fasten the rear block.



3. Bring the moving block close to the fixed one.
   Use the pressor to move one of the retaining rings installed onto the arms of the body.

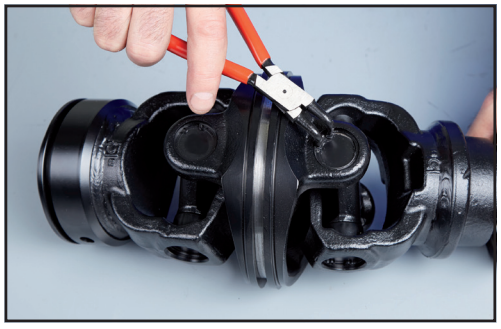

4. Remove the retaining ring using the appropriate pliers.
5. Remove the retaining ring on the opposite side of the inboard yoke repeating the procedure in steps 3 and 4.

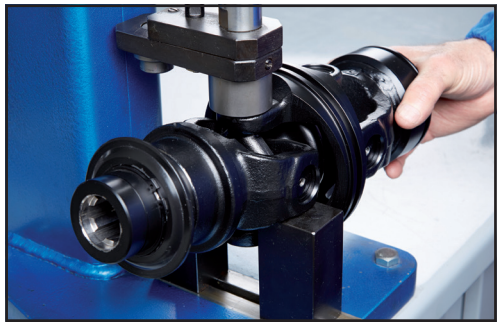

6. Place the extraction bushing.
   Loosen the moving block.
7. Lower the bushing to the bearing housing, ensuring that it is properly centred.
8. Press the yoke ear progressively until the bearing is partly disengaged.
9. Repeat the operations in step 7 and 8 to disengage the bearing on the opposite side.



10. Use the clamp to tighten the bearing with the appropriate extractor. Extract the bearing hitting the yoke ear gently. During this operation, keep the outboard yoke lifted so that the cross kit pin keeps the upper bearing rollers in place.
11. Repeat the procedure to step 10 to remove the opposite bearing.



12. Separate the outboard yoke-cross kit unit from the body.
13. Remove the rubber protection device
    ATTENTION: on joints:
    - Series 100 sizes 6 and 8;
    - SFT sizes S6, S7, H7, S8 and H8;
    there is a reinforcement retaining ring to keep the rubber protection device in its housing on the inboard yoke.

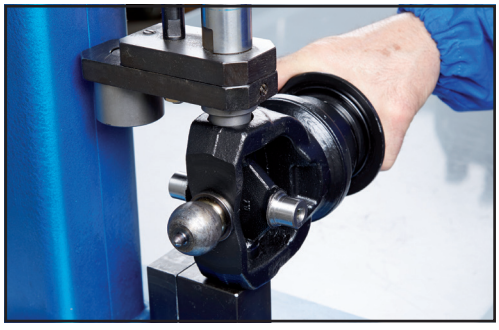

14. To remove the cross kit from the outboard yoke, repeat the procedure from step 3 to step 11.
    Finally, remove the cross kit from the unloaded side of the arm.



15. Small burrs may form on the yoke eye fitting surface while disassembling it.
    Use a round file to remove burrs, protecting the centering ball from metal particles that may compromise the joint's proper operation.



16. Use the appropriate gauges to verify bearing housing coaxiality. Verify the state of the cross kit pins and of the yoke centring ball.

    Replace any damaged components with original Bondioli & Pavesi spare parts.

Constant velocity joint 50°

ASSEMBLY



The procedure shows how to assemble the outboard yoke of size S8 SFT 50° CV joints. The procedure to install the inboard yoke for the pipe is exactly the same.
The components are not painted to allow the images to be clearer.

1. Apply grease to the bearing rollers.



2. Insert the cross kit into the outboard yoke in such a way that the lowered part of the cross kit body faces towards the yoke centring ball.
   Note: The cross kit can be inserted only from the side of the yoke, in correspondence of the eyes, where the ears have been shaped with appropriate discharges to allow this operation.



3. Insert the bearing with the hole for the grease fitting in one of the yoke eyes, ensuring that it is aligned with the cross kit pin, and use the press to fit it partially into its housing.

   ATTENTION: in the pipe inboard yokes, the bearing must be installed with the hole on the ear where the centring ball greasing fitting is to be placed.



4. Insert the second bearing on the opposite side, making sure that it is properly aligned. Use the press to push the bearing into the yoke eye, beyond the retaining ring housing.

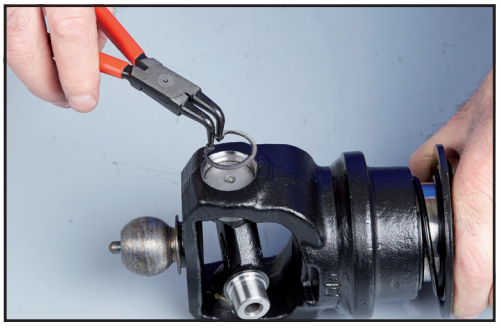

5. Insert the retaining ring into the groove, making sure that it is firmly positioned.
6. Push the second bearing beyond the retaining ring housing.
7. Insert the retaining ring, making sure that it is firmly positioned in its housing.



8. Adjust the cross kit, hitting gently on the yoke ears. Ensure proper operation: The cross kit must rotate evenly in its housing without disturbances.



9. Use a screwdriver to install the rubber protection device onto the outboard yoke. Ensure that the protection device fits properly into its housing.





10. Install the reinforcement retaining rings in the joints:
    - Series 100 sizes 6 and 8;
    - SFT sizes S6, S7, H7, S8 and H8.



11. Grease the centring ball housing on the body.

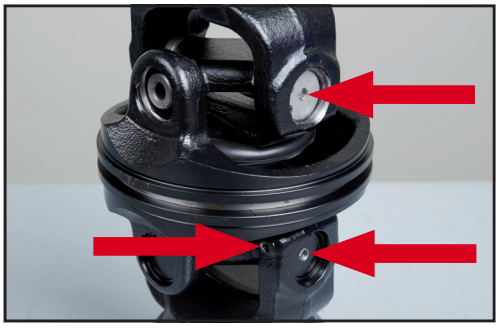

12. Install the yoke onto the body, fitting the centring ball and the cross kit pins into their housings.

    ATTENTION: Comply with the grease fitting housing alignment as shown in the following figure.

Constant velocity joint 50°

ASSEMBLY



13. Install the remaining bearings as shown in phases from 3 to 7.



14. Give a few adjustment strokes on the body arms. Verify joint articulation. The joint must articulate in all directions without any disturbances from the cross kits.





15. Use a finger to push the rubber protection device and the reinforcement retaining ring (if any) into the housing on the inboard yoke.



16. Tighten the three grease fittings.





17. Lubricate the joint until grease comes out from the bearing seals. Grease the centring ball through the grease fitting located on the inboard yoke ear.
Upon greasing the joint, you should be able to see some grease coming out from the discharge under the centring ball housing on the inboard yoke.

IDENTIFYING THE TYPE OF TELESCOPIC PIPES

The Bondioli & Pavesi range of products includes various types of telescopic pipes. The following table shows the identification sizes of the pipes available for the SFT, Global and Series 100 ranges.

Serie SFT

Four-Tooth profile tubes

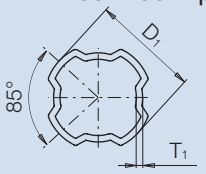

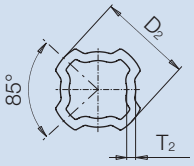

Free Rotation tubes

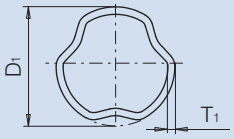

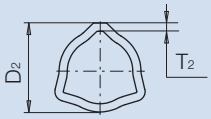

Splined profile tubes

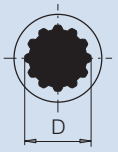

SFT	Normal Processed				Rilsan				Regular				Rilsan				Splined profile tubes	
	D_1 mm	T_1 mm	D_2 mm	T_2 mm	D_1 mm	T_1 mm	D_2 mm	T_2 mm	D_1 mm	T_1 mm	D_2 mm	T_2 mm	D_1 mm	T_1 mm	D_2 mm	T_2 mm	D mm	Z
S1	35,2	2,00	30,8	3,00	- -	- -	- -	- -	- -	- -	- -	- -	- -	- -	- -	- -	- -	- -
S2	45,6	2,75	39,6	3,00	45,6	2,50	40,1	3,25	40,4	3,10	29,0	4,00	40,4	2,85	29,5	4,45	- -	- -
S4	50,2	2,75	44,2	3,50	50,2	2,50	44,7	3,75	48,0	3,35	36,1	4,00	48,0	3,10	36,6	4,25	- -	- -
S5	50,2	2,75	44,2	4,20	50,2	2,50	44,7	4,45	- -	- -	- -	- -	- -	- -	- -	- -	- -	- -
S6	53,9	3,25	46,9	4,50	53,9	3,00	47,4	4,75	58,5	3,60	44,7	4,20	58,5	3,35	45,2	4,45	40	14
S7	53,9	3,25	46,9	4,50	53,9	3,00	47,4	4,75	- -	- -	- -	- -	- -	- -	- -	- -	40	14
H7	58,2	3,25	51,2	5,00	58,2	3,00	51,7	5,25	- -	- -	- -	- -	- -	- -	- -	- -	40	14
S8	58,2	3,25	51,2	5,00	58,2	3,00	51,7	5,25	- -	- -	- -	- -	- -	- -	- -	- -	40	14
H8	66,0	3,50	58,5	4,50	66,0	3,25	59,0	4,75	- -	- -	- -	- -	- -	- -	- -	- -	- -	- -
S9	66,0	3,50	58,5	4,50	66,0	3,25	59,0	4,75	- -	- -	- -	- -	- -	- -	- -	- -	45	16
SH	70,2	4,00	61,7	5,75	70,2	3,75	62,2	6,00	- -	- -	- -	- -	- -	- -	- -	- -	45	16
S0	70,2	4,00	61,7	5,75	70,2	3,75	62,2	6,00	- -	- -	- -	- -	- -	- -	- -	- -	45	16

100 Series and Global Series

Triangle profile tubes

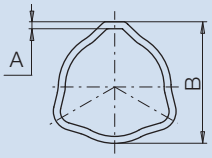

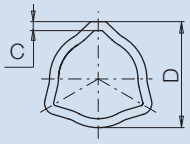

Splined profile tubes

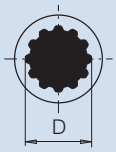

100	Global	Regular				Rilsan				Splined profile tubes	
		A mm	B mm	C mm	D mm	A mm	B mm	C mm	D mm	D mm	Z
1	G1	2,6	32,5	4,0	26,5	- -	- -	- -	- -	- -	- -
2	G2	3,2	36,0	4,0	29,0	2,9	36,0	4,3	29,6	- -	- -
43	G3	3,4	43,5	3,2	36,0	3,1	43,5	3,5	36,6	- -	- -
4	G4	3,4	43,5	4,0	36,0	3,1	43,5	4,3	36,6	30	10
5	G5	3,0	51,5	3,8	45,0	2,7	51,5	4,1	45,6	35	12
6	G7	4,0	54,0	4,2	45,0	3,7	54,0	4,5	45,6	35	12
7	G8	4,0	54,0	5,5	45,0	3,7	54,0	5,8	45,6	40	14
8		4,0	63,0	4,0	54,0	3,7	63,0	4,3	54,6	40	14
8*		4,0	54,0	5,5	45,0	3,7	54,0	5,8	45,6	- -	- -

Telescoping members

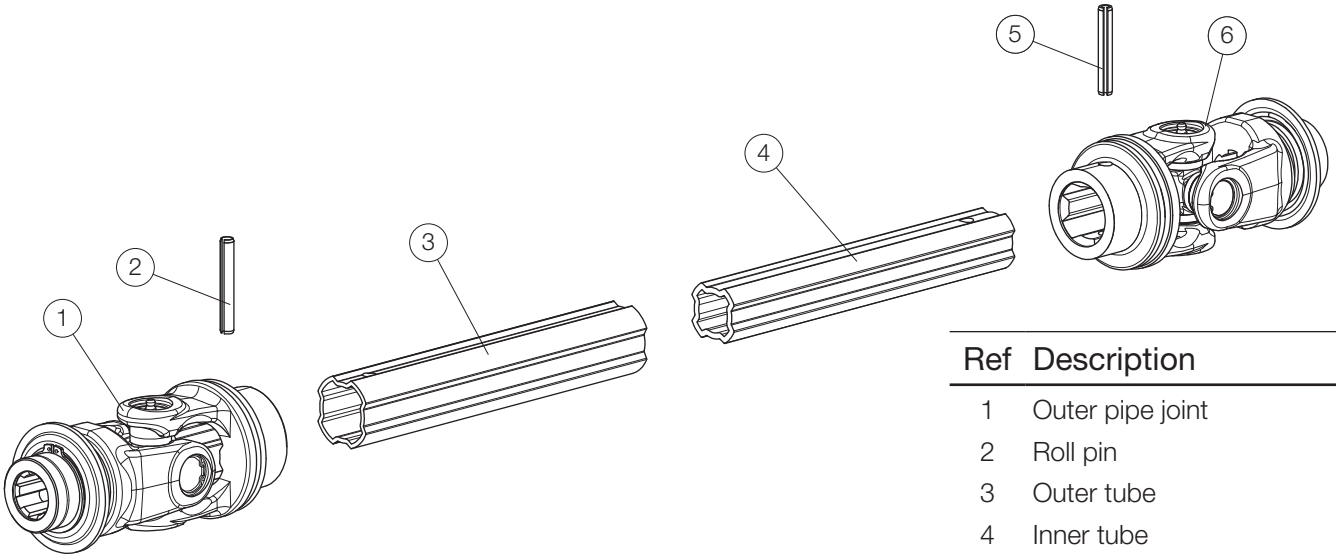

Ref	Description
1	Outer pipe joint
2	Roll pin
3	Outer tube
4	Inner tube
5	Roll pin
6	Inner pipe joint

DISASSEMBLY

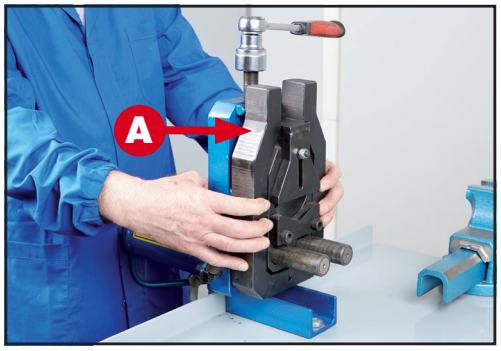

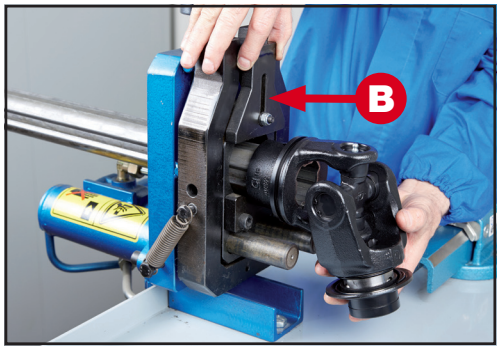

The procedure shows the operations to disassemble an SFT 4-tooth outer pipe.

1. Prepare hydraulic extractor 398034000 in such a way that the bracket (A) rests on the base of the frame.
2. Keeping the moving pawl (B) lifted, insert the pipe into the hydraulic extractor, complying with the following diagrams.

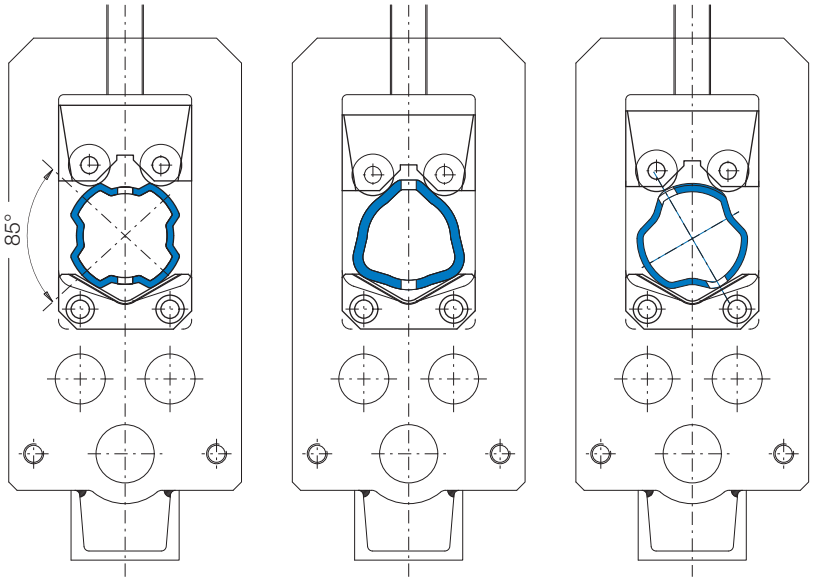

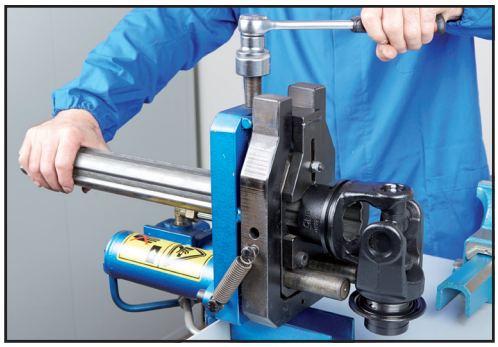

3. Ensure that the moving pawl rests on the pipe. In the event of 4-tooth pipes, the pawl must rest on both the pipe fins.
4. Tighten the pipe by means of the appropriate screw.



5. Use the appropriate pin punch 398014000 to remove the roll pin.

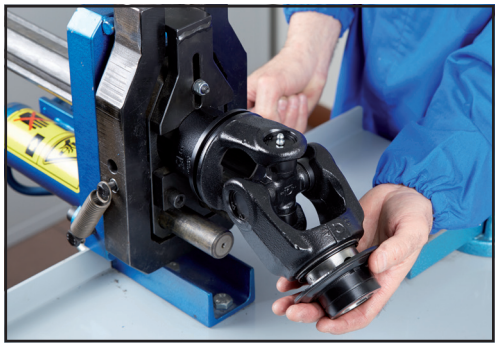

6. Start extracting the joint.



7. Continue until the joint comes out completely.
8. Loosen the fastening screw and free the pipe from the hydraulic extractor.

Telescoping members

ASSEMBLY

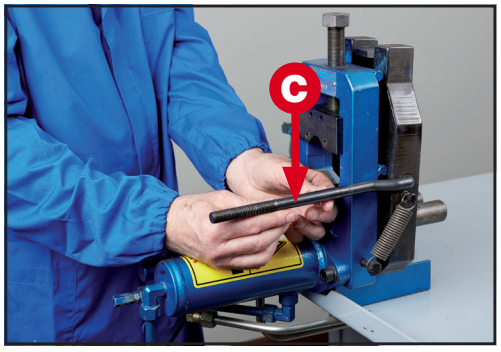

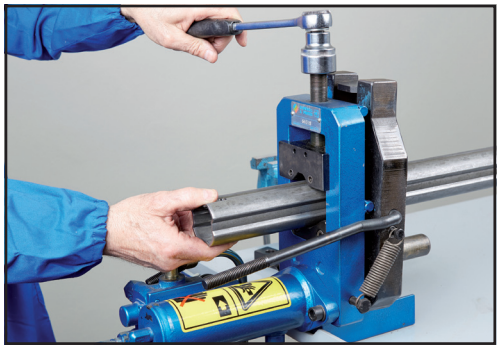

1. Install tie rods (C) in place.
2. Upon cutting and accurately deburring the cardan telescopic pipe, insert it into the extractor, as shown in the image below, so that it protrudes by approximately 90 mm, and tighten it by means of the appropriate screw.

   Note: in Free Rotation pipes, the roll pin hole position depends on the rotation direction of the cardan driveline.
   The driveline installation diagrams to ensure the correct phasing of the yokes and the alignment of the grease fittings can be found in the appendix.

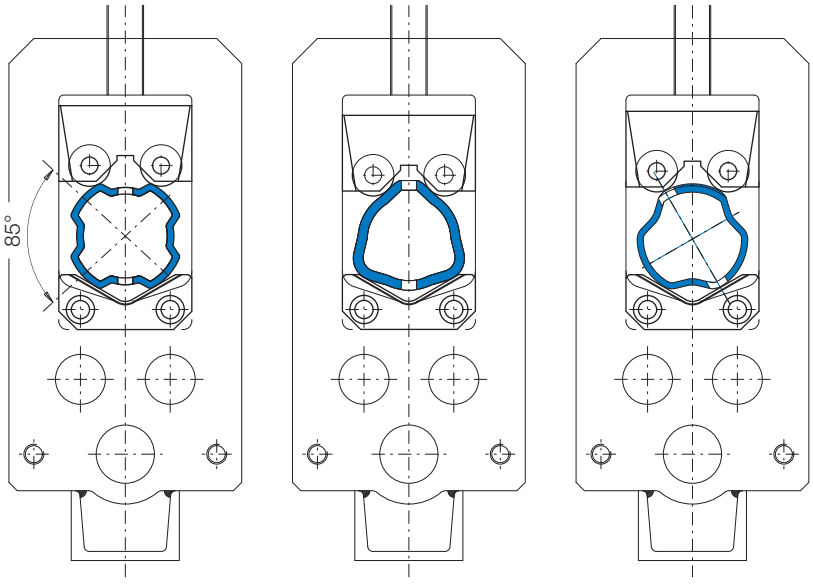

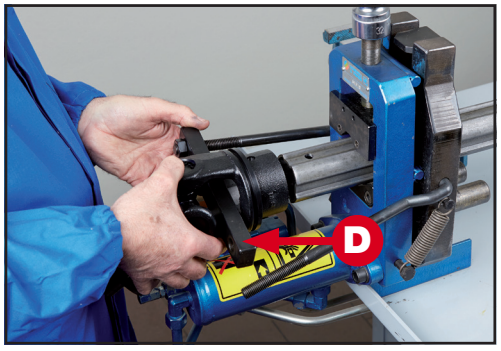

3. Lubricate the yoke hub broaching.
4. Insert the bracket (D) into the joint.

   ATTENTION: Place the joint in such a way as to ensure the proper alignment of the grease fittings in the driveline. Pay special attention to whether the telescopic pipes are equipped with grease fittings. The correct alignment of the standard drivelines is shown in the “Lubrication” chapter.

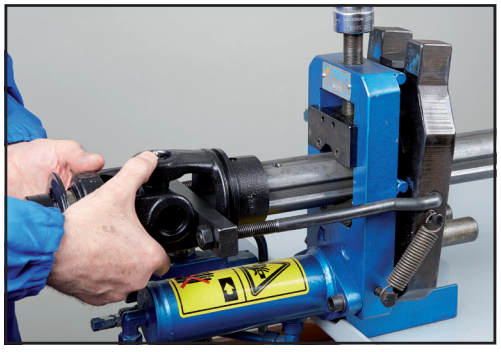

5. Insert tie rods one after the other and screw nuts a little.



6. Use a mallet to fit the joint onto the pipe.
7. Tighten the two nuts, keeping the bracket centred with respect to the yoke.



8. Start insertion, ensuring that the pipe and the inboard yoke are coaxial. Complete assembly avoiding to force the pipe against the bracket at its end-of-travel.



9. Remove the bracket and tie rods.
10. Insert the locking roll pin.

Determining the correct length

To determine the correct length of the driveline, it is advisable to hook the machine to the tractor and place the machine in order for it to be at a minimum distance between the power takeoffs.
Install the two uncoupled and unprotected semi-shafts to their respective PTOs.
At this point, verify any interference of the outer pipe with the yoke inner pipe and establish how much the outer pipe needs to the shortened.

Transported machines

In transported machines, the minimum distance Dmin between the joints occurs when the PTOs are aligned on the vertical plane.
Verify that, in the condition of maximum extension, which generally occurs when the machine is lifted, the coupling between the two pipes is sufficient.

Towed machines

In towed machines, the minimum distance Dmin between the joints occurs during steering.
Verify that, in the condition of maximum extension, which generally occurs when the machine is aligned, the coupling between the two pipes is sufficient.
When determining the minimum and maximum lengths and during subsequent verifications, it is important to bear in mind that ground subsidence may cause further reduction and increase of the distance between the PTOs.

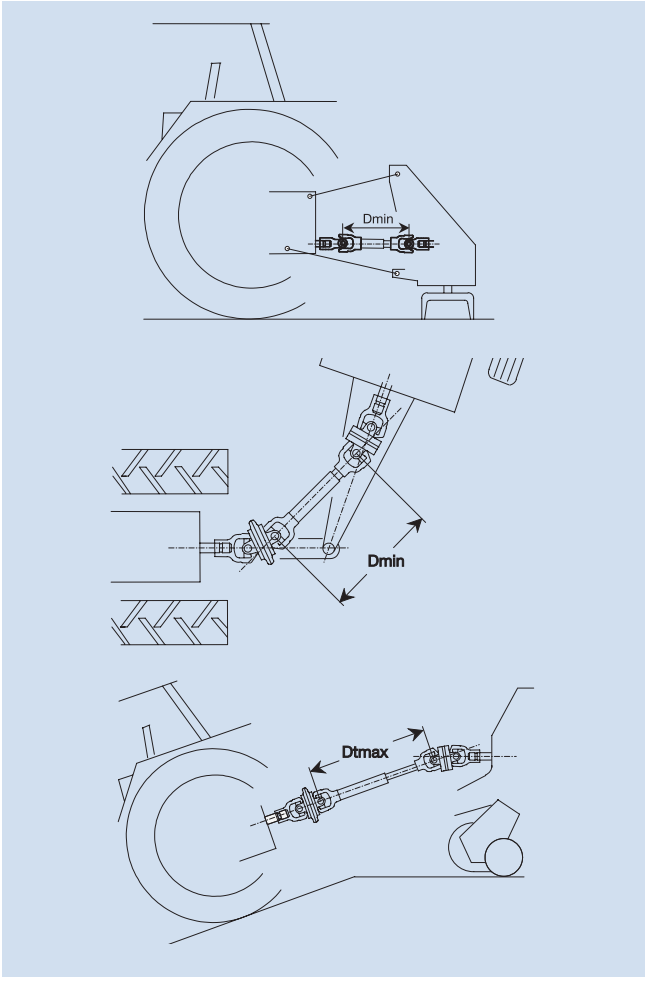



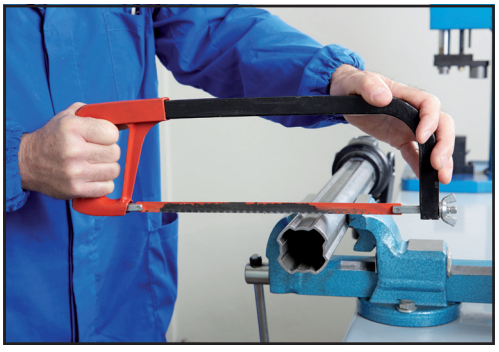

Bondioli & Pavesi does not recommend modifications to its products. If the driveline needs to be shortened, proceed as described below. If you are unsure of the procedure, or need additional assistance, please contact your local implement dealer or qualified service center.

1. Remove shielding.

2. Shorten drive tubes by the required length. In normal conditions, telescoping tubes must always overlap by at least a 1/2 of their length. During manoeuvres, when the driveline is not rotating, the telescoping tubes must have a suitable overlap to maintain the tubes aligned and allow then to slide properly.

   If the driveline is fitted with a single chain restraint system (splined inner tube), the tubes can be shortened by a limited amount (normally no more than 70 mm) to avoid eliminating the splined ring connecting the two shield tubes.

   If the driveline is fitted with a greasing system incorporated in the inner drive tube, the tubes can be shortened by a limited amount to avoid damage to the lubrication system. Carefully measure and shorten each drive tube equally.

How to shorten and driveline

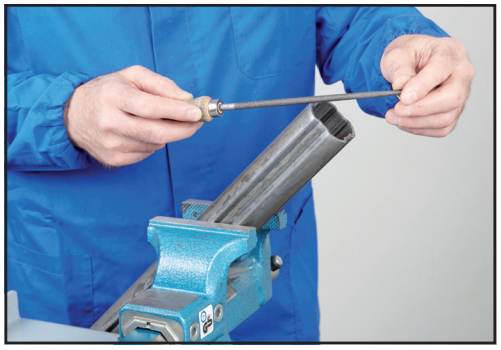

3. Carefully deburr the ends of the tubes with a file and remove any chippings from the tubes.



4. Shorten shield tubes one at time by cutting the same length that was cut from the drive tubes. If the driveline is equipped with Single Chain Restraint System, shortening the driveline will involve removal of the plastic ring which con-nects the shield tubes. If it is necessary to remove this collar, ADD A RETAINING CHAIN TO THE TRACTOR SIDE OF THE DRIVELINE SHIELD.



5. Grease the internal drive tube. Reassemble the shielding on the driveshaft.

   ATTENTION: SFT drivelines with 4-tooth profiles must be reinstalled in such a way that the grease fittings on the cross kit bearings are aligned.

   ATTENTION: by reducing the drivelines equipped with “Free Rotation” profile pipes, the lowering, which prevents the incorrect coupling between the two semi-drivelines, is eliminated.

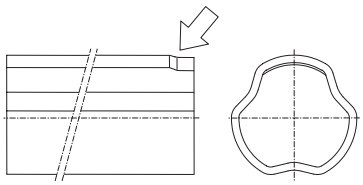

   To prevent uneven motion transmission, the two semi-drivelines must be reinserted in such a way that, under load, the inboard yokes are co-planar and not displaced by 60°.



6. Check the length of the drive shaft at the minimum and maximum positions of the machine. Telescoping tubes must always overlap by at least a 1/2 of their length. During manoeuvres, when the driveline is not rotating, the telescoping tubes must have a suitable overlap to maintain the tubes aligned and allow then to slide properly.

PROTECTING THE DRIVELINE WITH SINGLE CARDAN JOINTS

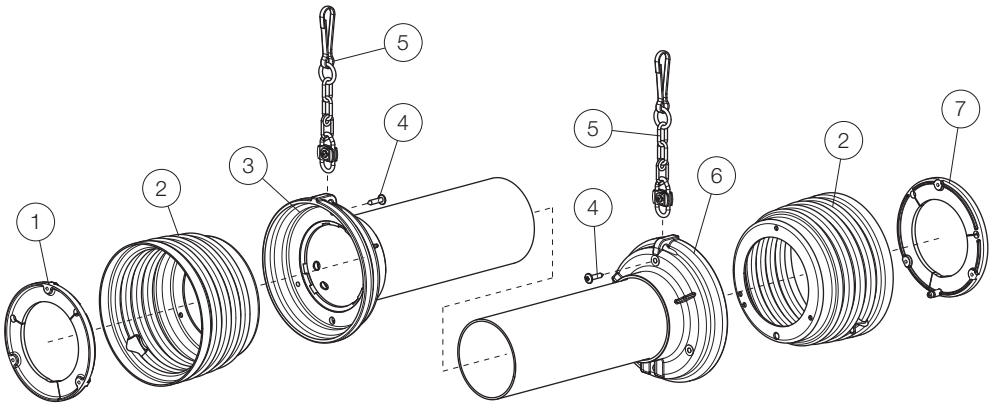

Ref	Description
1	Outer pipe support bearing
2	End shield
3	Taper + outer pipe
4	Self-tapping screws
5	Chain
6	Taper + inner pipe
7	Inner pipe support bearing

DISASSEMBLY



1. Remove the Philips head screws.



2. Remove the base cone and the shield tube.



3. Remove the outer cone and the bearing ring.

SFT range protection device

ASSEMBLY



1. Grease the bearing groove on inner yokes.



2. Fit the bearing ring into the yoke groove with the grease fitting facing the drive tube.



3. Install the outer cone, inserting the grease fitting through the proper hole.



4. Install the base cone and shield tube.

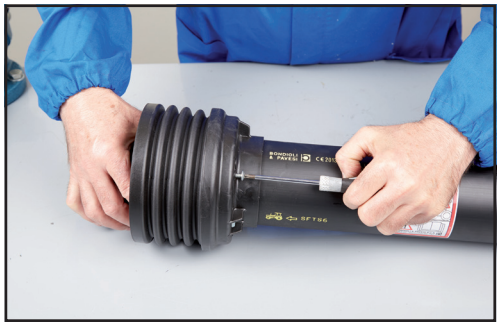

5. Tighten the Philips head screws.
   Use of electric powered screwdrivers is not recommended.

PROTECTING THE DRIVELINE WITH CV JOINTS

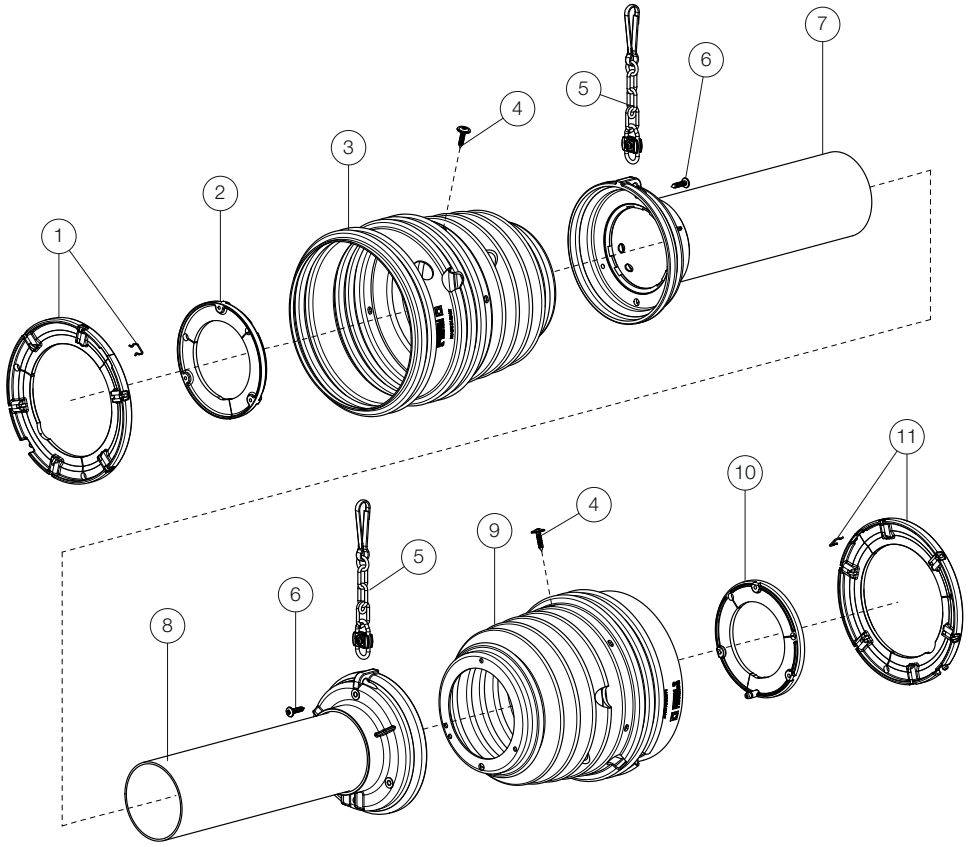

Ref	Description
1	Support bearing for 80° CV joints with retaining spring
2	Outer pipe support bearing
3	Shield for 80° joint
4	Flanged screw
5	Chain
6	Self-tapping screw
7	Taper + outer pipe
8	Taper + inner pipe
9	Shield for 50° joint
10	Inner pipe support bearing
11	Support bearing for 50° CV joints with retaining spring

DISASSEMBLY



1. Remove the screws arranged radially around the circumference of the CV cone.

DISASSEMBLY



2. Remove the screws from the base cone.



3. Remove the base cone and the shield tube.



4. Remove the CV cone.



5. Disengage the retaining spring, leaving it inserted in one of the two holes of the bearing ring to avoid losing it.

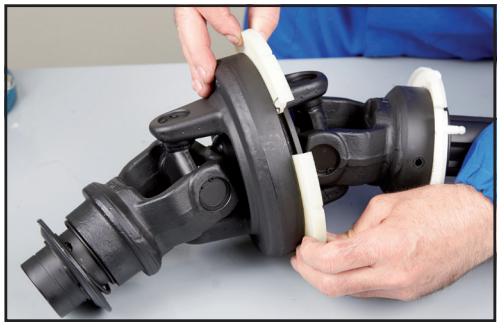

6. Spread the bearing rings and remove from their groove.

ASSEMBLY

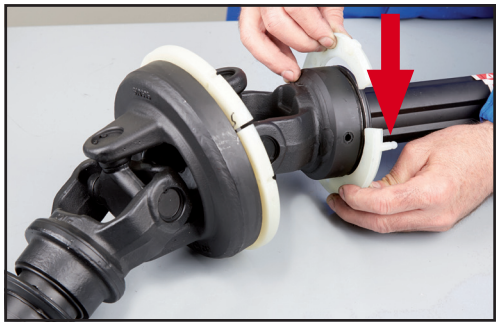

1. Grease the bearing grooves. Fit the bearing ring into the yoke groove with the grease fitting facing the drive tube.

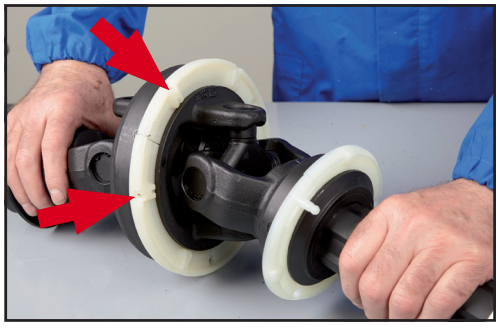

2. Install the bearing ring on the CV body with the reference pins facing the inner yoke.
   The bearing ring is equipped with a grease fitting, used only for 50° CV joints.
   This grease fitting is not used with 80° CV joints.



3. Connect the retaining spring to the two edges of the bearing ring.

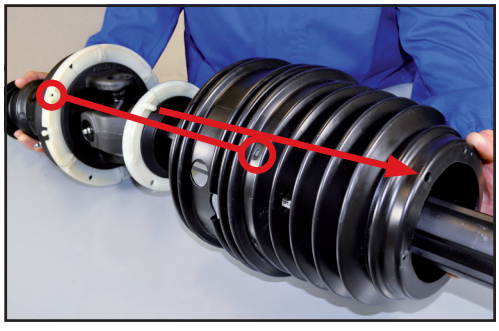

4. Slide the CV cone onto the CV body and align the radial holes with the bea-ring ring reference pins. Align the hole at the base of the CV cone with the grease fitting on the smaller bearing ring.

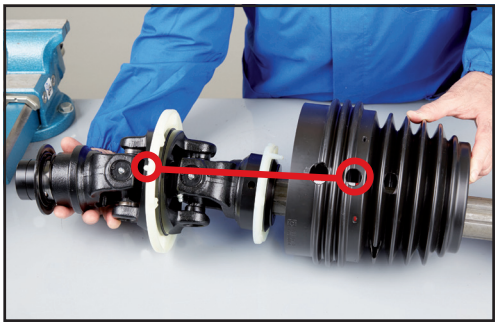

5. In the case of 50° CV joints only: insert the shield strip, aligning with the elements specified in point 4, and also the additional hole of the shield strip with the grease fitting of the large ring.

ASSEMBLY



6. Ensure that the radial holes of the CV cone are aligned with the holes on the reference pins of the bearing ring.



7. In the case of 50° CV joints only: Ensure that the radial holes of the shield strip are aligned with the holes on the reference pins of the bearing ring and that the access hole on the CV cone is aligned with the grease fitting of the bearing ring.

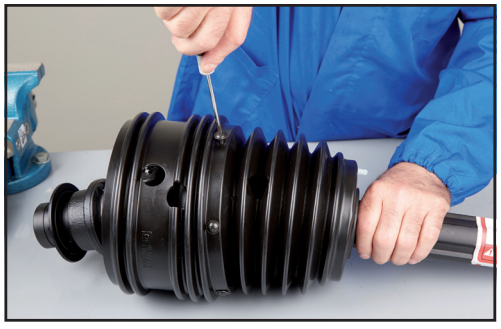

8. Tighten the 6 flange head screws of the protection strip.
   The use of an electric screwdriver is not recommended.



9. Fit the base cone and tube, inserting the grease fitting in the hole on the base cone.



10. Tighten the 3 screws.
    Use of electric powered screwdrivers is not recommended.

PROTECTING THE DRIVELINE WITH SINGLE CARDAN JOINTS

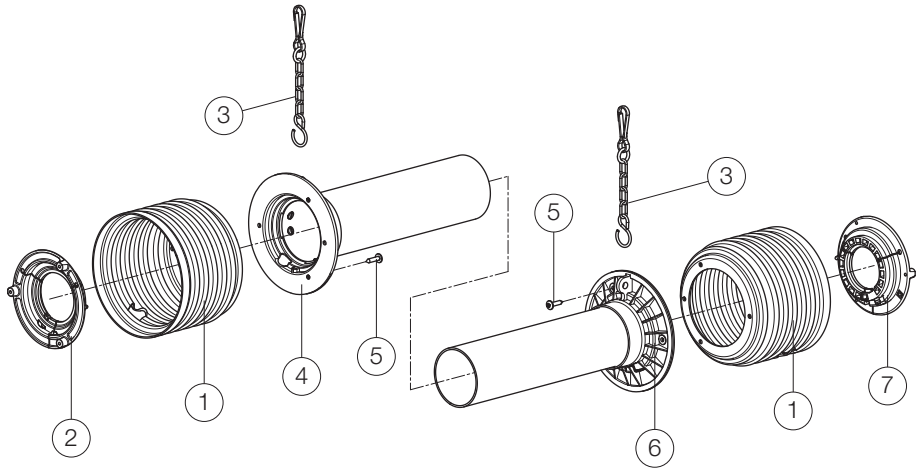

Ref	Description
1	Flexible shield
2	Outer pipe support bearing
3	Chain
4	Taper + outer pipe
5	Self-tapping screws
6	Taper + inner pipe
7	Inner pipe support bearing

DISASSEMBLY



1. Remove the Philips head screws.



2. Remove the base cone and the shield tube.

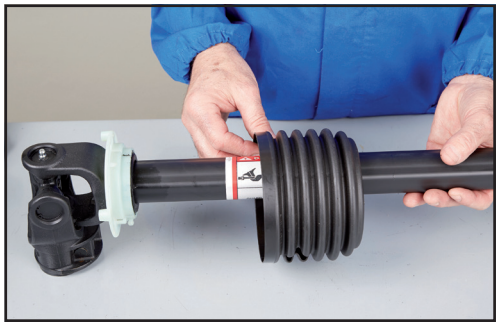

3. Remove the outer cone and the bearing ring.

Global range protection device

ASSEMBLY

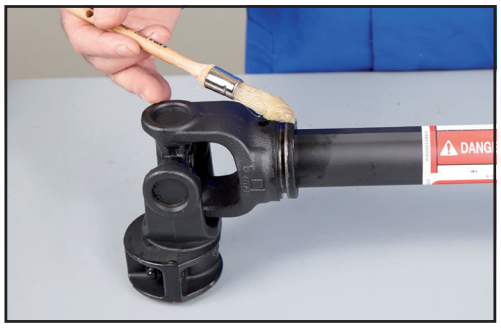

1. Grease the bearing groove on inner yokes.

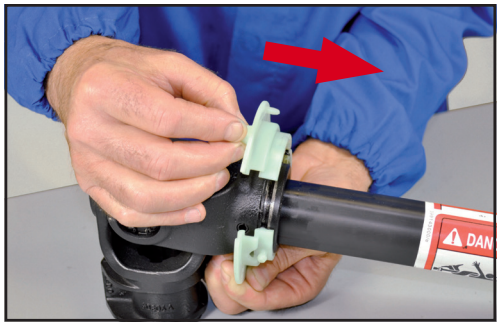

2. Fit the bearing ring into the groove with the reference pin facing the drive tube.



3. Fit the outer cone, inserting the reference pin of the bearing in the hole provided in the cone.

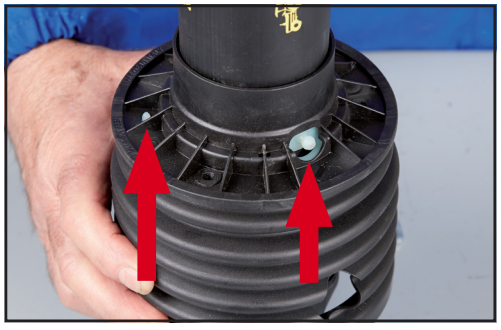

4. Fit the base cone with the tube, inserting the reference pin and the grease fitting of the bearing in the holes provided in the cone.



5. Tighten the Philips head screws. Use of electric powered screwdrivers is not recommended.

PROTECTING THE DRIVELINE WITH CV JOINTS

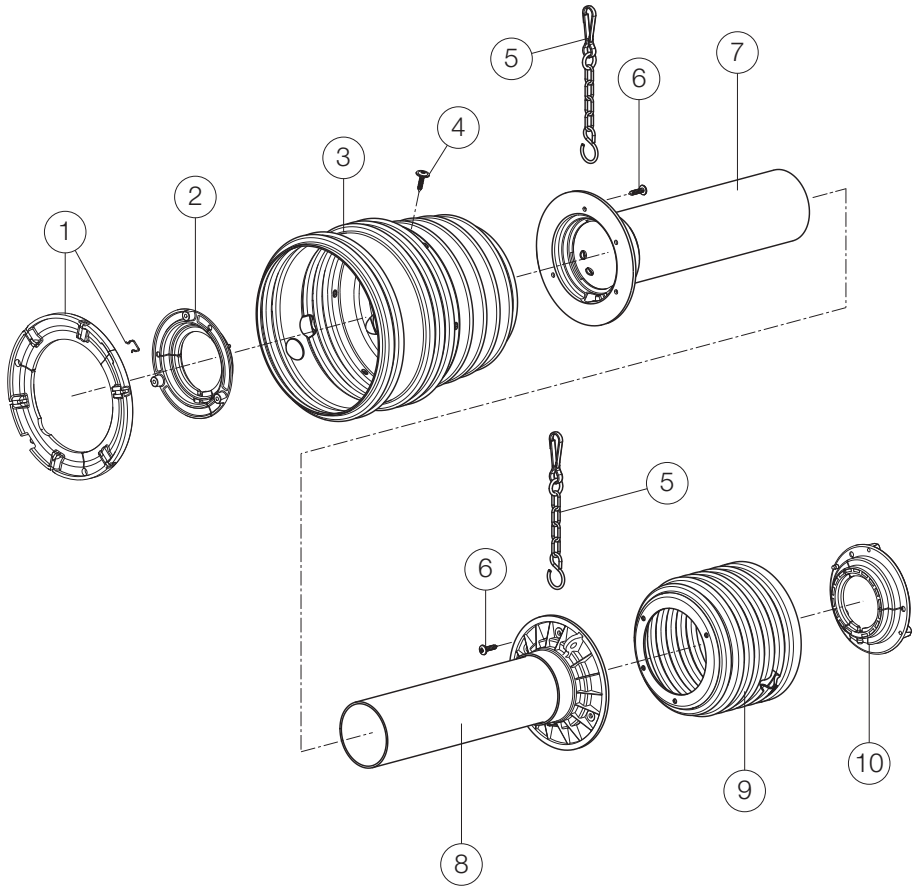

Ref	Description
1	Support bearing for 80° CV joints with retaining spring
2	Outer pipe support bearing
3	Shield for 80° joint
4	Flanged screw
5	Chain
6	Self-tapping screw
7	Taper + outer pipe
8	Taper + inner pipe
9	Flexible shield
10	Inner pipe support bearing

DISASSEMBLY



1. Remove the screws arranged radially around the circumference of the CV cone.

DISASSEMBLY



2. Remove the screws from the base cone.

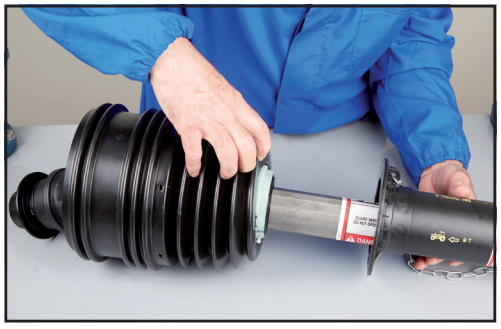

3. Remove the base cone and the shield tube.

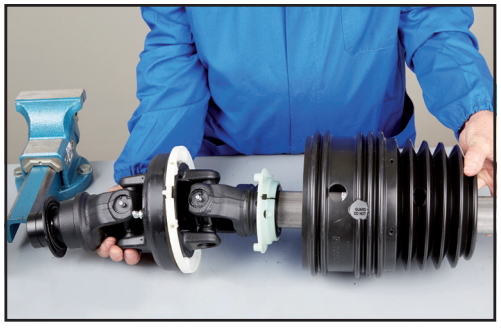

4. Remove the CV cone.



5. Disengage the retaining spring, leaving it inserted in one of the two holes of the bearing ring to avoid losing it.

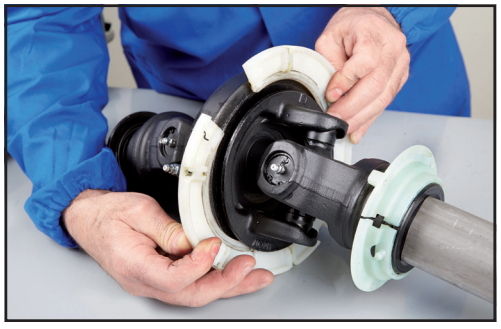

6. Spread the bearing rings and remove from their groove.

ASSEMBLY

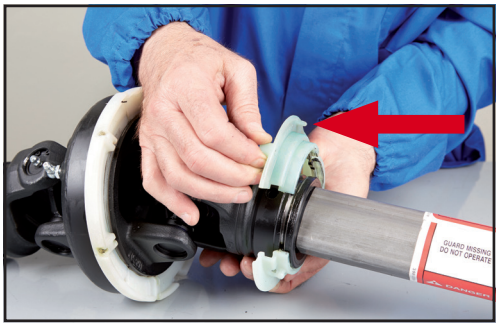

1. Grease the seats and install the shield support bearings.Fit the bearing ring onto the inner yoke with the reference pin facing the drive tube.

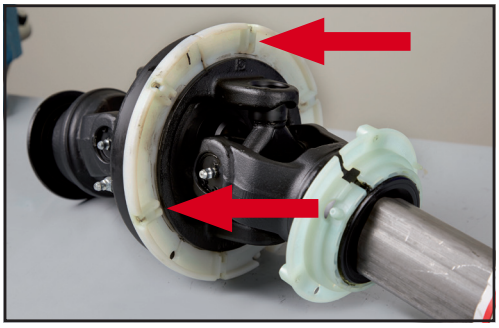

2. Install the bearing ring on the CV body with the reference pins facing the inner yoke. The bearing ring is equipped with a grease fitting, used only for 50° CV joints. This grease fitting is not used with 80° CV joints.



3. Connect the retaining spring to the two edges of the bearing ring.

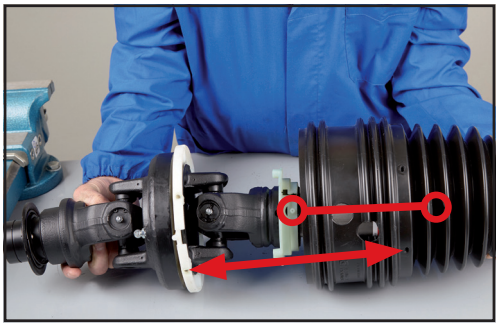

4. Insert the shield aligning the radial holes with the reference pins of the bearing ring and the hole on the bottom with the reference pin of the small bearing. The grease fitting of the bearing must be aligned with the holes on the shield.



5. Check that the radial holes in the shield are aligned with the holes in the reference pins of the bearing ring and that the reference pin is inserted. Tighten the 6 flanged screws of the shield. Use of an electric screwdriver is not recommended.

ASSEMBLY

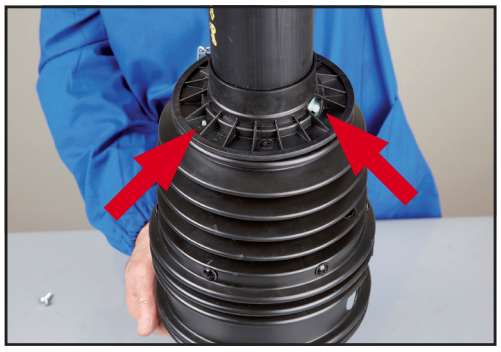

6. Fit the base cone with the tube, inserting the reference pin of the bearing in the hole provided in the base cone. The grease fitting of the bearing is in the hole of the base cone.



7. Tighten the 3 screws. Use of electric powered screwdrivers is not recommended.

PROTECTING THE DRIVELINE WITH SINGLE CARDAN JOINTS

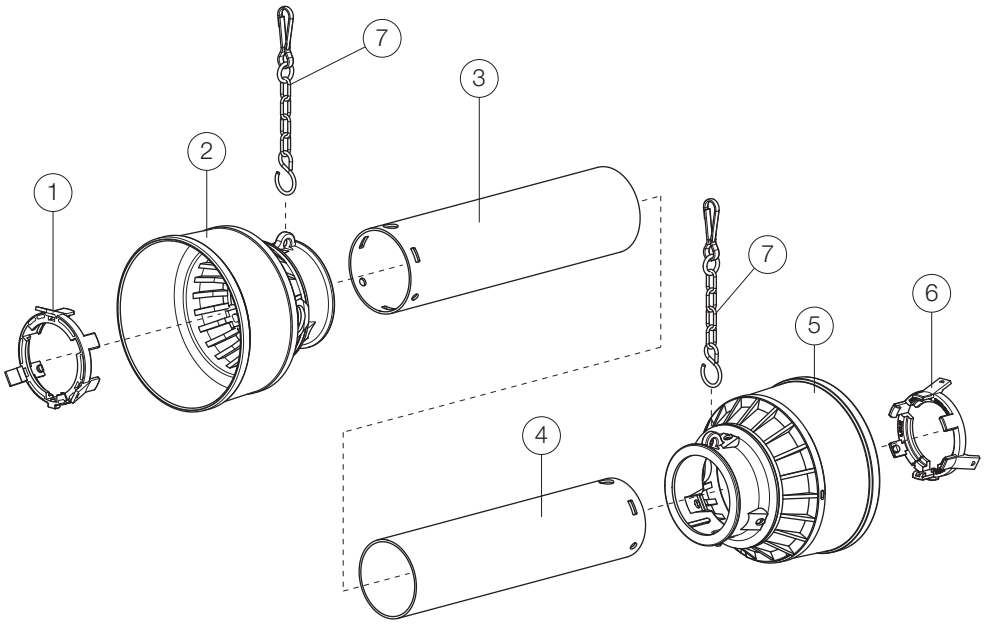

Ref	Description
1	Outer pipe support bearing
2	Outer funnel + flexible shield
3	Outer pipe
4	Inner pipe
5	Outer funnel + flexible shield
6	Inner pipe support bearing
7	Restraint chain

DISASSEMBLY



1. Press the cone downwards and disengage the tabs by exerting pressure with a screwdriver.



2. Open the ring to completely disengage the shield tube.

Series 100 protection device

ASSEMBLY



1. Grease the bearing groove on the inner yokes.



2. Insert the shield tube, aligning the slots with the protrusions on the bearing.

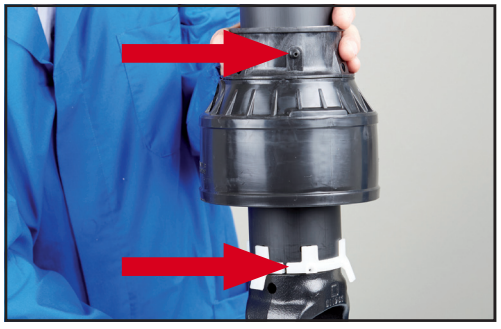

3. Insert the cone. aligning the grease fitting with the bearing grease boss. Engage the two parts with a forceful maneuver and apply pressure.



4. Check that the three tabs are perfectly engaged by tapping lightly.

PROTECTING THE DRIVELINE WITH 80° AND 50° CV JOINTS

Ref	Description
1	Support bearing for 80° CV joints with retaining spring
2	Outer funnel support bearing
3	CV joint outer pipe funnel
4	Restraint chain
5	Chain hook
6	Flanged screws
7	Shield for 80° CV joint
8	Outer pipe
9	Inner pipe
10	Shield for 50° CV joint
11	CV joint inner pipe funnel
12	Inner funnel support bearing
13	Support bearing for 50° CV joints with retaining spring

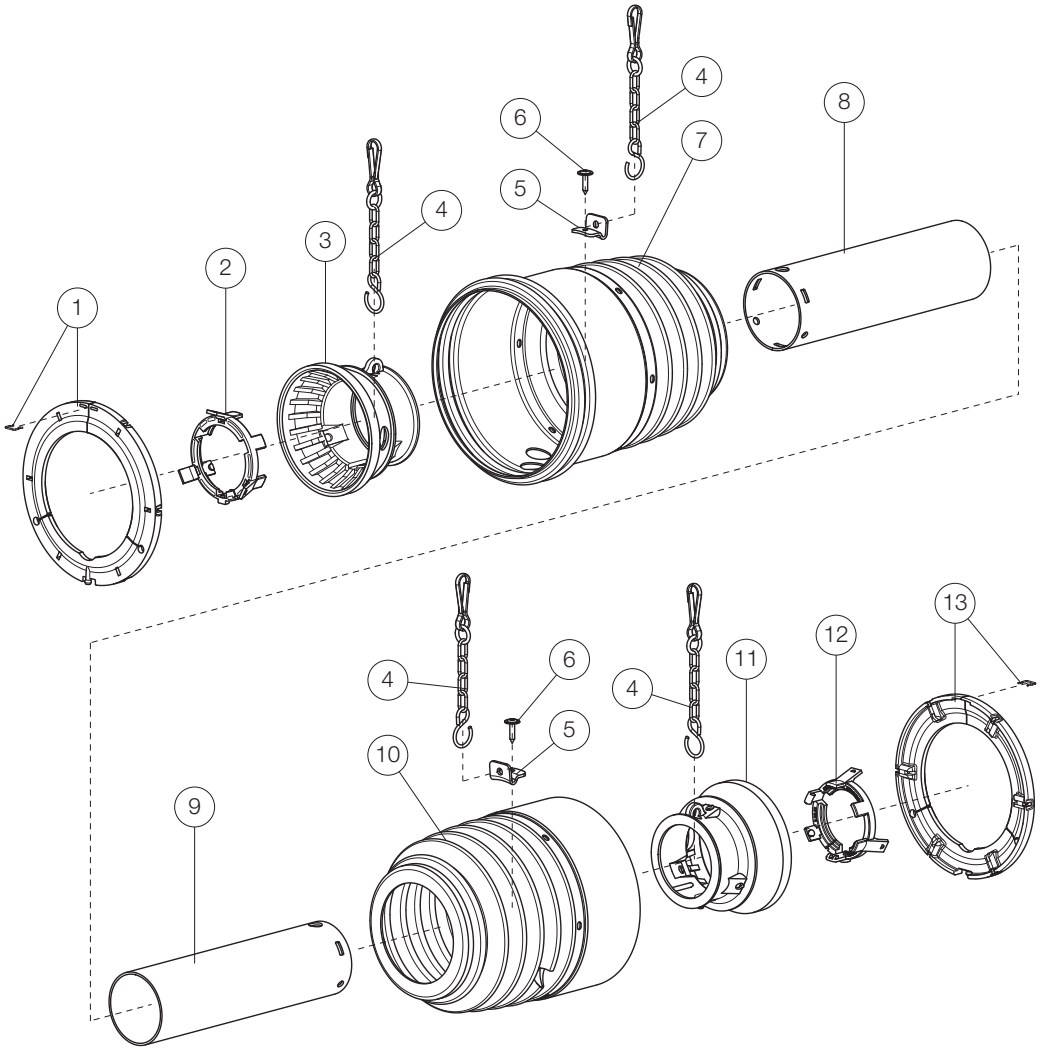

DISASSEMBLY

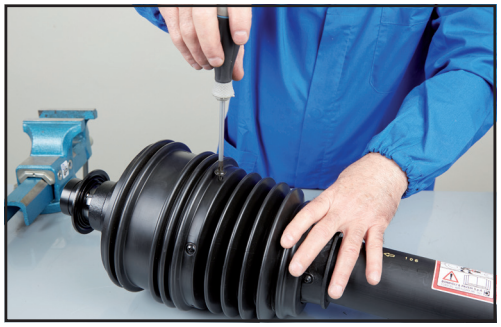

1. Unscrew the shield cone screws.

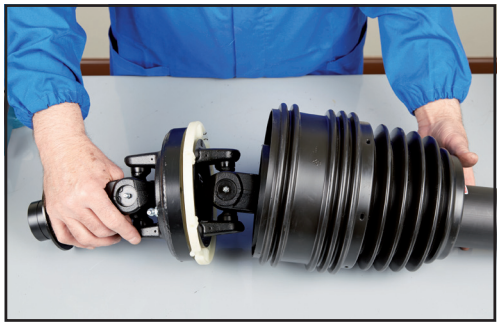

2. Slide off the shield cone. For size 8, the CV shield cone is interlocked with the base cone, must be disengaged before disassembly.



3. Disengage the retaining spring, leaving it inserted in one of the two holes of the bearing ring to avoid losing it.

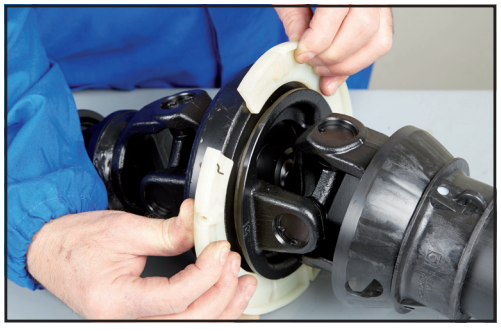

4. Spread apart the shield support rings and remove them from their grooves.

ASSEMBLY



1. Grease the groove and fit the shield bearing ring.Install the bearing ring on the CV body with the bosses facing the inner yoke. The ring is equipped with a grease fitting, which is utilized only for 50° constant velocity joints. Disregard the grease fitting of the bearing for 80° joint shields.



2. Connect the retaining spring to the two edges of the bearing ring.

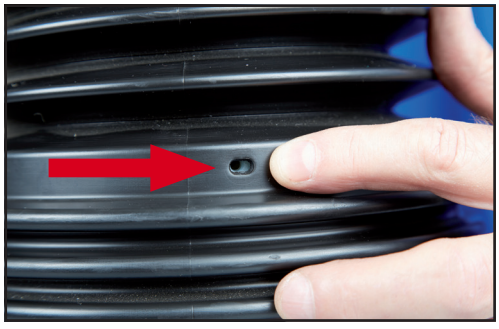

3. Insert the shield cone, aligning the radial holes with the bearing ring bosses.

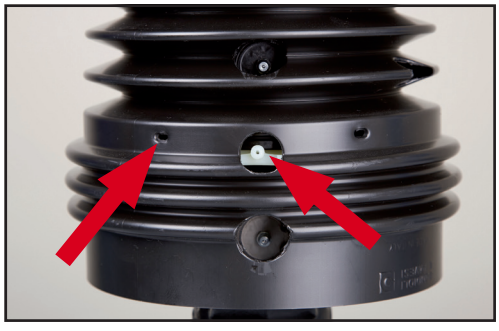

4. Only for 50° constant velocity joints: check that the radial holes of the shield cone are aligned with the holes in the bearing ring bosses and that the additional hole in the shield cone is aligned with the grease fitting in the bearing ring.

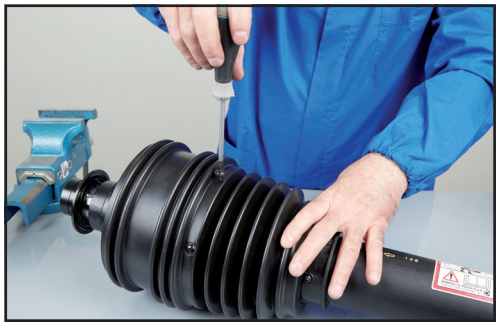

5. Tighten the 6 flange head screws of the protection strip. Refit the fixing plate for the chain. The use of an electric screwdriver is not recommended.

Series 100 protection device

PROTECTING THE DRIVELINES WITH TYPE 650-660-670 CV JOINTS

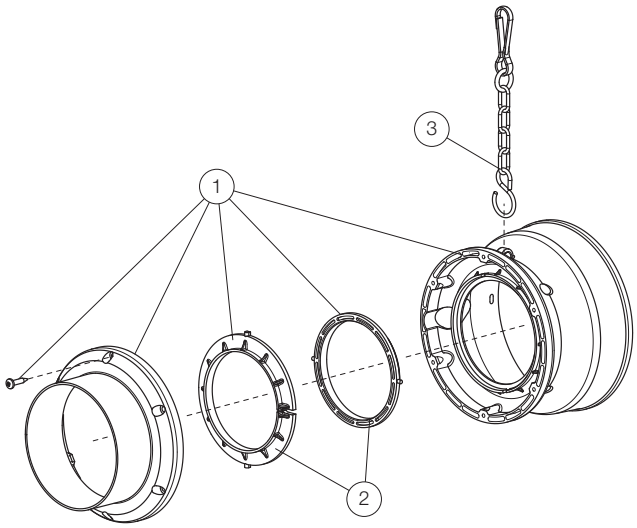

Ref	Description
1	Shield equipped with fastening screws and support bearings
2	Support bearings
3	Restraint chain

DISASSEMBLY

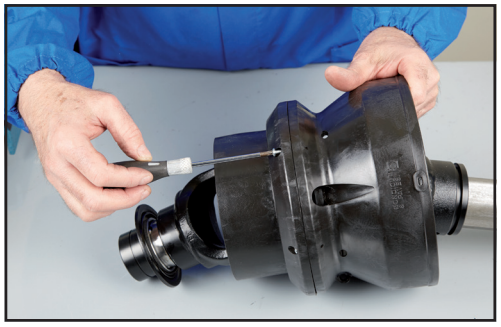

1. Remove the half-shell fixing screws with a screwdriver.

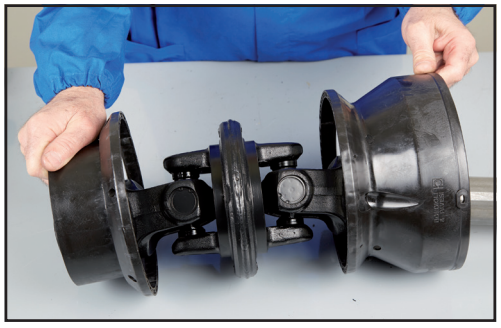

2. Separate the half-shells and slide them off the joint.
   Check the components and replace any worn parts.

ASSEMBLY

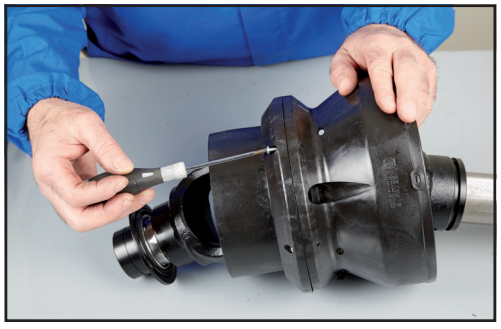

1. Lubricate the races on the joint central body.
   Position the support bearings and the half-shells on the joint and fix them with the relative screws.

Restraint standards and regulations

UNI EN ISO 5674 standards state that restraints must withstand a load of 400 N, and must detach at the end attached to the shield at loads of under 800 N.
ASAE S522 standards specify proper functioning at a load of 400 N and separation at the shield end.
Bondioli & Pavesi cardan drivelines are available with two types of chains:
- Chains with S-hook;
- Chains with Spring Link.

Both S-hook and Spring Link connections separate the chain from the shield in compliance with UNI EN ISO 5674 and ASAE S522.
If the chain detaches, a chain with S-hook needs to be replaced, while the Spring Link can be put back as shown in the following page.

Chains with:	SFT Series	100 Series Global Series
S-hook	up to size S5	All sizes
Spring Link	from size S6	optional

Spare parts codes:

- Chains with S-hook.....**252000050R02**;
- Chains with Spring Link.....**252000101R02**.

Both codes refer to packages containing two chains each.

CHAINS WITH S-HOOK: spare part code **252000050R02**

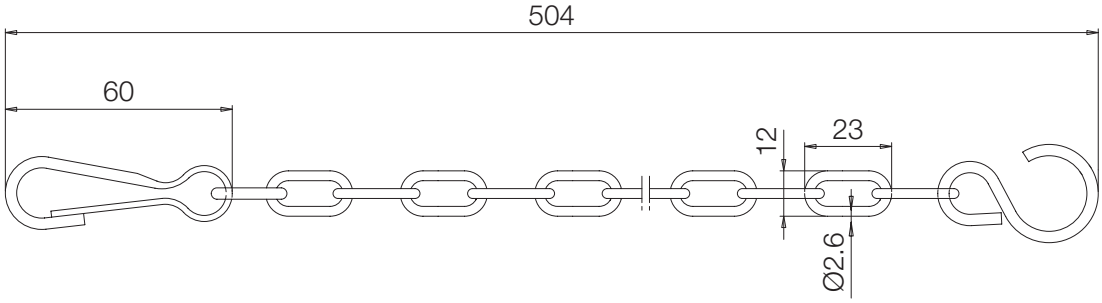

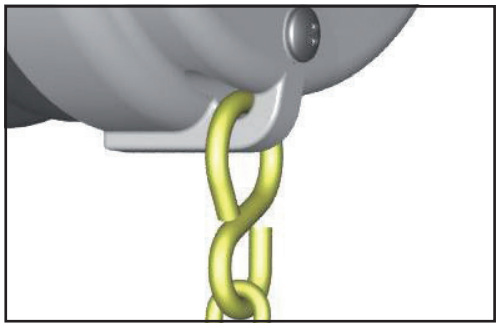

If the connection S-hook is opened and the chain is detached from the protection device, the chain must be replaced.
The S-hook of the new chain is fastened to an eyelet on the cone and must be closed and round to prevent unintended detachment.

Restraint chains

CHAINS WITH “SPRING LINK”: spare part code **252000101R02**

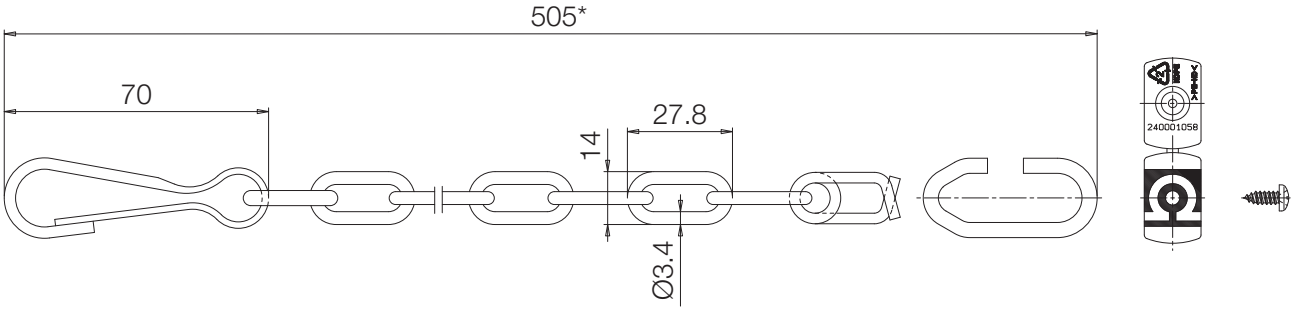

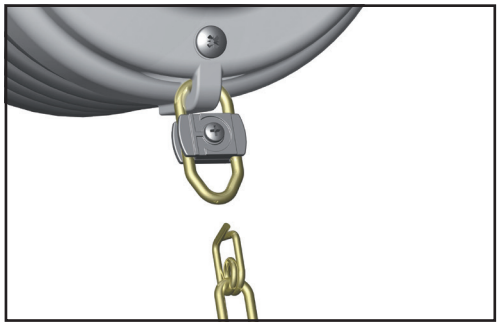

If this spring hook is detached from the fastening ring and the chain is detached from the protection device, it can be hooked on again easily by following the procedure described.

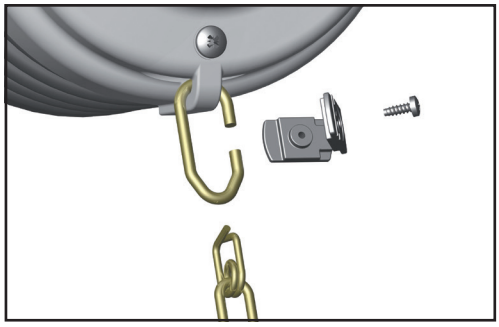

1. Remove the screw and open the clip.

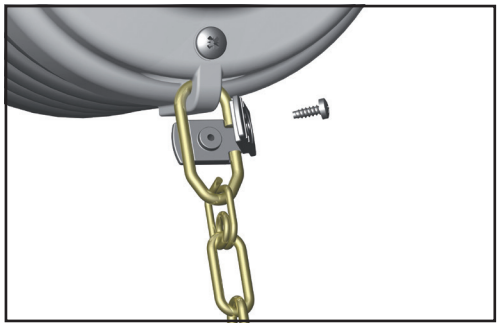

2. Fit the chain and reposition the clip.

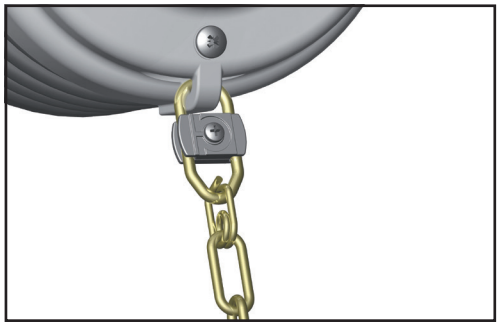

3. Close clip and replace the screw.

PUSH-PIN

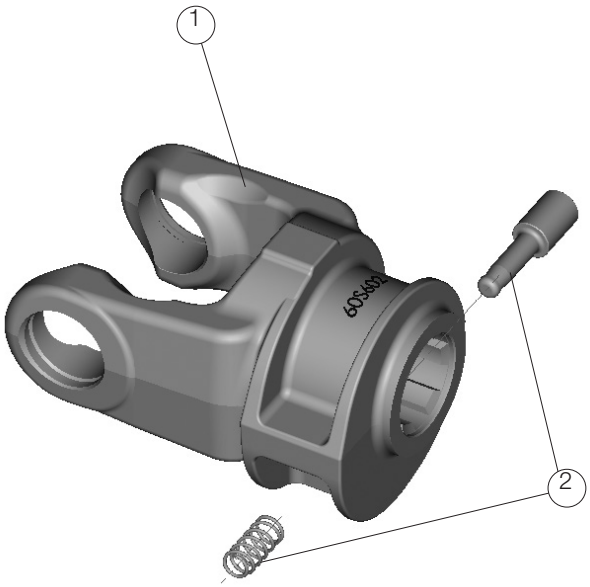

Ref	Description
1	Yoke
2	Push-pin kit

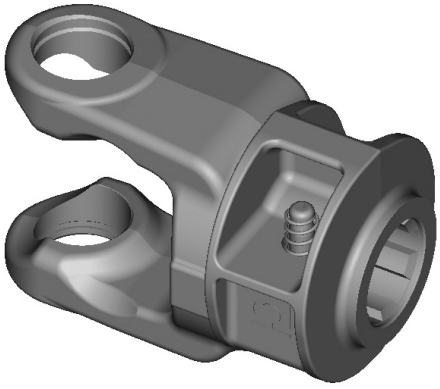

SFT Series	Global Series	100 Series	Profile	Push-pin kit Code
S1	G1	1	1 3/8" Z6	403000021R10
			1 3/8" Z21	403000021R10
			21 UNI 221	403000021R10
S2	G2	2	1 3/8" Z6	403000021R10
			1 3/8" Z21	403000021R10
			21 UNI 221	403000021R10
S4	G3-G4	43-4	1 3/8" Z6	403000001R10
			1 3/8" Z21	403000001R10
			D8x32x38	403000001R10
S5-S6	G5	5	1 3/8" Z6	403000001R10
			1 3/8" Z21	403000001R10
			D8x32x38	403000001R10
S7	G7	6	1 3/8" Z6	403000001R10
			1 3/8" Z21	403000001R10
			D8x32x38	403000001R10
S8-H8	G8	7	1 3/8" Z6	403000032R10
			1 3/8" Z21	403000032R10
			D8x32x38	403000032R10
S9		8	1 3/8" Z6	403000032R10
			1 3/8" Z21	403000032R10
			D8x32x38	403000032R10

DISASSEMBLY



1. Use a screwdriver to remove the spring and theApush pin.

ASSEMBLY



1. Insert the spring and the tapered pin into the push pin 398024000 assembling tool.

   ATTENTION: insert the spring and the pin, as shown in the figure, from the side where the winding diameter and pin are narrower. An improper insertion of the spring may compromise the operation of the push pin.

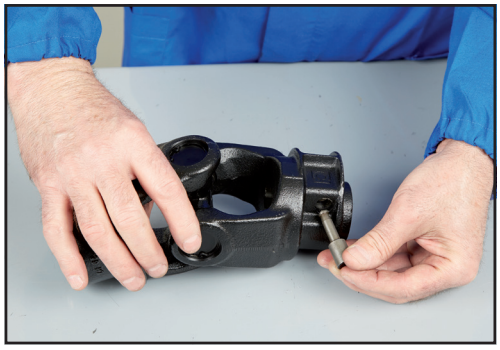

2. Insert the push pin in its housing on the yoke.



3. Place the push pin on a reference surface and the tool on top of the push pin. Press until the spring fits inside its housing.

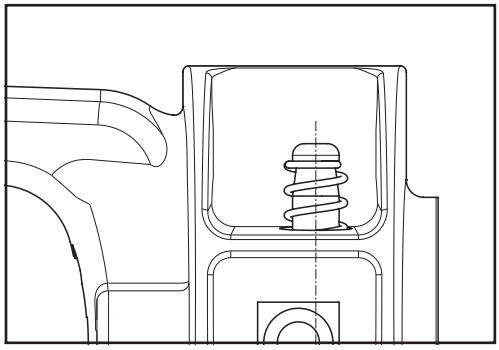

4. Ensure that the spring rests correctly on the push pin's end-of-travel.
5. Ensure push pin's proper operation.

BALL COLLAR **RT**

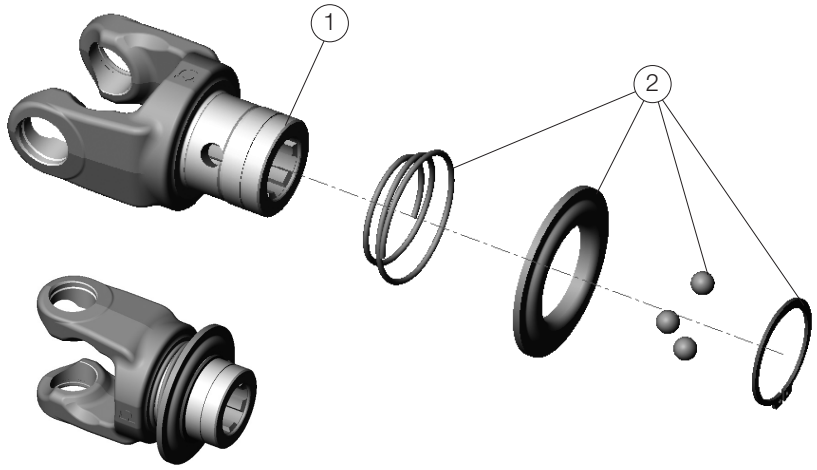

Ref	Description
1	Yoke
2	Ball collar kit RT

TYPES OF BALL COLLAR

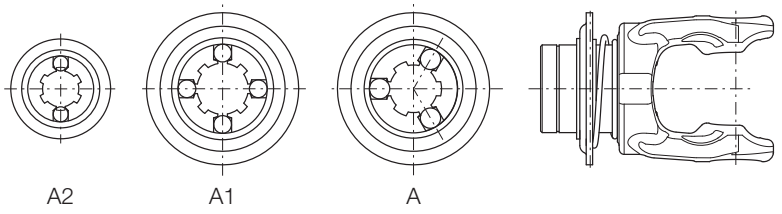

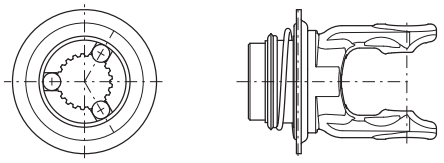

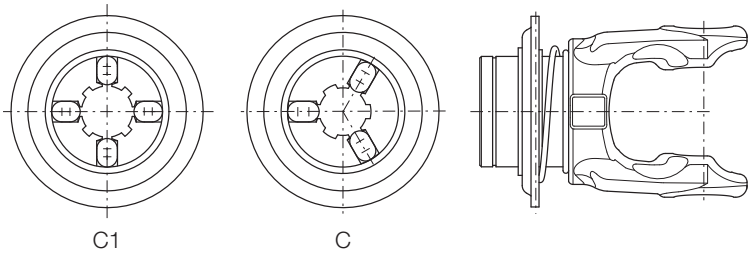

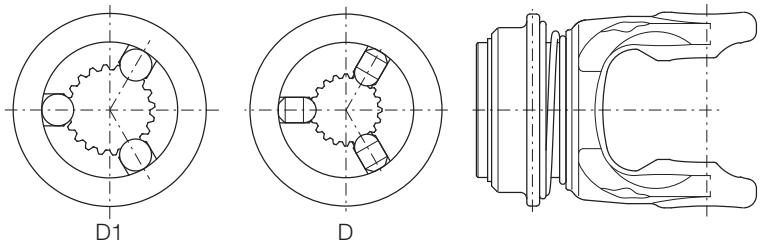

SFT Series	Global Series	100 Series	Profile	Type	Ball collar kit Code
S1	G1	1	1 3/8" Z6	A	435000320R
			1 3/8" Z21	B	435000300R
			21 UNI 221	A2	435000901R
S2	G2	2	1 3/8" Z6	A	435000320R
			1 3/8" Z21	B	435000300R
			21 UNI 221	A2	435000901R
S4	G3-G4	43-4	1 3/8" Z6	A	435000321R
			1 3/8" Z21	A	435000321R
			D8x32x38	A1	435002115R
S5-S6	G5	5	1 3/8" Z6	A	435000321R
			1 3/8" Z21	A	435000321R
			D8x32x38	A1	435002115R
			1 3/4" Z6	A	435000418R
			1 3/4" Z20	A	435000418R
S7	G7	6	1 3/8" Z6	A	435000321R
			1 3/8" Z21	A	435000321R
			D8x32x38	A1	435002115R
			1 3/4" Z6	A	435000418R
			1 3/4" Z20	A	435000418R
S8-H8	G8	7	1 3/8" Z6	C	435000322R
			1 3/8" Z21	C	435000322R
			D8x32x38	C1	435002116R
			1 3/4" Z6	A	435000419R
			1 3/4" Z20	A	435000419R
S9	-	8	1 3/8" Z6	C	435000332R
			1 3/8" Z21	C	435000332R
			D8x32x38	C1	435002118R
			1 3/4" Z6	A	435000425R
			1 3/4" Z20	A	435000425R
SH	-	-	1 3/8" Z6	D	435000328R
			1 3/8 Z21	D	435000328R
			1 3/4" Z6	D	435000423R
			1 3/4" Z20	D	435000423R
S0	-	-	1 3/8" Z6	D	435000328R
			1 3/8 Z21	D	435000328R
			1 3/4" Z6	D	435000423R
			1 3/4" Z20	D	435000423R

Yokes and yoke-shaft connections

DISASSEMBLY



1. Keeping the collar pressed, use the appropriate pliers to remove the retaining ring.
2. Remove the manoeuvre ring and subsequently the balls from their housings.
3. Replace any damaged components with original Bondioli & Pavesi spare parts.

ASSEMBLY



1. Grease the ball housings.



2. Place the balls, spring, and the manoeuvre ring.



3. Keeping the ring pressed, install the retaining ring in its housing.

   ATTENTION: The new yokes can be equipped with two grooves for the retaining ring. Install the retaining ring in the groove near the ball holes. The other groove is for installing the RTA automatic ball collar.

AUTOMATIC BALL COLLAR **RTA**

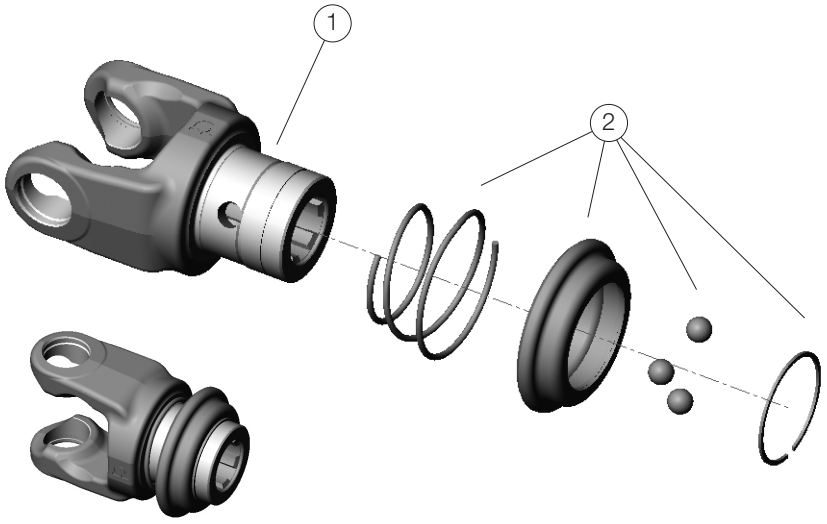

Ref	Description
1	Yoke
2	Automatic ball collar kit RTA

TYPES OF AUTOMATIC BALL COLLARS

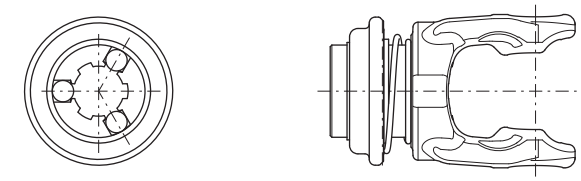

A

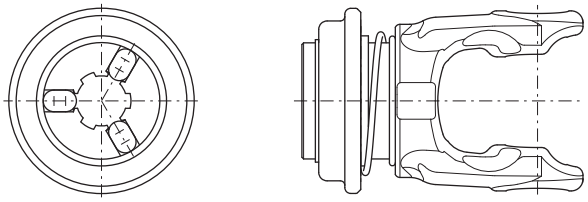

B

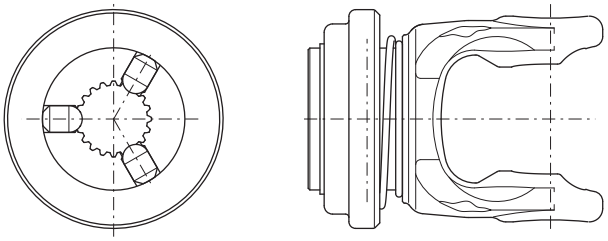

C

SFT Series	Global Series	100 Series	Profile	Type	Automatic ball collar kit Code
S4	G4	43-4	1 3/8" Z6	A	435000311R
			1 3/8" Z21	A	435000311R
S5-S6	G5	5	1 3/8" Z6	A	435000311R
			1 3/8" Z21	A	435000311R
			1 3/4" Z6	A	435000311R
			1 3/4" Z20	A	435000311R
S7	G7	6	1 3/8" Z6	A	435000311R
			1 3/8" Z21	A	435000311R
			1 3/4" Z6	A	435000311R
			1 3/4" Z20	A	435000311R
S8-H8	G8	7	1 3/8" Z6	B	435000312R
			1 3/8" Z21	B	435000312R
			1 3/4" Z6	A	435000411R
			1 3/4" Z20	A	435000411R
S9	-	8	1 3/8" Z6	B	435000312R
			1 3/8" Z21	B	435000312R
			1 3/4" Z6	A	435000411R
			1 3/4" Z20	A	435000411R
SH	-	-	1 3/8" Z6	C	435000329R
			1 3/8 Z21	C	435000329R
			1 3/4" Z6	C	435000424R
			1 3/4" Z20	C	435000424R
S0	-	-	1 3/8" Z6	C	435000329R
			1 3/8 Z21	C	435000329R
			1 3/4" Z6	C	435000424R
			1 3/4" Z20	C	435000424R

Yokes and yoke-shaft connections

DISASSEMBLY

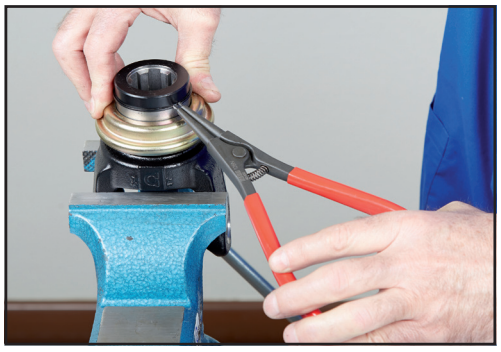

1. Keep the manoeuvre ring pressed and remove the retaining ring using appropriate pliers.
2. Remove the manoeuvre ring and subsequently the balls from their housings.
3. Replace any damaged components with original Bondioli & Pavesi spare parts.
   Do not open or modify the manoeuvre ring device.

ASSEMBLY



1. Grease the ball housings.





2. Place the balls, spring, and the manoeuvre ring.

   To insert the manoeuvre ring, the spring must be pressed, as shown in the box on the right.



3. Keeping the manoeuvre ring pressed, install the retaining ring in its housing.

   ATTENTION: The new yokes can be equipped with two grooves for the retaining ring. Install the retaining ring in the groove near the hub end as shown in the figure.
   The other groove is for installing the RT non-automatic ball collar.

TAPER PIN

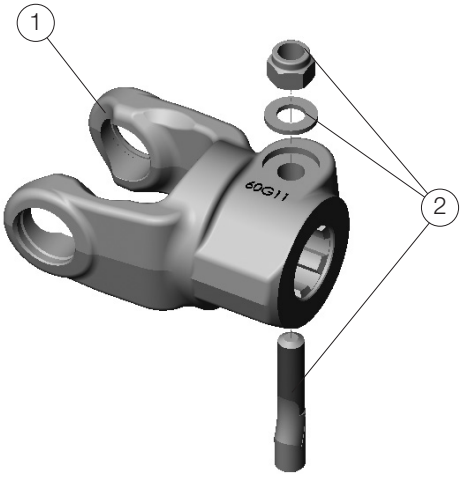

Ref	Description
1	Yoke
2	Taper pin kit



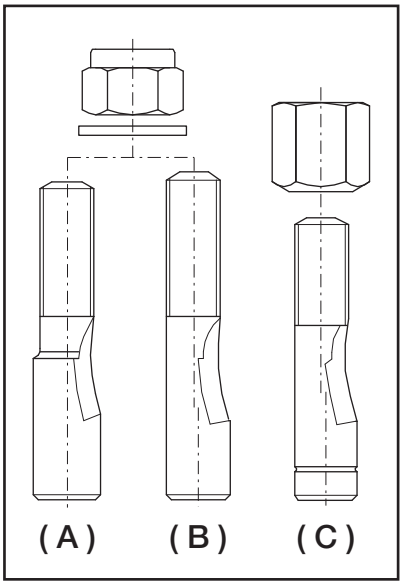

Yokes with tapered bolts provide stable locking and require the use of tools. The shape of the pin is designed to match the profile of the PTO groove, thereby eliminating any clearance between the yoke hub and the shaft onto which it is installed.
Insert the yoke hub onto the PTO and insert the pin in such a way that the tapered profile adheres to the PTO.

Do not install the yokes with tapered bolts for the tractor side onto primary drivelines.

Available spare kits:
- **408000075R** for yokes with 1 3/8” z6 - z21 profile;
- **408000076R** for yokes with 1 3/4” z6 - z20 profile;

The kits include three different tapered pins as shown in the following image, as well as an instruction leaflet, as shown at the bottom of the page.
ATTENTION: Use only pins that fully fit into the hub. Discard any unsuited pins and nuts. Use countersunk nuts ONLY with pins (C) and yokes equipped with countersunk holes.

Do not replace with an ordinary bolt.
Use an original Bondioli & Pavesi tapered bolt.

Ensure that the bolt is properly tightened before use.

Recommended tightening torques:
- 85 Nm (63 ft lbs) for automatic limiters LR with built-in overrunning clutch.
- 150 Nm (110 ft lbs) for profiles 1 3/8”-Z6 and 1 3/8”-Z21.
- 220 Nm (160 ft lbs) for profiles 1 3/4”-Z6 and 1 3/4”-Z20.



The overrunning clutch is available in two versions: RA and RL.
The RA version is equipped with a grease fitting and requires lubrication every 50 hours, using an NLGI 2 consistency grease.
The RL version is equipped with a special sealing ring and a seal plate in the hub to prevent lubricant leaks and contamination.
RL overrunning clutches are lubricated using NLGI 2 molybdenum disulfide grease during assembly; they do not require further lubrication and this is why they are not equipped with grease fitting.

The overrunning clutch is made in three dimensions, which differ for the pawl length and for the fastening system to the PTO.

- RA1 and RL1
  Fastening by means of a push pin (RA1) and ball collar (RL1).
- RA2 and RL2
  Fastening by means of tapered bolt.
- RL3
  Fastening by means of tapered bolt.

RL3 overrunning clutches are equipped with a ball bearing that keeps the hub aligned to the housing during their relative rotation.
For sizes SH and S0, the RL3 overrunning clutches are equipped with four pawls instead of the three used in the other models.

RA1

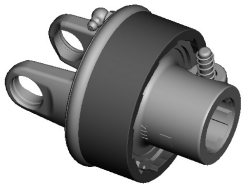

RA2

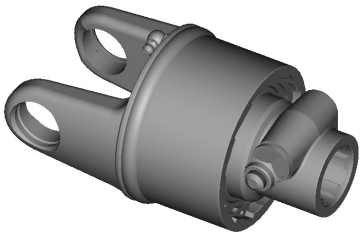

RL1

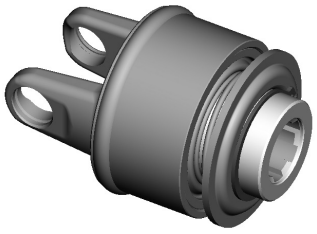

RL2

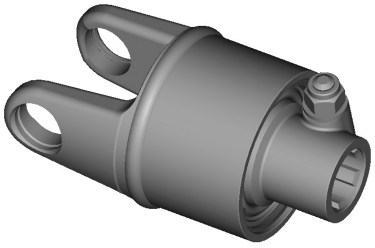

RL3



Overrunning clutches

RA1

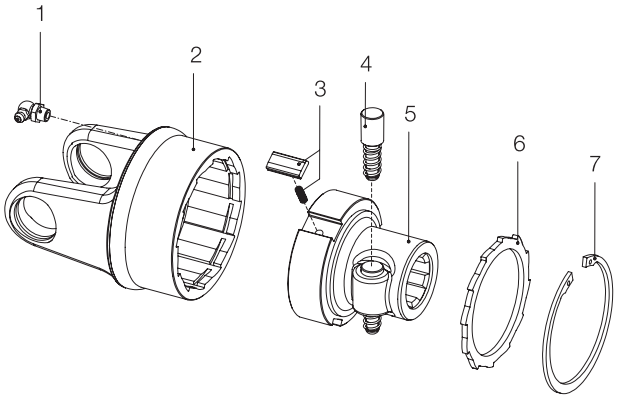

Ref	Description
1	Grease fitting
2	Outer housing + yoke
3	Pawl + spring kit
4	Push-pin kit
5	Hub
6	Locking plate
7	Snap ring

RA2

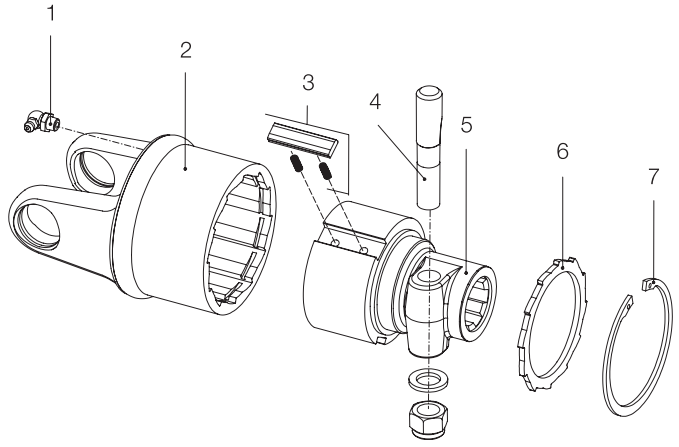

Ref	Description
1	Grease fitting
2	Outer housing + yoke
3	Pawl + spring kit
4	Taper pin kit
5	Hub
6	Locking plate
7	Snap ring

RL1

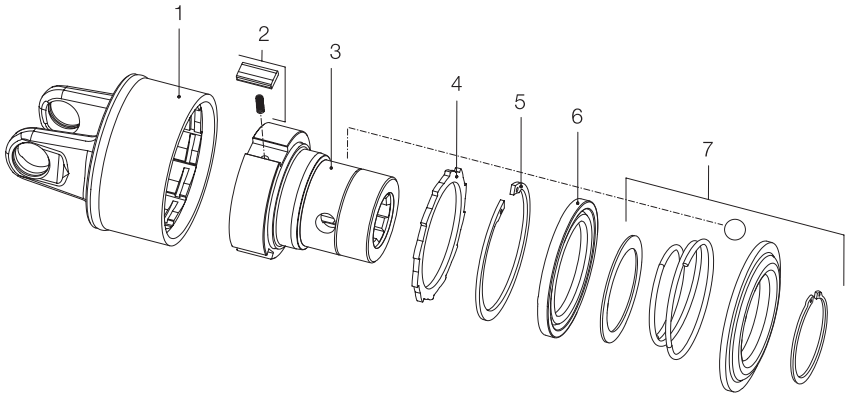

Ref	Description
1	Outer housing + yoke
2	Pawl + spring kit
3	Hub
4	Locking plate
5	Snap ring
6	Sealing ring
7	Ball collar kit

RL2

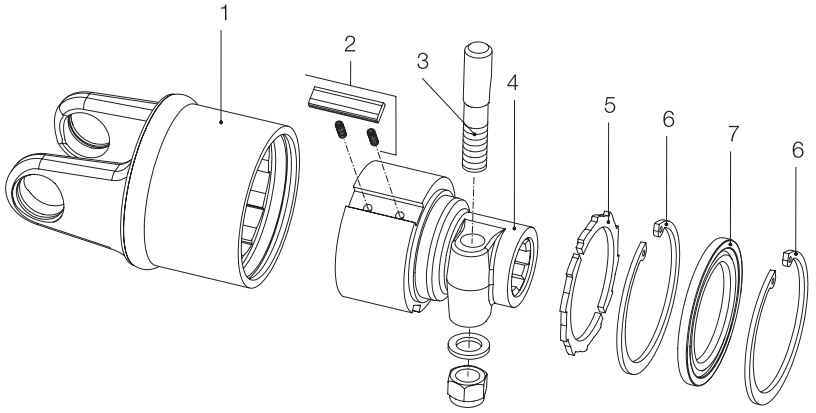

Ref	Description
1	Outer housing + yoke
2	Pawl + spring kit
3	Taper pin kit
4	Hub
5	Locking plate
6	Snap ring
7	Sealing ring

RL3

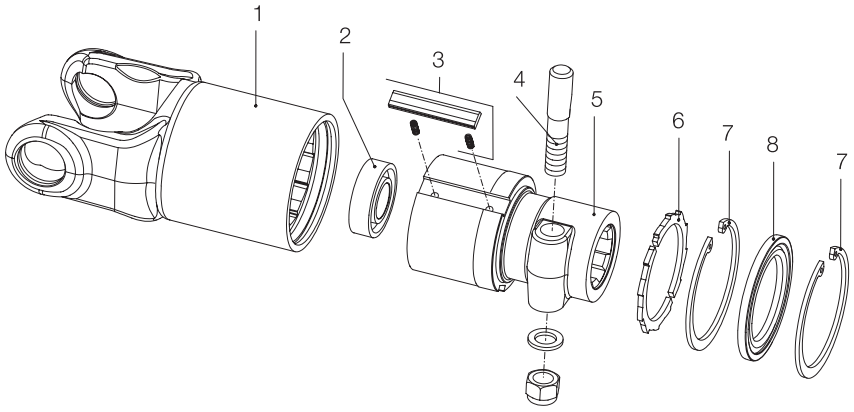

Ref	Description
1	Outer housing + yoke
2	Bearing
3	Pawl + spring kit
4	Taper pin kit
5	Hub
6	Locking plate
7	Snap ring
8	Sealing ring

DISASSEMBLY



The procedure refers to the operations for disassembling a size S9 RL3 overrunning clutch. The other models can be disassembled in the same way, referring to the exploded view drawing.
The components are not painted to allow the images to be clearer.

1. Remove the fastening system (tapered bolt).
2. Only for RA versions with lubrication every 50 hours.
   Remove the grease fitting located on the yoke.



3. Use appropriate pliers to remove the retaining ring.



4. Only for permanent lubrication RL versions.
   Use a screwdriver to remove the sealing ring.
   Take care not to damage or mark the rim of the sealing ring. The sealing ring is not provided with a metal reinforcement; therefore, it can be easily deformed to pass it over the tapered bolt housing.



5. Remove the second retaining ring.
6. Remove the seal plate.

   ATTENTION: In devices with grooved profile, 1 3/4 Z6 e Z20, the shaped seal plate consists of two semi-rings, as shown in the image.



7. Remove the hub keeping the pawls pressed.
   Upon removing the hub, slowly release the pawls.

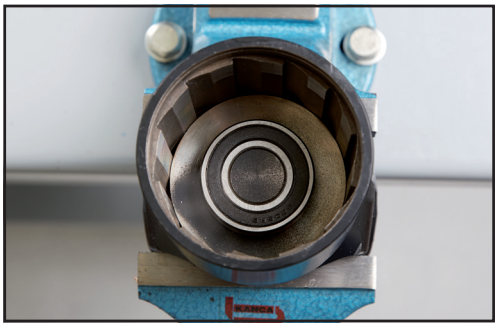

8. Only for RL3 devices.
   Verify the efficiency of the bearing installed at the bottom of the housing without disassembling it. Remove it only in the event it is damaged or not working properly. The 2RS1 bearing does not require lubrication.



9. Verify the efficiency of the components.
   Replace any damaged components with original Bondioli & Pavesi spare parts.

ASSEMBLY

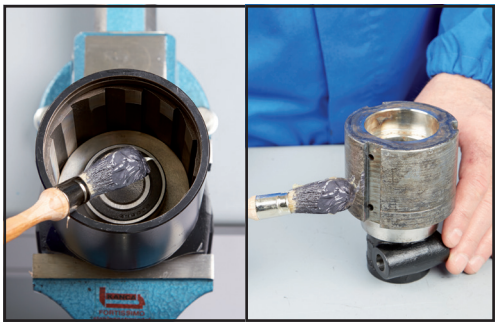

The procedure refers to the operations for assembling an RL2 overrunning clutch. The other models can be assembled in the same way, referring to the exploded view drawing.
The components are not painted to allow the images to be clearer.

1. Grease the overrunning clutch and the pawl housings on the hub.
   ATTENTION:
   - for RA versions, use NLGI 2 grease;
   - for RL versions, use NLGI 2 molybdenum disulfide grease.



2. Insert the springs and pawls into the hub, taking care that the pawls are properly positioned.

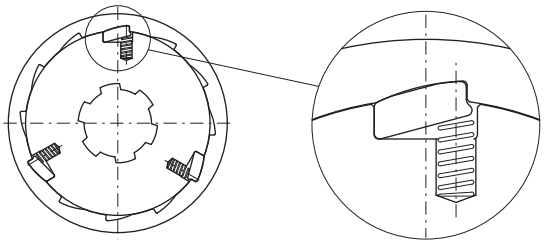



3. Keeping the pawls compressed, insert the hub into the housing. ATTENTION: in RL3 models, the hub must be fitted onto the bearing located at the bottom of the housing without any interference. Do not use a mallet to fit the hub into the housing.



4. Insert the seal plate (all the two semi-plates).
Use a screwdriver to ensure that the plate fits correctly into the housing profile.



5. Install the retaining ring into its housing.



6. Only for permanent lubrication RL models.
Install the sealing ring and the second retaining ring (see sectional view).

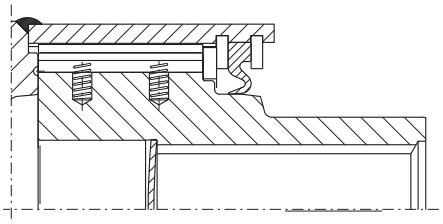



7. Ensure overrunning clutch's proper operation.
8. Install the fastening system (tapered bolt).
9. Only for RA versions with lubrication every 50 hours.
Installed the grease fitting and pump grease according to the indications contained in the "Lubrication" chapter.

Ratchet limiters are available in four different versions; every version is available in four different models.
The following table shows the main features of the various versions.
Version SA (one-way) and version LN (symmetrical) have a 50 hour lubrication interval (NLGI 2 grease).
SA1, SA2, LN1 and LN2 have a push-pin type connection to the splined shaft. SA3, SA4, LN3 and LN4 have a ball collar type connection.

LT (symmetrical) and LC (one-way) ratchet torque limiters are fitted with a special sealing ring and a locking plate located in the housing to help prevent loss and contamination of the grease.
LT and LC ratchet clutches require lubrication only once in a season (with NLGI 2 grease). They have a ball collar connection to the splined shaft.

Type	Version	Lubrication	Model	Number of ratchets	Fixing system	
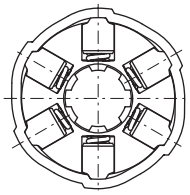 unidirectional	SA	50 hours	SA1	6	push pin	
			SA2	12		
			SA3	18	ball collar	
			SA4	24		
	LC	seasonal	LC1	6	ball collar	
			LC2	12		
			LC3	18		
			LC4	24		
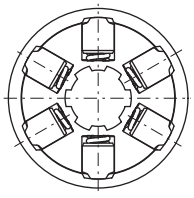 symmetrical	LN	50 hours	LN1	6	push pin	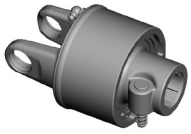
			LN2	12		
			LN3	18	ball collar	
			LN4	24		
	LT	seasonal	LT1	6	ball collar	
			LT2	12		
			LT3	18		
			LT4	24		

Ratchet torque limiters

SA2 Ratchet torque limiters

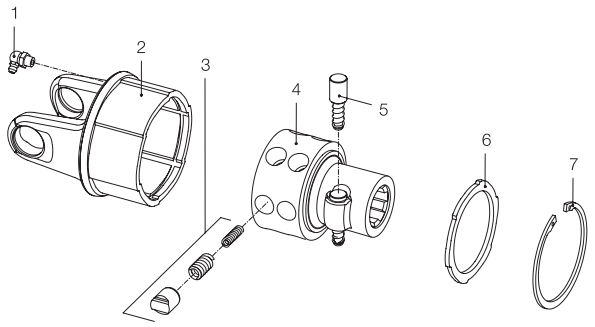

Ref	Description
1	Grease fitting
2	Outer housing + yoke
3	Ratchet + spring kit
4	Hub
5	Push-pin kit
6	Locking plate
7	Snap ring

SA4 Ratchet torque limiters

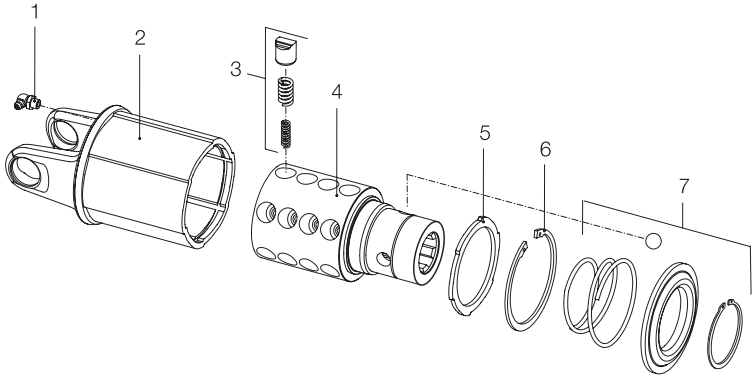

Ref	Description
1	Grease fitting
2	Outer housing + yoke
3	Ratchet + spring kit
4	Hub
5	Locking plate
6	Snap ring
7	Ball collar kit

LT4 Ratchet torque limiters

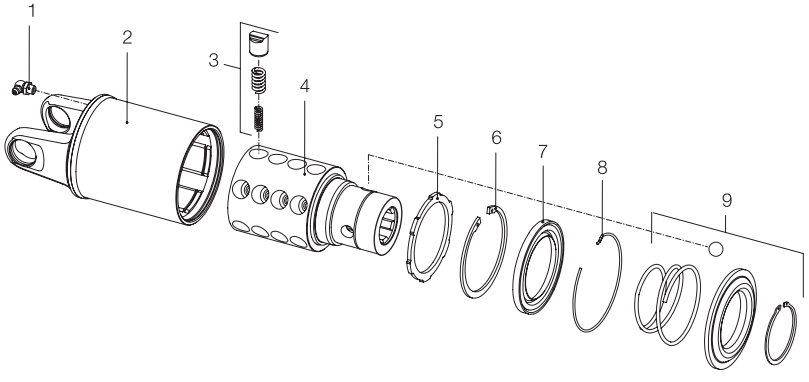

Ref	Description
1	Grease fitting
2	Outer housing + yoke
3	Ratchet + spring kit
4	Hub
5	Locking plate
6	Snap ring
7	Sealing ring
8	Snap ring
9	Ball collar kit

DISASSEMBLY



The procedure refers to the operations for disassembling an LT3 ratchet limiter. The other models can be disassembled in the same way.

1. Remove the grease fitting.
2. Remove the ball collar. Hold the seal plate with a hand while removing the retaining ring, using the appropriate pliers. Remove the ring, spring, and the three balls.
   ATTENTION: In models equipped with a push pin, do not remove it, since you'll need it to extract the hub.



3. Only for LC and LT models.
   Use two screwdrivers to remove the retaining ring, as shown in the figure. Use one screwdriver to hold the ring and the other to remove the bevelled end from its housing.



4. Only for LC and LT models.
   Use a screwdriver to remove the sealing ring. Take care not to damage or mark the rim of the seal ring.



5. Use appropriate pliers to remove the retaining ring.
6. Remove the seal plate.



7. Insert the grooved roll pin of the extractor 397007001 into the hub, aligning the hole of the roll pin with the hole of the hub.
8. Place the containment mask 397006001 of the ratchet limiter extractor, in such a way that the mask eyelet is placed in front of the grooved roll pin hole.

DISASSEMBLY



9. Insert the pin into the hub hole, which coincides with the hole made on the extractor grooved roll pin.



10. Tighten extractor 397007001 until all the ratchets come out from the limiter housing.
11. Free the hub from the extractor.



12. Verify the efficiency of the various components and, in particular:
    - the tracks on the housing;
    - the surfaces on the ratchet head;
    - the surfaces on the ratchet head;
    - the efficiency of the fastening system.

    Replace any damaged components with original Bondioli & Pavesi spare parts.

ASSEMBLY



The procedure refers to the operations for assembling an LT3 ratchet limiter. The other models can be assembled in the same way. The components are not painted to allow the images to be clearer.

1. Lubricate the limiter housing, using grade 2 NLGI grease.

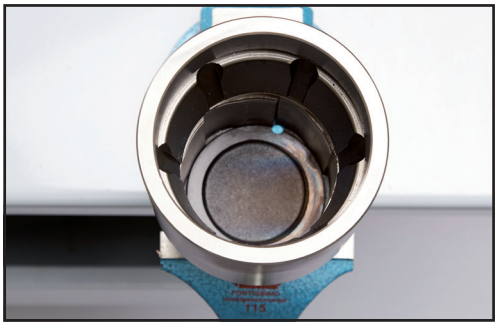

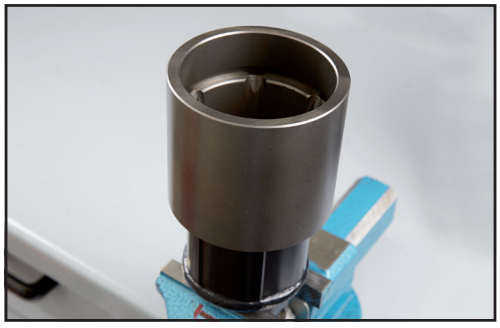

2. Place the installation template 398012000, aligning its hollow sections with the hollow sections of the housing.



3. Insert the ratchets and the number of springs relative to the required calibration into the hub, directing the ratchets as shown in the figure. The nominal number of springs according to the calibration is shown in the table on page 7.
   Place the springs in such a way as to obtain a symmetrical configuration that distributes the load evenly to all the rows of the limiter.



4. Insert the limiter into the installation template.
5. Use a mallet and, if necessary, a spacer to push the hub.



6. Align the steel plate profile with the limiter housing and install it.



7. Install the retaining ring into its housing.



8. Only for seasonal lubrication LC and LT versions.
   Install the sealing ring as shown in the figure.
   Pay special attention to the installation position of the ring. The rim must face towards the outside to prevent dirt from entering into the limiter.
9. Only for seasonal lubrication LC and LT versions.
   Install the retaining ring into its housing.



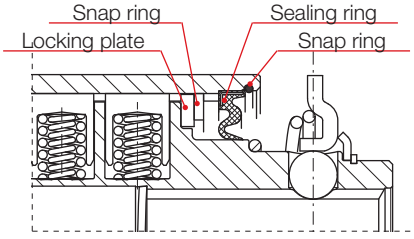

LC and LT versions
seasonal lubrication



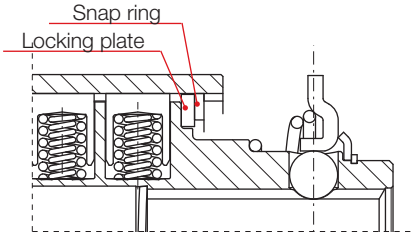

SA and LN versions
lubrication every 50 hours

10. Grease the balls and insert them in their housings.
11. Place the spring.



12. Insert the ball collar manoeuvre ring and, while keeping it pressed, place the retaining ring into its housing.
    Ensure that ball collar is working appropriately.
13. Tighten the grease fitting into the hole in proximity of the yoke.
14. Use NLGI 2 grease to lubricate the limiter according to the amounts indicated in the “Lubrication” chapter.

TORQUE SETTING TABLES

The following table shows the type and nominal number of springs according to the limiter model and to the required calibration.

Type	Model	Nominal calibration	Number of ratchets	Number of springs		Spare parts codes Ratchet + spring kit
				Outer	Inner	
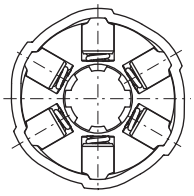 unidirectional	SA1 - LC1	300 340 360 400	6	6	0 2 3 6	421340001R06
	SA2 - LC2	600 650 760 800	12	12	0 3 9 12	
	SA3 - LC3	900 1000 1100 1200	18	18	0 6 11 17	
	SA4 - LC4	1200 1250 1350 1400 1500 1600	24	24	0 2 8 11 17 24	
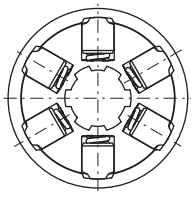 symmetrical	LN1- LT1	220 250 260 300	6	6	0 2 3 6	421340007R06
	LN2 - LT2	460 500 560 600	12	12	0 3 8 12	
	LN3 - LT3	700 760 800 860 900	18	18	1 6 10 15 18	
	LN4 - LT4	940 1000 1100 1150 1200	24	24	2 9 15 20 24	

LB shear bolt limiters are integrated devices that cannot be separated after assembly. Components supplied as spare parts include the complete torque limiter, shear bolts (packaged in quantities of five pieces, including the nuts), push-pins or taper pins, and grease fittings.
Size S1 and S2 shear bolt LB torque limiters are lubricated during assembly, and no additional lubrication is required (no grease fitting).
For other sizes it is recommended to lubricate every 100 hours of use.
The grease is necessary to lubricate the surfaces of the hub and yoke that rotate independently after the bolt has sheared.

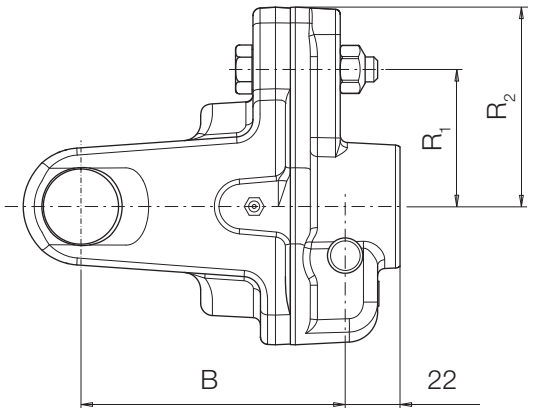

SFT Series	Setting Nm	Global Series	100 Series	Setting Nm	B mm	R_1 mm	R_2 mm	BOLT	COUPLING
S1	650	G1	1	650	80	37	68	M6x40 Cl. 8.8	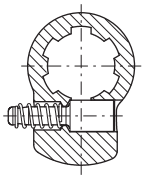 Push pin
	700			700		40		M6x40 Cl. 8.8	
	780			-		45		M6x40 Cl. 8.8	
S2	950 ^	G2	2	950	87	55	68	M6x40 Cl. 8.8	
	1050			1050		60		M6x40 Cl. 8.8	
	1250			-		40		M8x45 Cl. 8.8	
S4	1400	G3-G4	43-4	1400	93	45	68	M8x45 Cl. 8.8	
	1700 ^			1700		55		M8x45 Cl. 8.8	
	2000		4	2000		43		M10x50 Cl. 8.8	
S5	2100	G5	5	2100	106	67	80	M8x45 Cl 8.8	
S5-S6	2400 ^			2400		50		M10x50 Cl. 8.8	
S6	2500			-		52		M10x50 Cl. 8.8	
	2700			-		55		M10x50 Cl. 8.8	
S7	-	G7	6	2400	112	45	80	M10x50 Cl. 8.8	
	2700			2700		55		M10x50 Cl. 8.8	
	3100			-		65		M10x50 Cl. 8.8	
S8-H8	2700	G8	7	2700	115	55	80	M10x50 Cl. 8.8	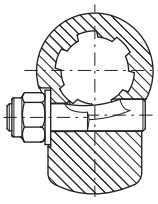 Taper pin
	3200			3200		66		M10x50 Cl. 8.8	
	3600			-		52		M12x55 Cl. 8.8	
H8	4200			-		60		M12x55 Cl. 8.8	
S9	3000	-	8	3000	121	62	80	M10x50 Cl. 8.8	
	3500			3500		50		M12x55 Cl. 8.8	
	4200			-		60		M12x55 Cl. 8.8	
SH	4000	-	-	-	120	57	80	M12x70 Cl. 8.8	
	4500			-		65		M12x70 Cl. 8.8	
	5200			-		55		M14x70 Cl. 8.8	
S0	-	-	-	-	-	-	-		

The torque setting, assigned according to type and size of telescoping members, must never exceed the maximum torque of the driveline.
As for S2, S4 and S6 shafts, which can be equipped with 4-tooth or Free Rotation pipes, the calibration values marked with (^) indicate the maximum values recommended for Free Rotation pipes.

Shear bolt torque limiter

Bolts used on standard LB shear bolt limiters are metric class 8.8, steel, with a minimum strength (R_m) equal to 800 N/mm^2. ISO standards and SAE standards (for USA) for shear bolts with corresponding strengths (R_m) are tabulated to the right.
The setting is increased by approximately 20% when replacing the standard class 8.8 bolt with one of the same diameter but class 10.9.
Standard bolts are partially threaded, and the nominal settings usually are referenced to shearing on the un-threaded shank of the bolt.
The nominal setting is reduced approximately 20% when replacing the standard bolt with another of the same class, but will shear on the threaded portion of the bolt.

For the safety of the operator and reliable function of the driveline, replace the bolt only with one equal in length, diameter, and grade as the original.

ISO standard	Class	R_m minimum
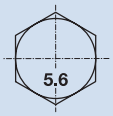	5.6	500 N/mm^2
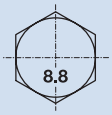	8.8	800 N/mm^2
	10.9	1000 N/mm^2
SAE standard	**Grado**	**R_m minimum**
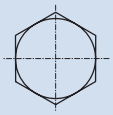	2	74000 psi 510 N/mm^2
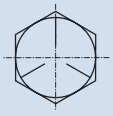	5	120000 psi 827 N/mm^2
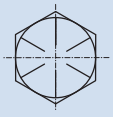	6	150000 psi 1034 N/mm^2

LB with push pin

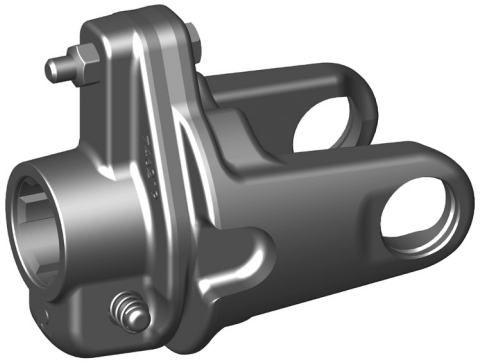

LB with taper-pin

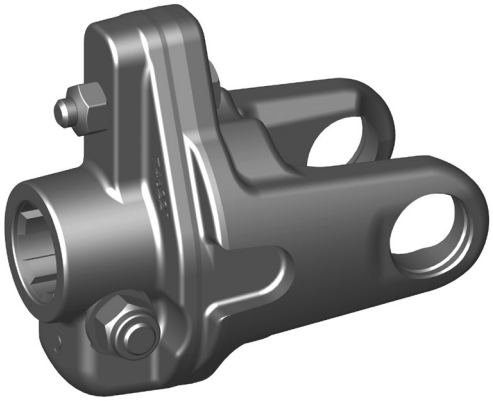

Recommended tightening torques	Nm	in·lb
M6	10.4	92
M8	25.0	221
M10	50.0	443
M12	86.0	761
M14	137.0	1213

Automatic limiters are available in three different models, which mainly differ for the number of cams and the overall diameter Ø of the housing.
The following table shows the calibration kit code of the limiter model and required calibration.

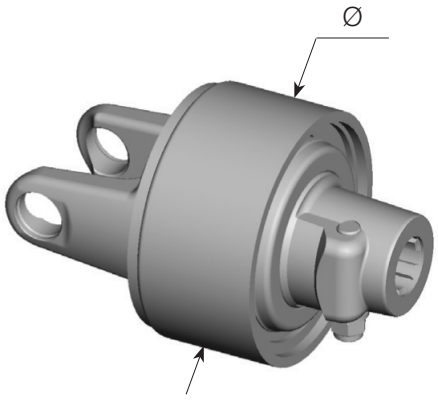

Model	Ø [mm]	Number of cams	Setting [Nm]	Spring pack Code
LR23	151	3	1200	421154801R
			1500	421155401R
			1700	421155701R
			1900	421155901R
			2100	421156101R
LR24	151	4	2500	421166502R
			2600	421166601R
			2900	421166902R
			3000	421167001R
LR35	176	5	3500	421188101R
			4100	421188801R
			4500	421188001R

Ref	Description
1	Outer housing + yoke
2	Bushing
3	Spring pack
4	Bushing
5	Cam
6	Taper pin
7	Hub with taper pin and bushings
8	Bushing
9	Sealing ring
10	O-ring
11	Locking plate
12	Snap ring

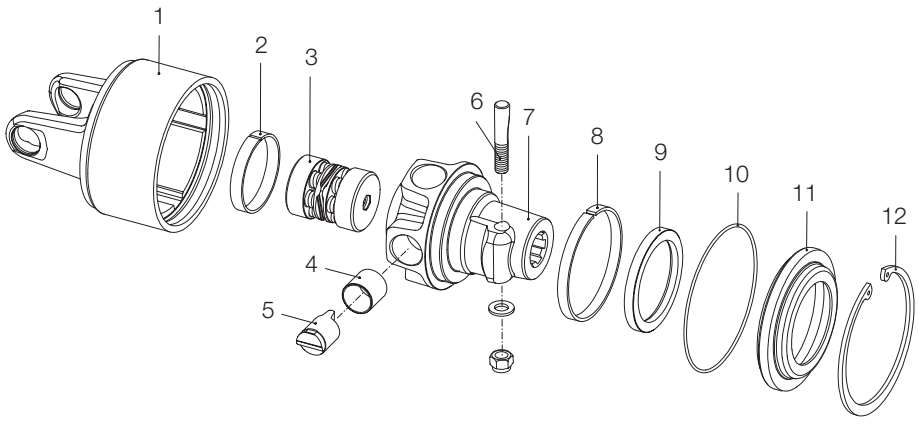

DISASSEMBLY



The procedure refers to the operations for disassembling an LR24 automatic limiter. The other models can be disassembled in the same way.
The components are not painted to allow the images to be clearer.

1. Remove the tapered pin.

DISASSEMBLY



2. Use the appropriate pliers to remove the retaining ring from the housing.



3. Extract the hub with its cover from the housing, taking care not to damage the O-ring.



4. Remove the cams as shown in the figure to free the inner calibration kit. The cams do not need to be fully removed.

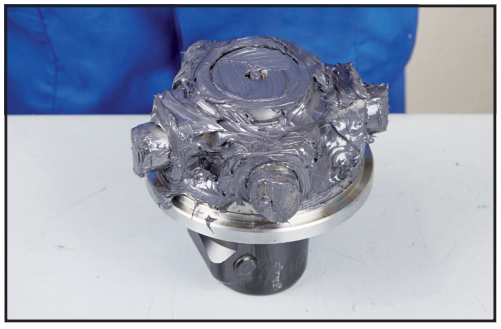

The following picture shows the hub with all the cams partly removed to allow extracting the calibration kit.



5. Remove the calibration kit.
   A screwdriver can be used as a lever to access the kit through one of the radial holes made on the hub.

   Verify the efficiency of the various components and, in particular:
   - the tracks on the housing;
   - the surfaces on the cam head;
   - the efficiency of the fastening system.

   Replace any damaged components with original Bondioli & Pavesi spare parts.

ASSEMBLY

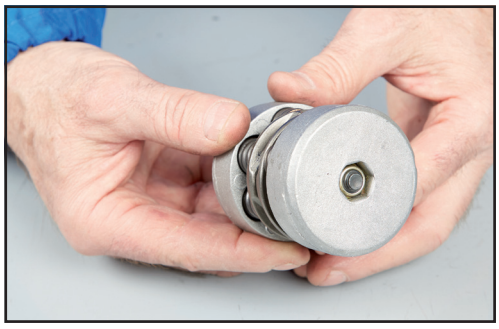

The procedure refers to the operations for assembling an LR24 automatic limiter. The other models can be assembled in the same way.
The components are not painted to allow the images to be clearer.

1. The calibration value of the kit, expressed in Nm, is printed on the aluminium spring holder. The available spare calibration kit codes are shown in the table.

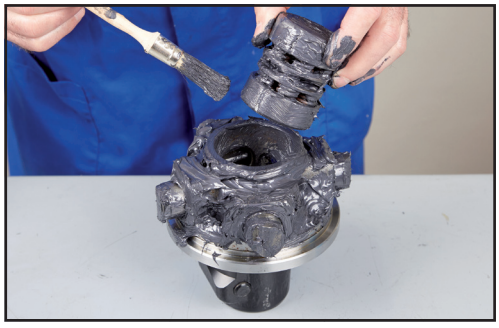

2. Grease the new calibration kit.
   It is highly recommended to use molybdenum disulfide grease.

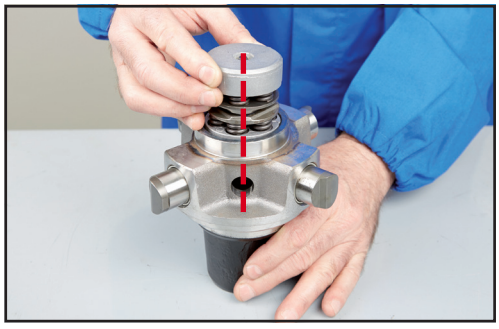

3. Insert the calibration kit with the nut facing upwards. Align the hollow sections of the pawls with the cams. If the hub is not symmetrical (LR24 and LR35), the operation can be simplified by aligning the longest side of the pawls with the largest compartment between the cams.
   In the image, the kit is not greased for it to be clearer.

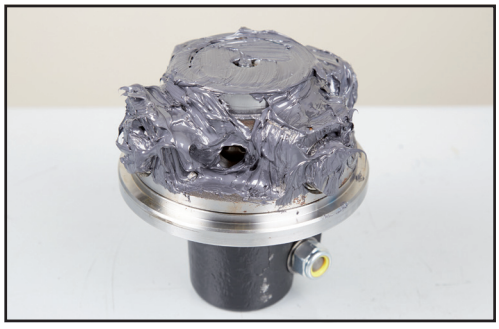

4. Reinsert the cams previously removed.
   VEnsure that the cams are fully inserted as illustrated. Should the cams not fit completely, it means that the calibration kit has not been inserted correctly; therefore, it must be removed and the alignment must be repeated.



5. Fill the free compartments between one cam and the other with grease.
   It is highly recommended to use molybdenum disulfide grease.



6. Verify that the O-ring is in its housing and is not damaged.



7. Reinsert the hub with its cover, aligning the cams with the hollow sections of the housing.
   If the cams are not fully inserted inside the holes, the hub will not fit: Repeat the calibration kit alignment (operation 3).



8. Insert and adjust the retaining ring.



9. Reinstall the tapered pin.

FV friction clutches are equipped with special Belleville springs, designed to apply pressure that varies with the amount of compression.
Five models of FV friction clutches are available, with different diameters and number of friction linings.
All versions have metal surfaces that are specially treated to help prevent sticking and corrosion of the friction linings.
The chart below shows the outer diameter D and number of linings of each model.

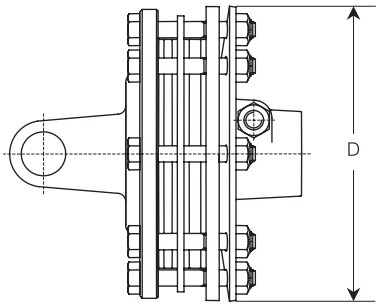

Model	D mm	number of linings	attachment	
FV22	155	2	push pin	
FV32	180	2	taper pin	
FV42	202			
FV34	180	4	taper pin	
FV44	202			

Friction clutches may become hot during use.
Do not touch!
Keep the area around the friction clutch clear of any material which could catch fire and avoid prolonged slipping that will generate excess heat and wear.

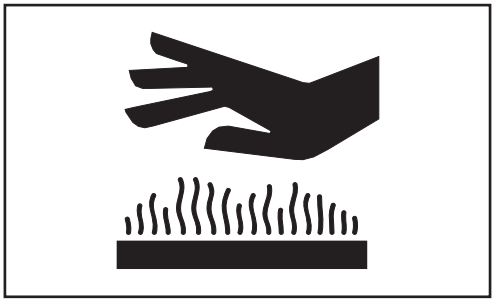

Friction torque limiters FV

FV22

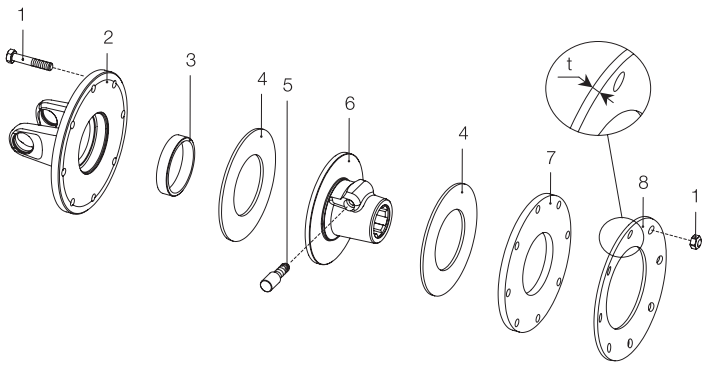

Ref	Description
1	Bolt
2	Flange yoke
3	Bushing
4	Friction lining
5	Push pin kit
6	Hub
7	Pressure plate
8	Belleville spring

FV32 - FV42

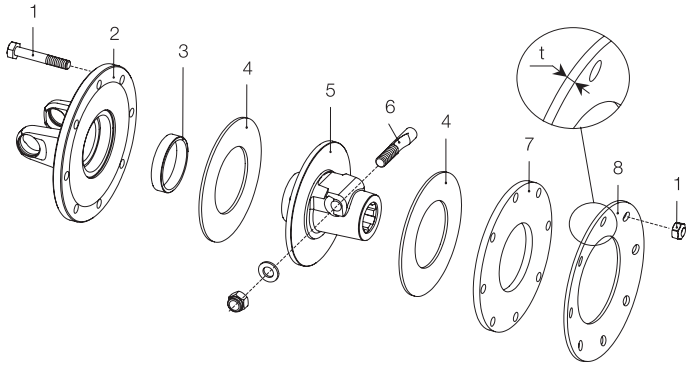

Ref	Description
1	Bolt
2	Flange yoke
3	Bushing
4	Friction lining
5	Hub
6	Taper pin kit
7	Pressure plate
8	Belleville spring

FV34 - FV44

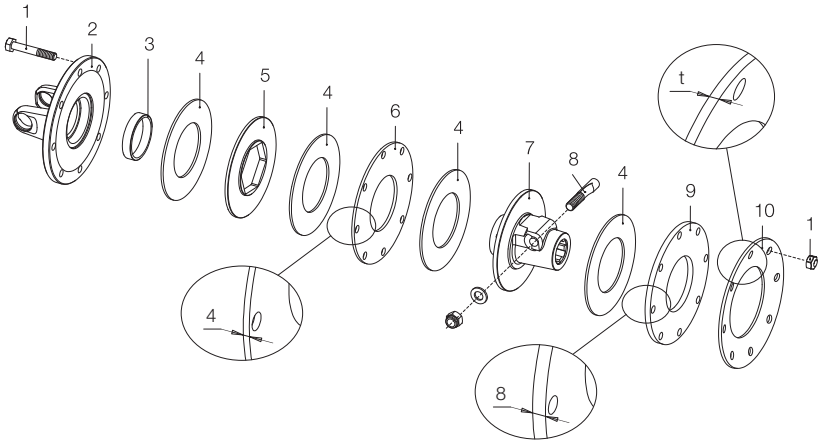

Ref	Description
1	Bolt
2	Flange yoke
3	Bushing
4	Friction lining
5	Driving plate
6	Inner plate (sp = 4 mm)
7	Hub
8	Taper pin kit
9	Pressure plate
10	Belleville spring

DISASSEMBLY

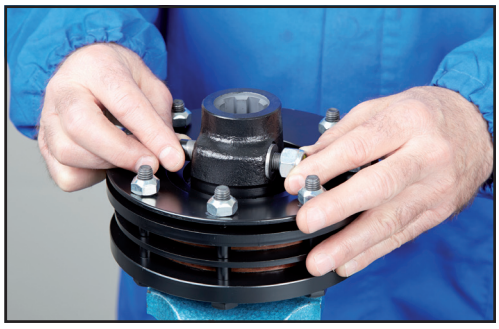

The shown procedure refers to the disassembling operations of a friction torque limiter FV34. The other models can be disassembled in the same way.
Parts are not painted for better clearness of the pictures.

1. Remove the taper pin.

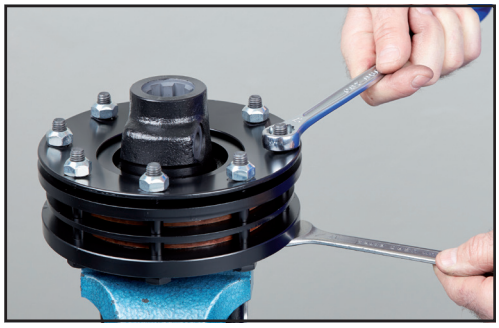

2. Unscrew progressively the 8 bolts in order to reduce the pressure uniformly on discs and linings.



3. Remove spring, discs and linings from the torque limiter.
4. Verify the efficiency of all the parts of the torque limiter. **Replace worn or damaged components with original Bondioli & Pavesi spare parts.**

   Note: lining nominal thickness is 3.2 mm. It's reccomended to replace linings when thickness is reduced to 2.5 mm.

   Clean all metallic surfaces especially those in contact with linings.

ASSEMBLY

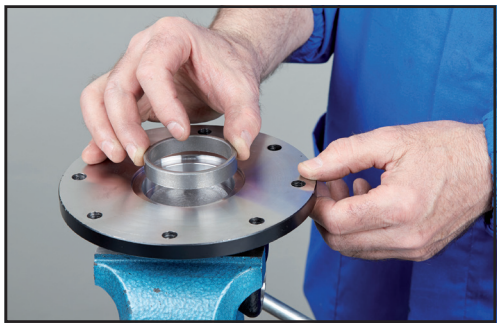

The shown procedure refers to the assembling operations of a friction torque limiter FV34. The other models can be assembled in the same way. Parts are not painted for clearness of the pictures

1. Apply a film of grease on bushing surfaces and insert it into the flange yoke. Avoid excessive grease on the bushing.

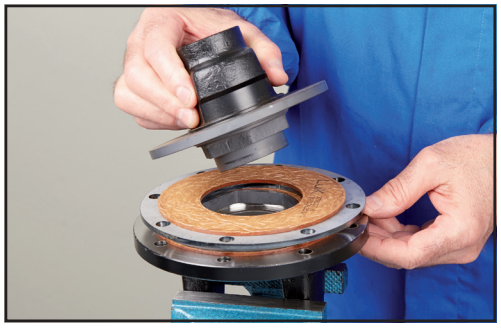

2. Assemble in sequence the other parts as shown in the exploded views.

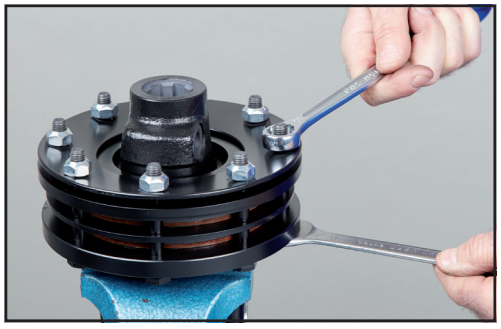

3. Insert the 8 screws with their heads on flange yoke side.
4. Turn all the nuts in contact with the spring

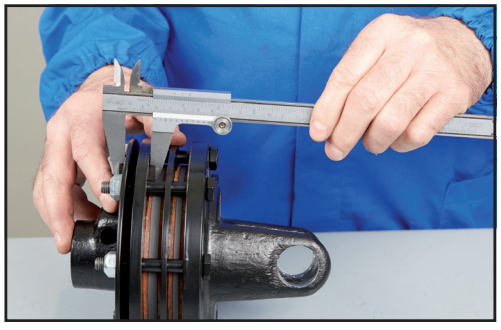

5. Tight progressively the bolts (for example half turn every bolt) in order to uniformly compress the Belleville spring to its required compression “h”.
   The tables in the following page set out the values of compression “h” measured as shown in the figure for standard settings.

   The height h of the spring must be measured next to each bolt and may be ±0.2 mm of the nominal required value.

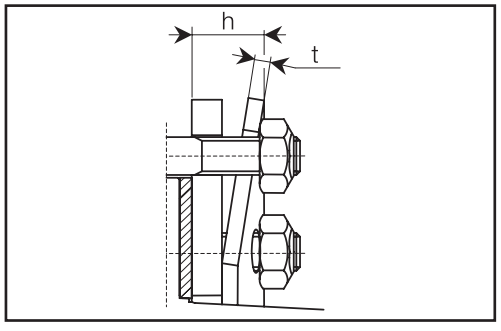

Do not over-tighten the bolts; this may endanger the function of the clutch.

Bondioli & Pavesi reccomends to not modify the torque setting estabilished by implement constructor - damages to implement, driveline or tractor may occur.

TORQUE SETTING TABLES

The tables below set out, for each FV friction model, spring codes, thicknesses and compression “h” measured as shown in the figure for standard settings.
The height of the spring is measured next to each bolt and may be ± 0.2 mm of the listed value.

The tables also show the amount of rotation of each bolt required to achieve the next higher or lower setting, relative to the nominal setting (listed with no rotation noted on the bolt).
In addition to the listed settings, intermediate settings may be obtained by tightening or loosening the bolts proportionately. According to the limiter model, the following tables show the standard spring code, its thickness, and its calibration values with the relative compression height h.

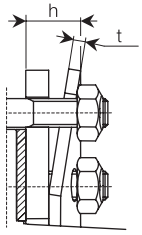

FV22 Friction clutches
2 linings, diameter 155 mm, push pin

Spring code	t mm	Setting Nm	h mm	
367005850	3.75	400	13.5	
		600	13.0	
		800	12.5	

FV32 Friction clutches
2 linings, diameter 180 mm, taper pin

Spring code	t mm	Setting Nm	h mm	
367008860	3.75	900	17.5	
		1000	17.0	
		1100	16.5	

FV34 Friction clutches
4 linings, diameter 180 mm, taper pin

Spring code	t mm	Setting Nm	h mm	
367008860	3.75	1200	18.0	
		1600	17.5	
		2000	16.5	

FV42 Friction clutches
2 linings, diameter 202 mm, taper pin

Spring code	t mm	Setting Nm	h mm	
367009870	4.25	1200	18.5	
		1450	18.0	
		1800	17.0	

FV44 Friction clutches
4 linings, diameter 202 mm, taper pin

Spring code	t mm	Setting Nm	h mm	
367009870	4.25	1800	19.0	
		2400	18.5	
		3000	17.5	

FFV friction clutches are equipped with helical (coil) springs, that apply pressure in proportion to their compression.
Five models of FFV friction clutches are available, with different diameters and number of friction linings
All versions are available with treated hubs and driving plates to reduce corrosion and help prevent seizure.
The chart below indicates the diameter D and number of linings.

Drivelines with FFV clutches are not EU marked because the shield does not cover the entire inner yoke as required by Machinery Directive 2006/42/CE.

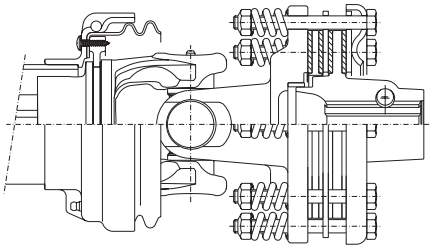

Model	D mm	number of linings	attachment	
FFV22	159	2	push pin	
FFV32	180	2	taper pin	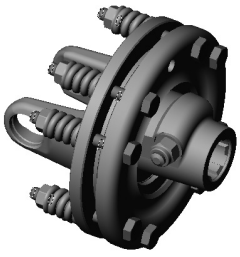
FFV42	202			
FFV34	180	4	taper pin	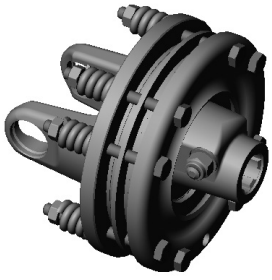
FFV44	202			

Friction clutches may become hot during use.
Do not touch!
Keep the area around the friction clutch clear of any material which could catch fire and avoid prolonged slipping that will generate excess heat and wear.

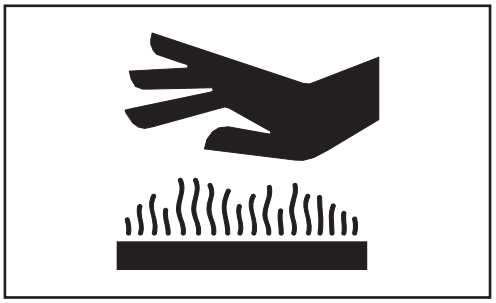

Friction torque limiters FFV

FFV22

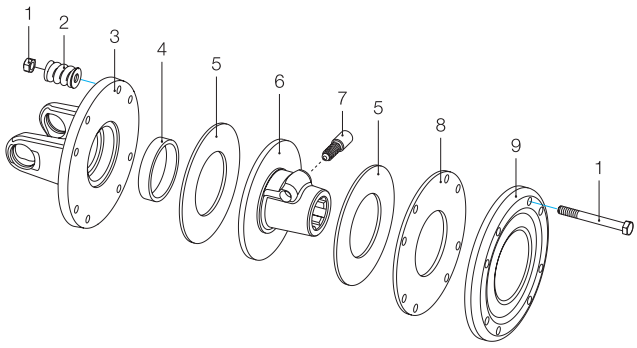

Ref	Description
1	Bolt
2	Coil springs
3	Flange yoke
4	Bushing
5	Friction lining
6	Hub
7	Push pin kit
8	Inner plate
9	Pressure plate

FFV32 - FFV42

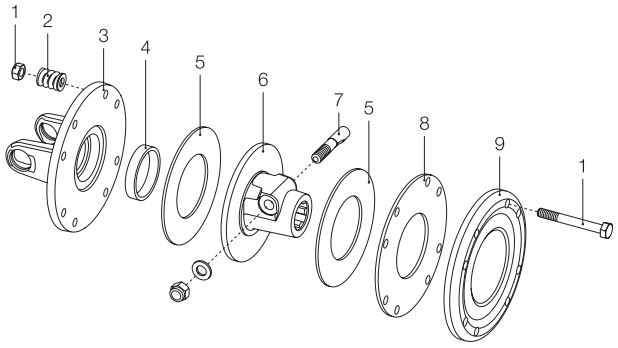

Ref	Description
1	Bolt
2	Coil springs
3	Flange yoke
4	Bushing
5	Friction lining
6	Hub
7	Taper bolt kit
8	Inner plate
9	Pressure plate

FFV34 - FFV44

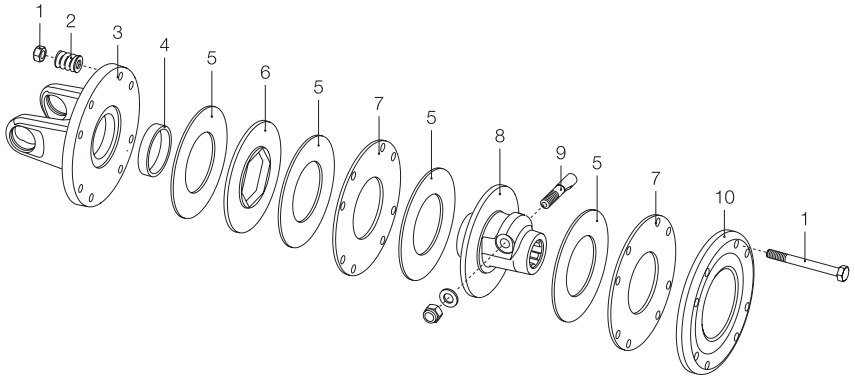

Ref	Description
1	Bolt
2	Coil springs
3	Flange yoke
4	Bushing
5	Friction lining
6	Driving plate
7	Inner plate
8	Hub
9	Taper bolt kit
10	Pressure plate

DISASSEMBLY

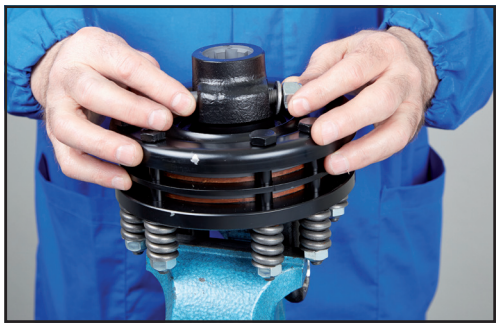

The procedure refers to the operations for disassembling an FFV34 friction limiter. The other models can be disassembled in the same way.
The components are not painted to allow the images to be clearer.

1. Remove the tapered bolt.

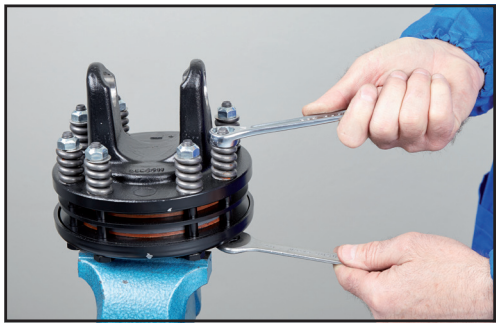

2. Remove all the bolts progressively in order to reduce the spring thrust evenly and gradually.



3. Remove all the components of the limiter.
4. Verify the efficiency of all the components.
   Replace any damaged components with original Bondioli & Pavesi spare parts.

   Note: The friction discs have a nominal thickness of 3.2 mm. We recommend replacing them when the thickness is below 2.5 mm. Clean the metal surface in contact with the friction discs.

ASSEMBLY

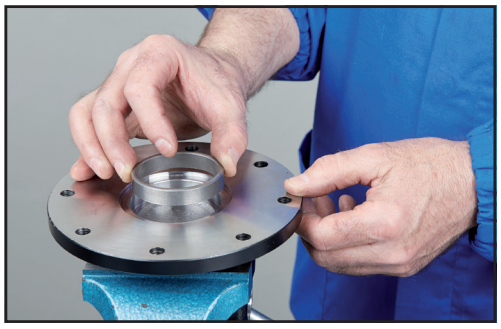

The procedure refers to the operations for assembling an FFV34 friction limiter. The other models can be assembled in the same way.

1. Apply a small amount of grease onto the bushing surface and install it on the flanged yoke.

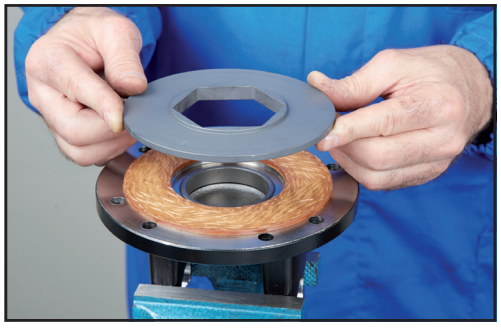

2. Install all the other components in the sequence shown in the exploded view.

   ATTENTION: Ensure that all the friction discs and the metal surfaces in contact with them are perfectly clean. The presence of dirt or grease may compromise the final friction calibration value.

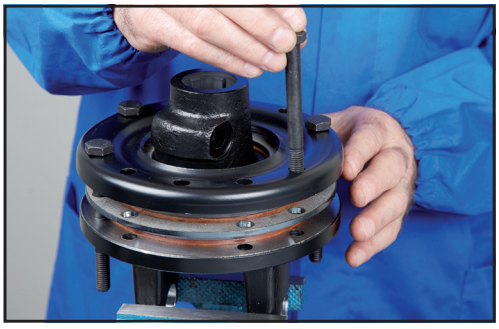

3. Insert the 8 screws with their head resting on the thrust plate.
4. Tighten all the nuts until they are in contact with the springs.
5. Tighten the bolts progressively (e.g., half a turn for each bolt) in order to compress the springs evenly up to the height h provided for. The tables in the following page provide the spring height h values according to the limiter model and the required calibration. Use a venier caliper to verify the compression of each spring, by measuring the height h, as shown in the figure.
   The height of the spring can range between ±0.2 millimetres around the nominal value.

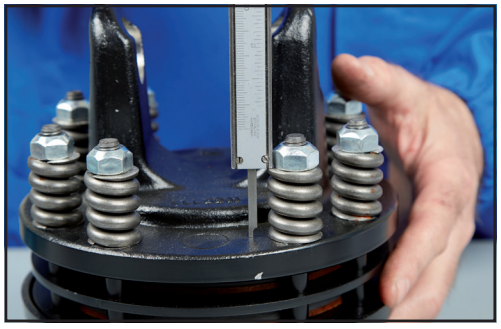

Do not over-tighten the bolts; this may endanger the function of the clutch.

Bondioli & Pavesi reccomends to not modify the torque setting estabilished by implement constructor - damages to implement, driveline or tractor may occur.

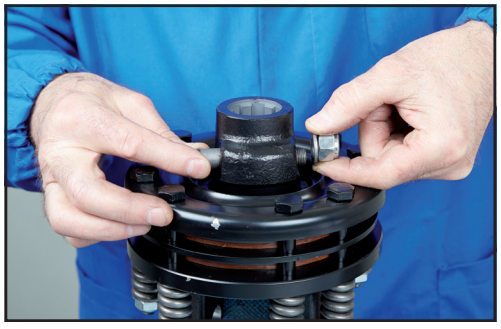

6. Insert the tapered bolt into its housing.

TORQUE SETTING TABLES

The tables below set out spring codes, thicknesses and compression “h” measured as shown in the figure for standard settings.
The height of the spring is measured next to each bolt and may be ± 0.2 mm of the listed value.

The tables also show the amount of rotation of each bolt required to achieve the next higher or lower setting, relative to the nominal setting (listed with no rotation noted on the bolt).
In addition to the listed settings, intermediate settings may be obtained by tightening or loosening the bolts proportionately.

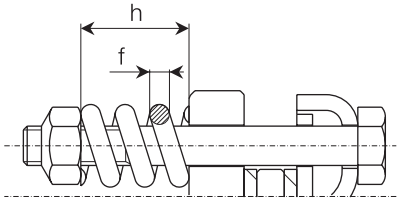

FFV22 Friction clutches
2 plates, diameter 159 mm, push pin

Spring code	f mm	Setting Nm	h mm	
351015001	6	400	30.0	
		600	29.5	
		800	29.0	

FFV32 Friction clutches
2 plates, diameter 180 mm, taper pin

Spring code	f mm	Setting Nm	h mm	
351022370	6	900	28.8	
		1000	28.5	
		1100	28.2	

FFV34 Friction clutches
4 plates, diameter 180 mm, taper pin

Spring code	f mm	Setting Nm	h mm	
351022370	6	1200	29.5	
		1450	29.0	
		1800	28.5	

FFV42 Friction clutches
2 plates, diameter 202 mm, taper pin

Spring code	f mm	Setting Nm	h mm	
351013370	7	1200	29.5	
		1450	29.2	
		1800	28.8	

FFV44 Friction clutches
4 plates, diameter 202 mm, taper pin

Spring code	f mm	Setting Nm	h mm	
351013370	7	1800	30.0	
		2400	29.5	
		3000	29.0	

FT friction clutches are equipped with Belleville springs, designed to apply nearly constant pressure, self-compensating for friction lining wear. Therefore the setting is maintained without adjustment over the life of the linings. FT friction clutches are non-adjustable. Torque is determined by the thickness of the Belleville spring.
Five models are available, with different diameters and number of friction linings.

All versions are available with treated hubs and driving plates to reduce corrosion and help prevent seizure. All versions are available with Release System.
The chart below indicates the diameter D, number of linings

Model	D mm	number of linings	attachment	
FT22	159	2	push pin	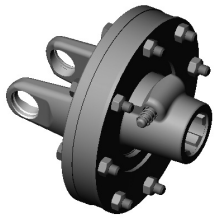
FT32	180	2	taper pin	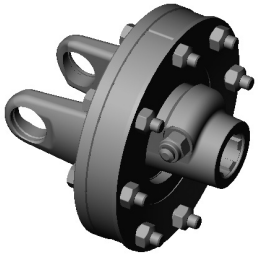
FT42	202			
FT34	180	4	taper pin	
FT44	202			

Friction clutches may become hot during use.
Do not touch!
Keep the area around the friction clutch clear of any material which could catch fire and avoid prolonged slipping that will generate excess heat and wear.

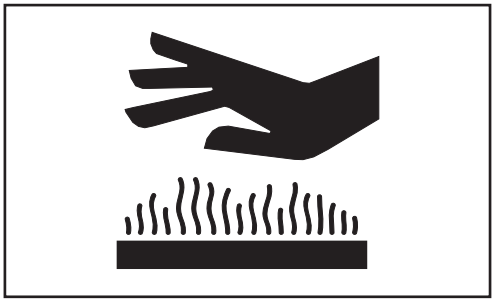

Release System

All the models of FT friction clutches are available with Release System, that permits reduction of the pressure on the linings during storage without disassembly of the clutch. The system also permits verification of proper operation after storage.
Pressure on the linings is reduced to a minimum by turning four socket headed screws (located on the flange yoke) completely into the flange yoke.
When turned completely out, the original pressure and torque setting of the clutch is restored.
The screws are only threaded on a portion of their body, so they are captured in the clutch and can be removed only upon disassembly of the clutch.
All friction clutches with the Release System are equipped with a hex wrench (code 399000030) to adjust the screws, and an operator's manual (code 399FRR001) to explain the proper use of the system.
To check proper function of a friction clutch with the Release System, the four socket screws are turned all the way in. Start the PTO at low sped so the clutch will slip for two or three seconds (longer slipping may cause damage). If the clutch will not slip after two or three attempts, disassemble the clutch and clean the contact surfaces, and replace any damaged parts.
Before operating a clutch with the Release System, pressure on the linings must be restored by turning the four set screws completely out.
The FT friction clutches with Release System are identified by the letter R at the end of model's name.

- FT22R (Ø155 mm, 2 friction linings)
- FT32R (Ø180 mm, 2 friction linings)
- FT42R (Ø202 mm, 2 friction linings)
- FT34R (Ø180 mm, 4 friction linings)
- FT44R (Ø202 mm, 4 friction linings)

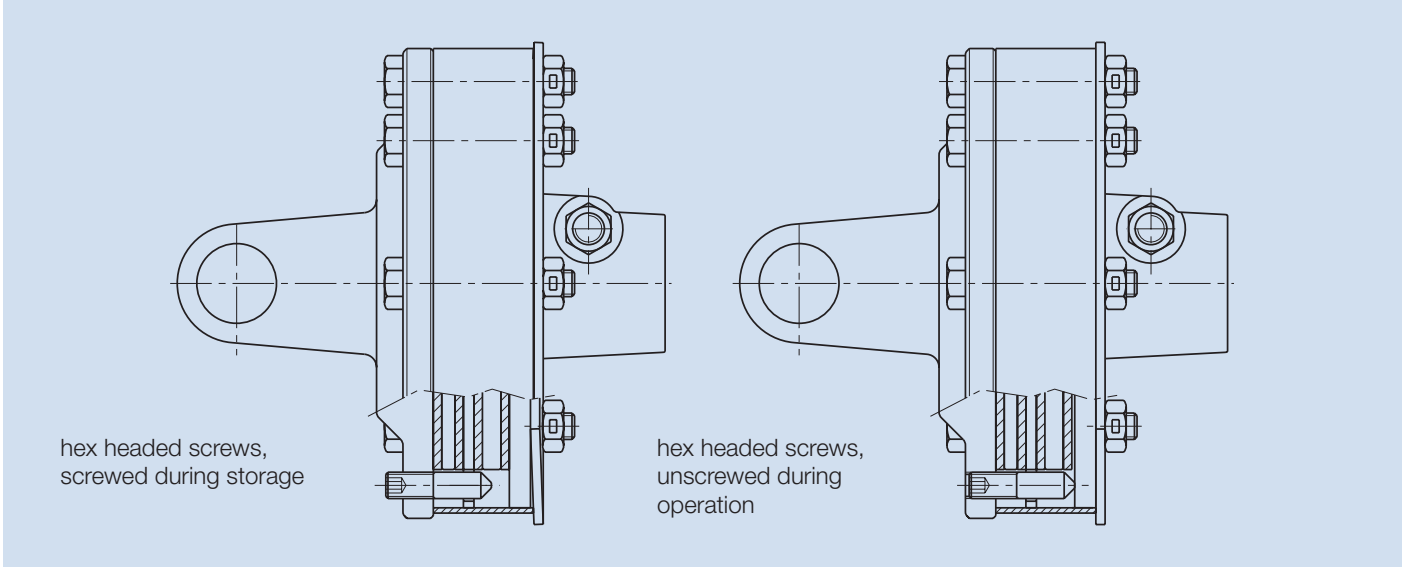

FT22

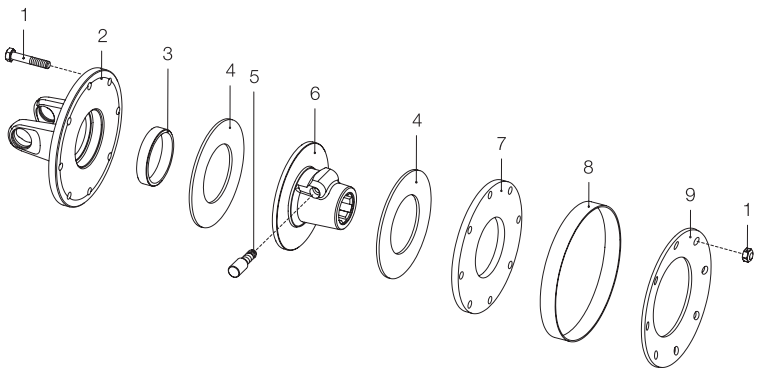

Ref	Description
1	Bolt
2	Flange yoke
3	Bushing
4	Friction lining
5	Push pin kit
6	Hub
7	Pressure disc
8	Adjustment band
9	Belleville spring

FT32 - FT42

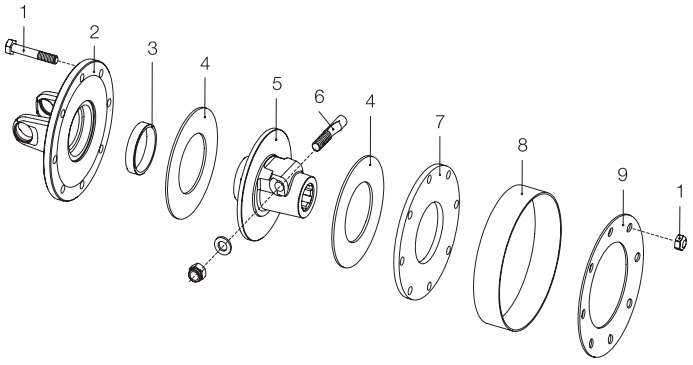

Ref	Description
1	Bolt
2	Flange yoke
3	Bushing
4	Friction lining
5	Hub
6	Taper bolt kit
7	Pressure disc
8	Adjustment band
9	Belleville spring

FT34 - FT44

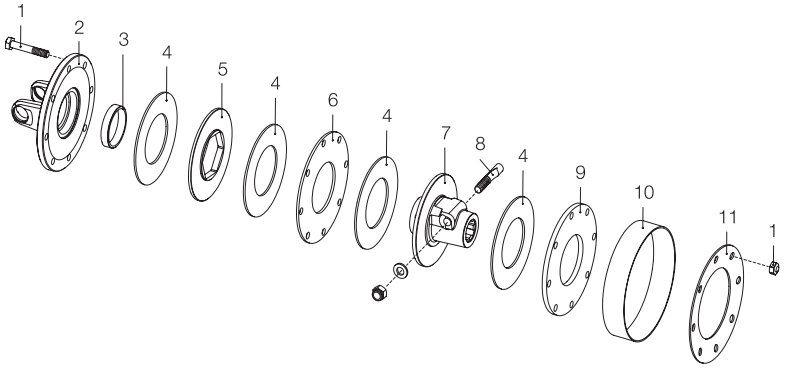

Ref	Description
1	Bolt
2	Flange yoke
3	Bushing
4	Friction lining
5	Driving disc
6	Inner disc (Th = 4 mm)
7	Hub
8	Taper bolt kit
9	Pressure disc (Th = 8 mm)
10	Adjustment band
11	Belleville spring

Friction torque limiters FT

FT22R

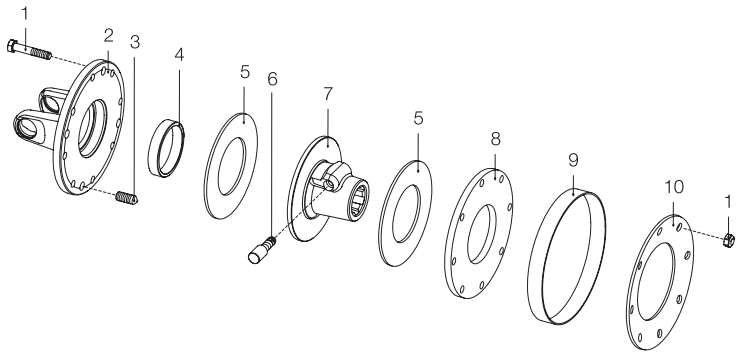

Ref	Description
1	Bolt
2	Flange yoke
3	Socket head screw
4	Bushing
5	Friction lining
6	Push pin kit
7	Hub
8	Pressure disc
9	Adjustment band
9	Belleville spring

FT32R - FT42R

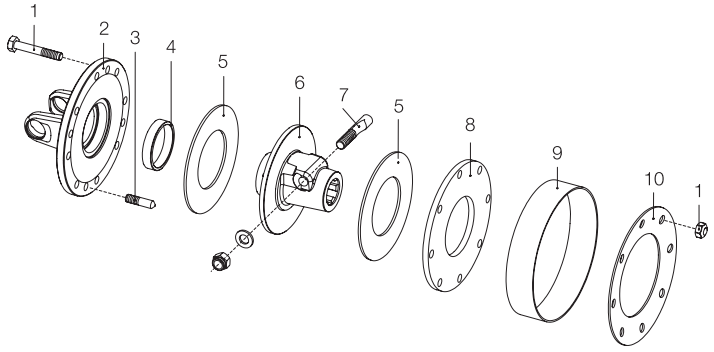

Ref	Description
1	Bolt
2	Flange yoke
3	Socket head screw
4	Bushing
5	Friction lining
6	Hub
7	Taper bolt kit
8	Pressure disc
9	Adjustment band
9	Belleville spring

FT34R - FT44R

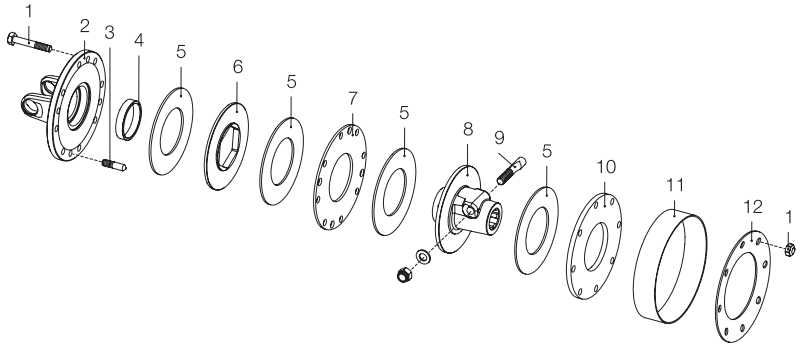

Ref	Description
1	Bolt
2	Flange yoke
3	Socket head screw
4	Bushing
5	Friction lining
6	Driving disc
7	Inner disc
8	Hub
9	Taper bolt kit
10	Pressure disc
11	Adjustment band
12	Belleville spring

DISASSEMBLY



The procedure refers to the operations for disassembling an FT34 friction limiter. The other models can be disassembled in the same way.
The components are not painted to allow the images to be clearer.

1. Remove the tapered bolt.

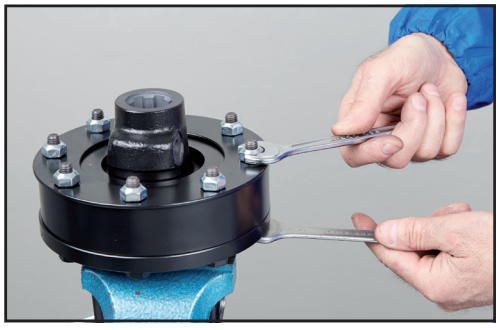

2. Remove all the bolts progressively in order to reduce the spring thrust evenly and gradually.



3. Remove the Belleville spring and remove the metal spacer band.
4. Remove all the components of the limiter, including the bushing.



5. Verify the efficiency of all the components.
   Sostituire eventuali parti usurate o danneggiate con componenti originali Bondioli & Pavesi.

   Note: The friction discs have a nominal thickness of 3.2 mm. We recommend replacing them when the thickness is below 2.5 mm. Clean the metal surface in contact with the friction discs.

ASSEMBLY



The procedure refers to the operations for assembling an FT34 friction limiter. The other models can be assembled in the same way.
The components are not painted to allow the images to be clearer.

1. Apply a small amount of grease onto the bushing surface and install it on the flanged yoke.

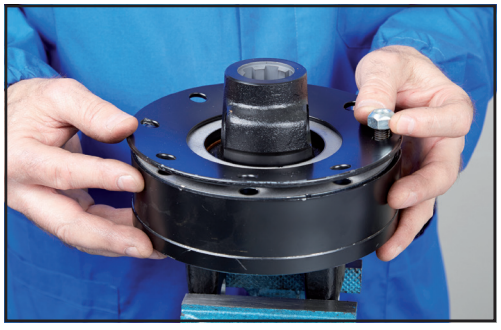

2. Install all the other components in the sequence shown in the exploded view.

   ATTENTION: If the device is equipped with a“release system”, tighten the 4 Allen screws first and then all the other components. The Allen screws must be fully tightened onto the flange yolk to prevent them from coming into contact with the thrust disc when tightening the bolts.

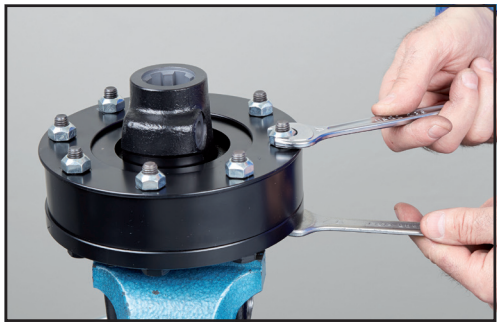

3. Insert the 8 screws with their head resting on the flange yoke.
4. Tighten all the nuts until they are in contact with the springs.

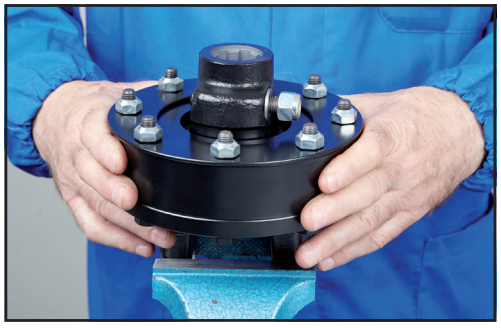

5. Tighten the bolts progressively (e.g., half a turn for each bolt) in order to compress the spring evenly until it adheres to the metal spacer band.

   

   Appropriate adhesion is obtained by tightening the bolts until the Belleville spring blocks the band and by loosening each nut by 1/4 of a turn.

   According to the limiter model, the tables on the following page show the necessary spring codes to obtain the indicated calibrations.

Do not over-tighten the bolts; this may endanger the function of the clutch.

Bondioli & Pavesi reccomends to not modify the torque setting estabilished by implement constructor - damages to implement, driveline or tractor may occur.

TORQUE SETTING TABLES

The torque setting of FT friction clutches is determined by the Belleville spring. The tables below show the spring codes for each friction clutch and standard setting.

FT22 and **FT22R** Friction clutches 2 plates, diameter 155 mm, push pin	
Setting Nm	Belleville spring code
400	367FT220A
500	367FT220C
600	367FT220D
800	367FT220E

FT32 and **FT32R** Friction clutches 2 plates, diameter 180 mm, taper pin	
Setting Nm	Belleville spring code
900	367FT320A
1000	367FT320C
1100	367FT320D

FT34 and **FT34R** Friction clutches 4 plates, diameter 180 mm, taper pin	
Setting Nm	Belleville spring code
1200	367FT340A
1450	367FT340C
1800	367FT340D

FT42 and **FT42R** Friction clutches 2 plates, diameter 202 mm, taper pin	
Setting Nm	Belleville spring code
1200	367FT420A
1450	367FT420C
1800	367FT420D

FT44 and **FT44R** Friction clutches 4 plates, diameter 202 mm, taper pin	
Setting Nm	Belleville spring code
1800	367FT440A
2200	367FT440C
2400	367FT440D
2600	367FT440E

Combination friction torque limiters and overrunning clutches

Three versions of combination friction torque limiter and overrunning clutch are available: **FNV** (adjustable), **FFNV** (adjustable), **FNT** (non-adjustable). They have two different diameters:
- **34** (D = 180 mm),
- **44** (D = 202 mm).

All versions are available with treated hubs and driving plates to reduce corrosion and help prevent seizure.
The chart below indicates the diameter D, number of linings, il sistema di fissaggio e il tipo di molla montata.

FNT friction clutches are available with Release System. This system permits the spring pressure to be reduced during storage, without requiring disassembly of the torque limiter.

Drivelines with **FFNV** clutches (with coil springs) are not EU marked because the shield does not cover the entire inner yoke as required by Machinery Directive 2006/42/CE.

Model	D mm	number of linings	fastening system	type of spring	
FNV34	180	4	taper pin	belleville spring adjustable setting	
FNV44	202				
FFNV34	180	4	taper pin	helical springs adjustable setting	
FFNV44	202				
FNT34	180	4	taper pin	belleville spring With fixed calibration spacer band	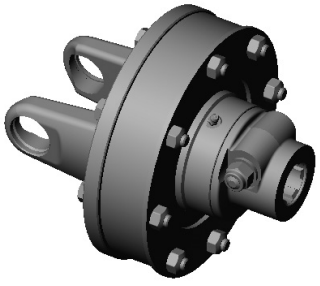
FNT44	202				

Friction clutches may become hot during use.
Do not touch!
Keep the area around the friction clutch clear of any material which could catch fire and avoid prolonged slipping that will generate excess heat and wear.

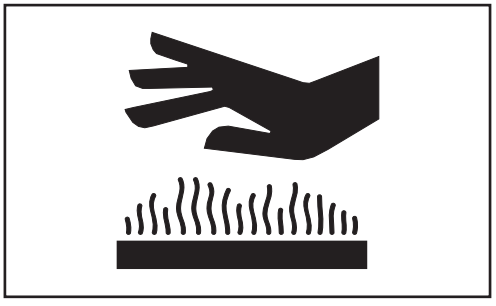

Combination friction torque limiters and overrunning clutches

FNV34 - FNV44

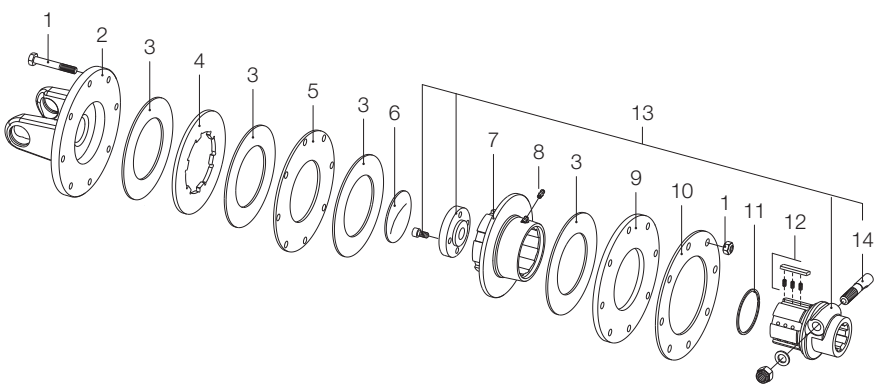

Ref	Description
1	Bolt
2	Flange yoke
3	Friction lining
4	Driving disc
5	Inner disc
6	Locking plate
7	Hub
8	Grease fitting
9	Pressure disc
10	Belleville spring
11	Snap ring
12	Pawl + springs kit
13	Hub with taper bolt, screws and locking plug
14	Taper bolt kit

FFNV34 - FFNV44

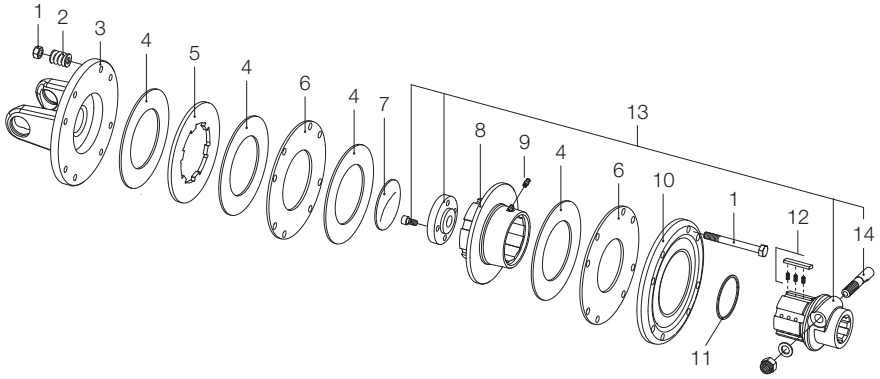

Ref	Description
1	Bolt
2	Coil spring
3	Flange yoke
4	Friction lining
5	Driving disc
6	Inner disc
7	Locking plate
8	Hub
9	Grease fitting
10	Pressure plate
11	Snap ring
12	Pawl + springs kit
13	Hub with taper bolt, screws and locking plug
14	Taper bolt kit

FNT34 - FNT44

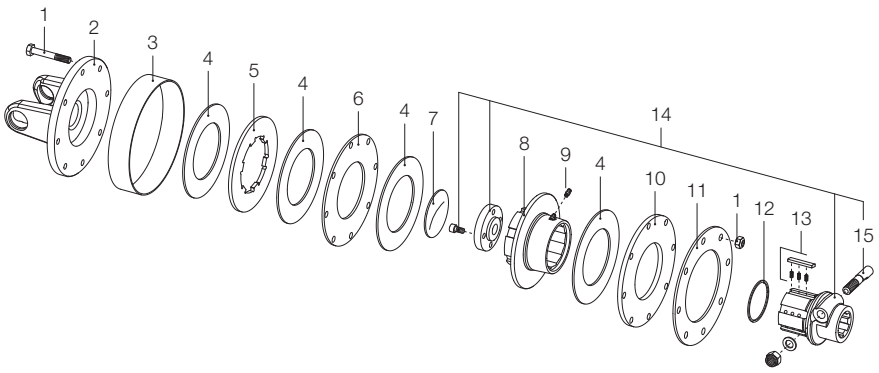

Ref	Description
1	Bolt
2	Flange yoke
3	Adjustment band
4	Friction lining
5	Driving disc
6	Inner disc
7	Locking plate
8	Hub
9	Grease fitting
10	Pressure disc
11	Belleville spring
12	Snap ring
13	Pawl + springs kit
14	Hub with taper bolt, screws and locking plug
15	Taper bolt kit

FNT34R - FNT44R with Release System

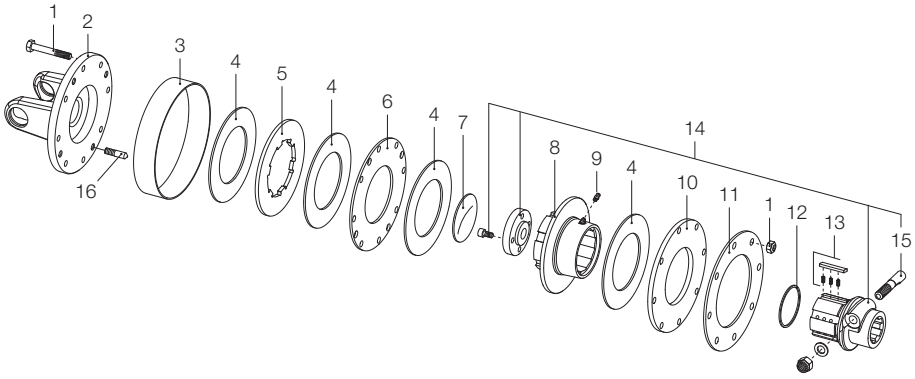

Ref	Description
1	Bolt
2	Flange yoke
3	Adjustment band
4	Friction lining
5	Driving disc
6	Inner disc
7	Locking plate
8	Hub
9	Grease fitting
10	Pressure disc
11	Belleville spring
12	Snap ring
13	Pawl + springs kit
14	Hub with taper bolt, screws and locking plug
15	Taper bolt kit
16	Socket head screw

Combination friction torque limiters and overrunning clutches

DISASSEMBLY



The procedure refers to the operations for disassembling an FNT34 friction limiter with built-in overrunning clutch. The other models can be disassembled in the same way.

1. Remove the grease fitting.
2. Disassemble the clutch according to the procedures shown in chapters:
   - For FNV see chapter 19 “FV friction limiters”;
   - For FFNV see chapter 20 “FFV friction limiters”;
   - For FNT see chapter 21 “FT friction limiters”.



3. Remove the seal plate at the bottom of the hub.
   Use a pin punch to carry out this operation. Fit it into the hub, inside the central hole of the cover and hit it.

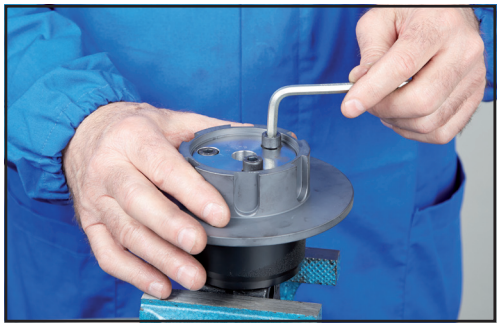

4. Loosen the screws that tighten the cover.



5. Remove the overrunning clutch hub, keeping the pawls pressed. Upon removing the hub, slowly release the pawls.



6. Verify the efficiency of all the components.
   Replace any worn or damaged components with original Bondioli & Pavesi spare parts.

ASSEMBLY

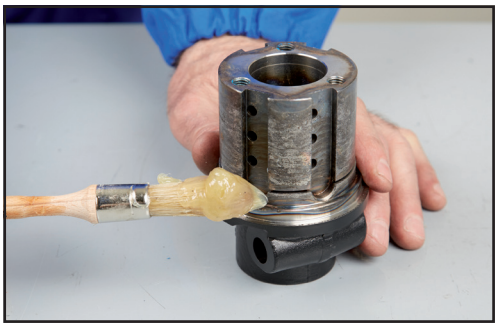

The procedure refers to the operations for assembling an FNT34 friction limiter with built-in overrunning clutch. The other models can be assembled in the same way.
The components are not painted to allow the images to be clearer.

1. Grease the overrunning clutch and the pawl housings on the hub.



2. Insert the springs and the pawls into the hub in the illustrated position.

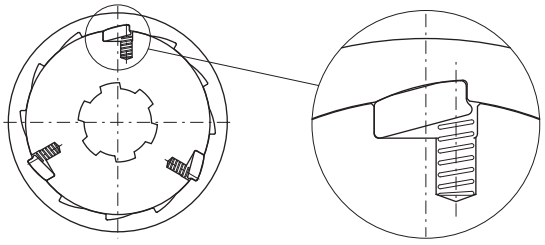



3. Compress the pawls and insert the inner hub into the overrunning clutch housing.
   We recommend using a metal band to keep the pawls in place while fitting them.

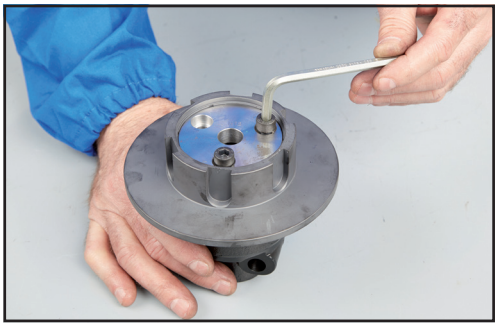

4. Put a drop of threadlocker on each screw and tighten the cover by means of the appropriate screws on the rear part of the hub.

   ATTENTION: The spare screws supplied with the kit, which includes also the hub with a tapered bolt and the cover, are already provided with threadlocker.

5. Ensure overrunning clutch's proper operation

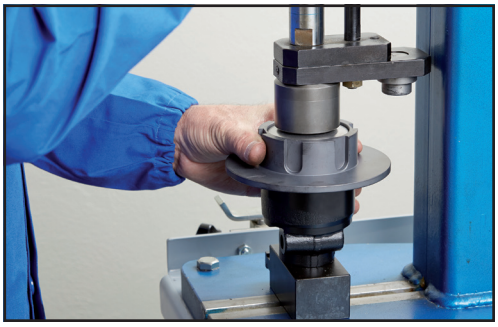

6. Remove the seal plate (7).
   The cover may have to be replaced should the disassembled one be deformed. The cover must adhere to the inner surface of the hub to prevent grease from coming out from the hub and onto the friction discs.

ASSEMBLY



The seal plate must fully enter into its housing to prevent the overrunning clutch grease to reach the friction discs.

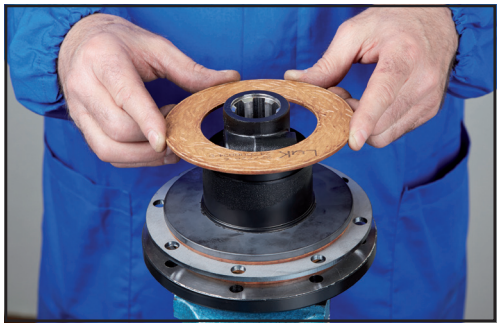

7. Assemble the clutch according to the procedures shown in chapters:
   - For FNV see chapter 19 “FV friction limiters”;
   - For FFNV see chapter 20 “FFV friction limiters”;
   - For FNT see chapter 21 “FT friction limiters”.

   To adjust the calibration, refer to the tables shown on the following pages.

   ATTENTION: Ensure that the friction discs and the metal surfaces in contact with them are clean. The presence of dirt or grease may compromise the final friction calibration value.



8. Tighten the grease fitting and lubricate the device.

TORQUE SETTING TABLES **FNV**

The tables below set out spring codes, thicknesses “t” and compression “h” measured as shown in the figure for standard settings. The height of the spring is measured next to each bolt and may be ± 0.2 mm of the listed value.
The tables also show the amount of rotation of each bolt required to achieve the next higher or lower setting, relative to the nominal setting (listed with no rotation noted on the bolt).
In addition to the listed settings, intermediate settings may be obtained by tightening or loosening the bolts proportionately.

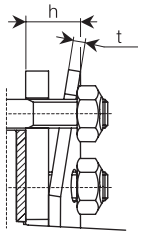

FNV34 Friction clutches
4 plates, diameter 180 mm, taper pin

Spring code	t mm	Setting Nm	h mm	
367008860	3.75	1200	18.0	
		1600	17.5	
		2000	16.5	

FNV44 Friction clutches
4 plates, diameter 202 mm, taper pin

Spring code	t mm	Setting Nm	h mm	
367009870	4.25	1800	19.0	
		2400	18.5	
		2800	18.0	

TORQUE SETTING TABLES **FFNV**

The tables below show the spring code, diameter “f” and compression height “h” for standard settings.
Check the compression of each spring using a sliding caliper. The height of the spring may be ± 0.2 mm of the “h” value shown.
The tables also show the amount of rotation of each bolt required to achieve the next higher or lower setting, relative to the nominal setting (listed with no rotation noted on the bolt).
In addition to the listed settings, intermediate settings may be obtained by tightening or loosening the bolts proportionately.

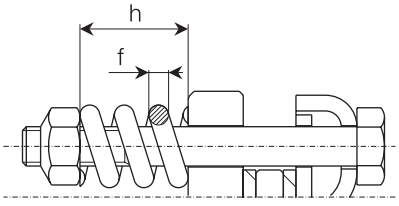

FFNV34 Friction clutches
4 plates, diameter 180 mm, taper pin

Spring code	f mm	Setting Nm	h mm	
351022370	6	1200	29.5	
		1450	29.0	
		1800	28.5	

FFNV44 Friction clutches
4 plates, diameter 202 mm, taper pin

Spring code	f mm	Setting Nm	h mm	
351013370	7	1800	30.0	
		2400	29.5	
		2800	29.0	

Combination friction torque limiters and overrunning clutches

TORQUE SETTING TABLES **FNT**

The torque setting of FNT friction clutches is determined by the Belleville spring. The tables below show the spring codes for each friction clutch and standard setting.

FNT34 and **FT34R** Friction clutches 4 plates, diameter 180 mm, taper pin	
Setting Nm	Belleville spring code
1200	367FT340A
1450	367FT340C
1800	367FT340D

FNT44 and **FNT44R** Friction clutches 4 plates, diameter 202 mm, taper pin	
Setting Nm	Belleville spring code
1800	367FT440A
2200	367FT440C
2400	367FT440D
2600	367FT440E

Series 100
80° CV joint shaft

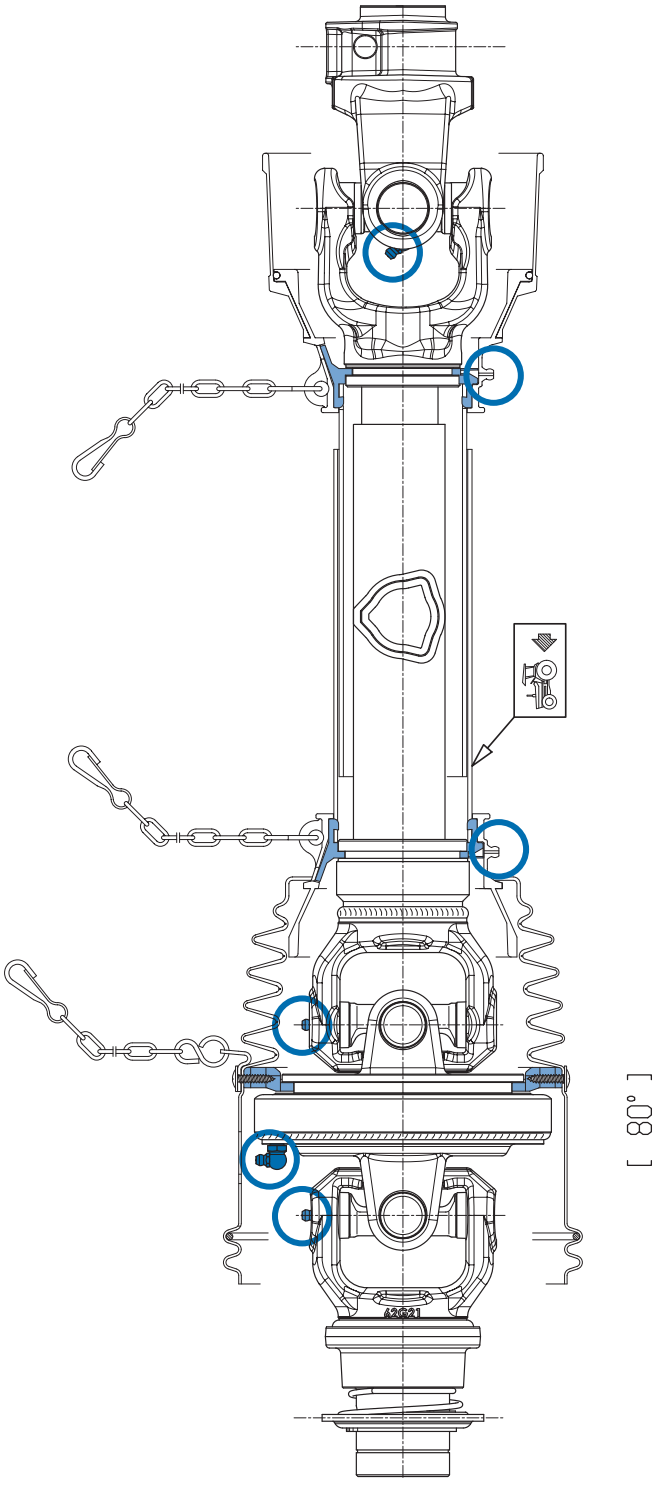

SFT range
Shaft with Free Rotation and Greasing System pipes

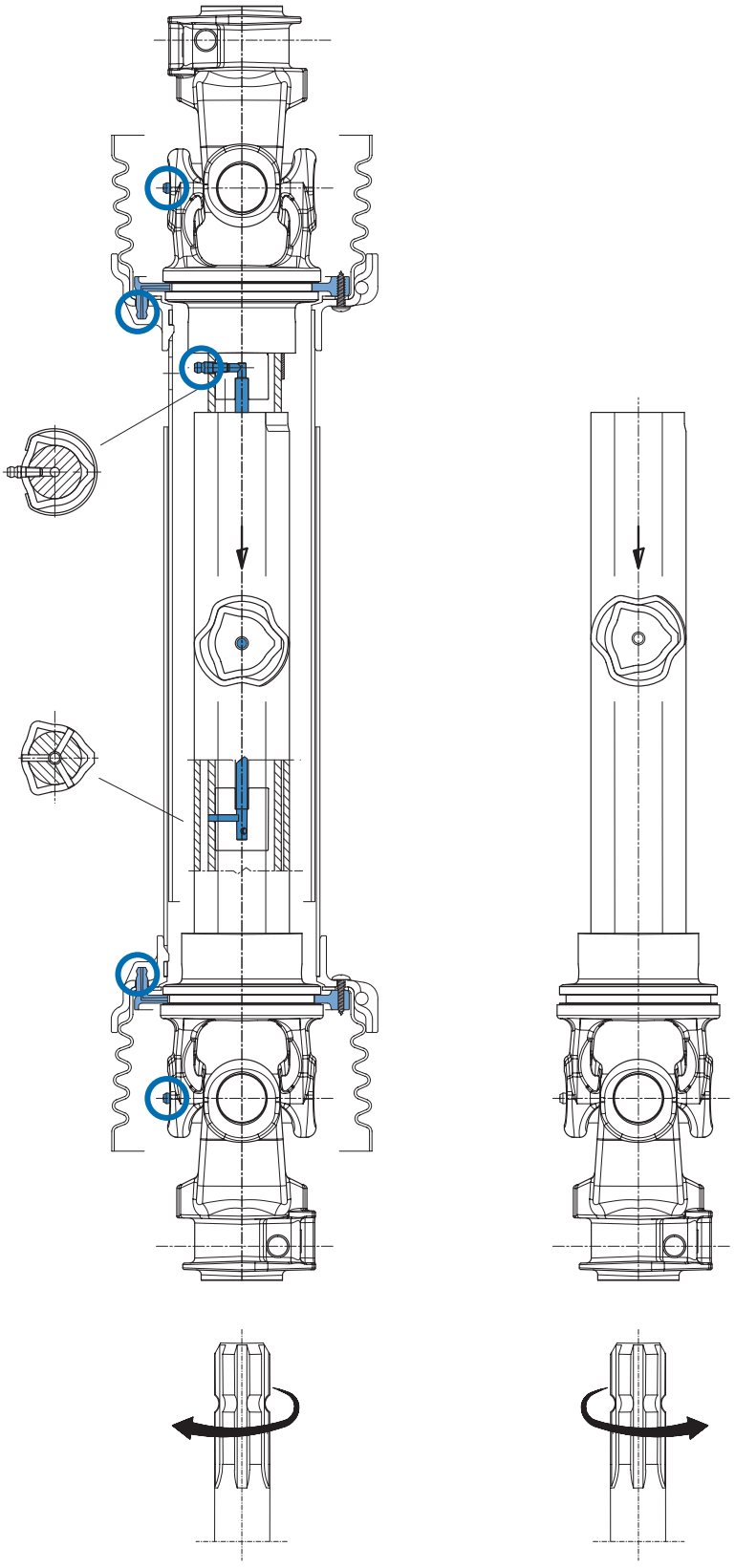

BONDIOLI & PAVESI

SFT range
Shaft with grooved telescopic pipes

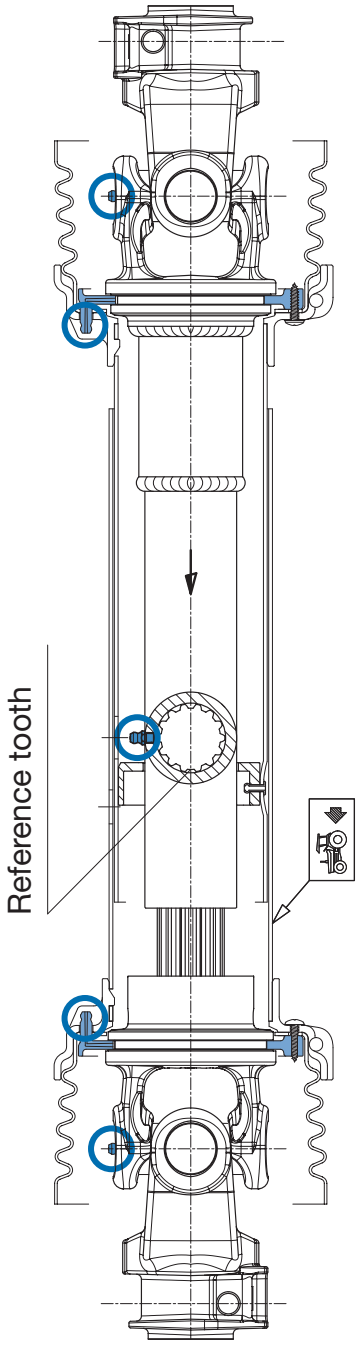

SFT range
80° and 50° CV joint shaft
Greasing System and Single Chain

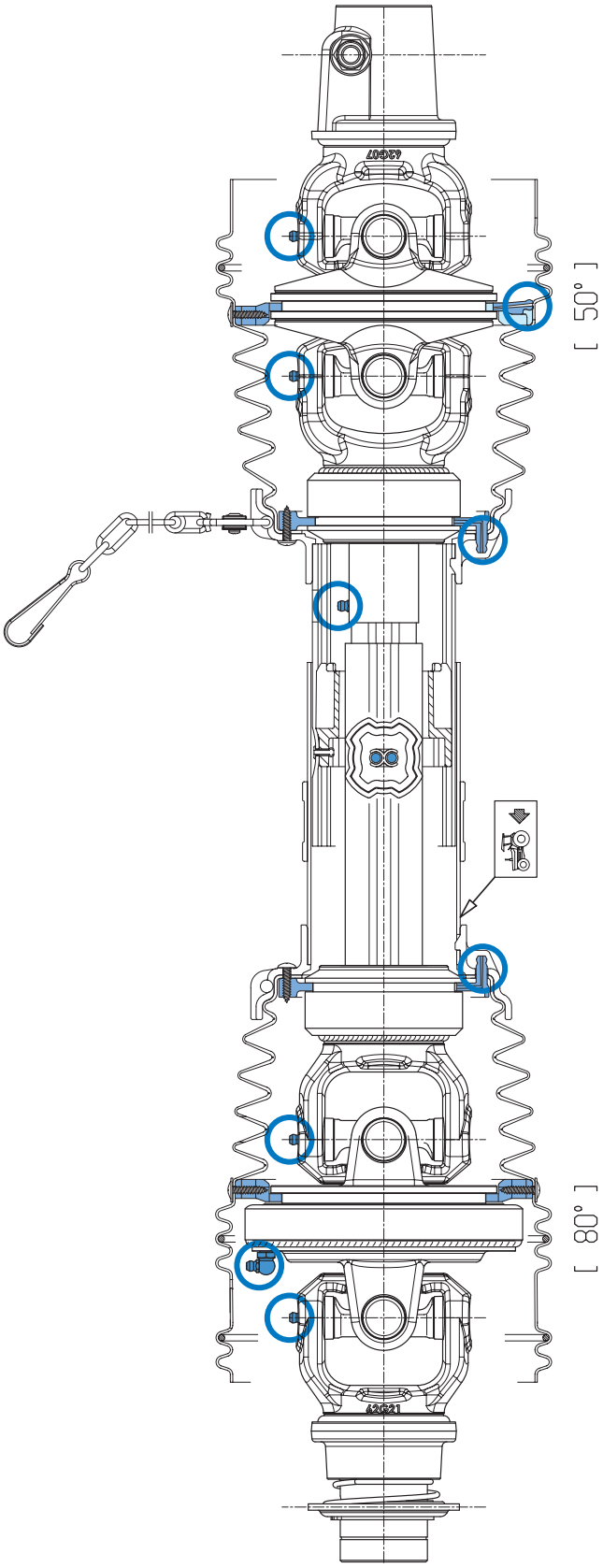

Global
80° CV joint shaft

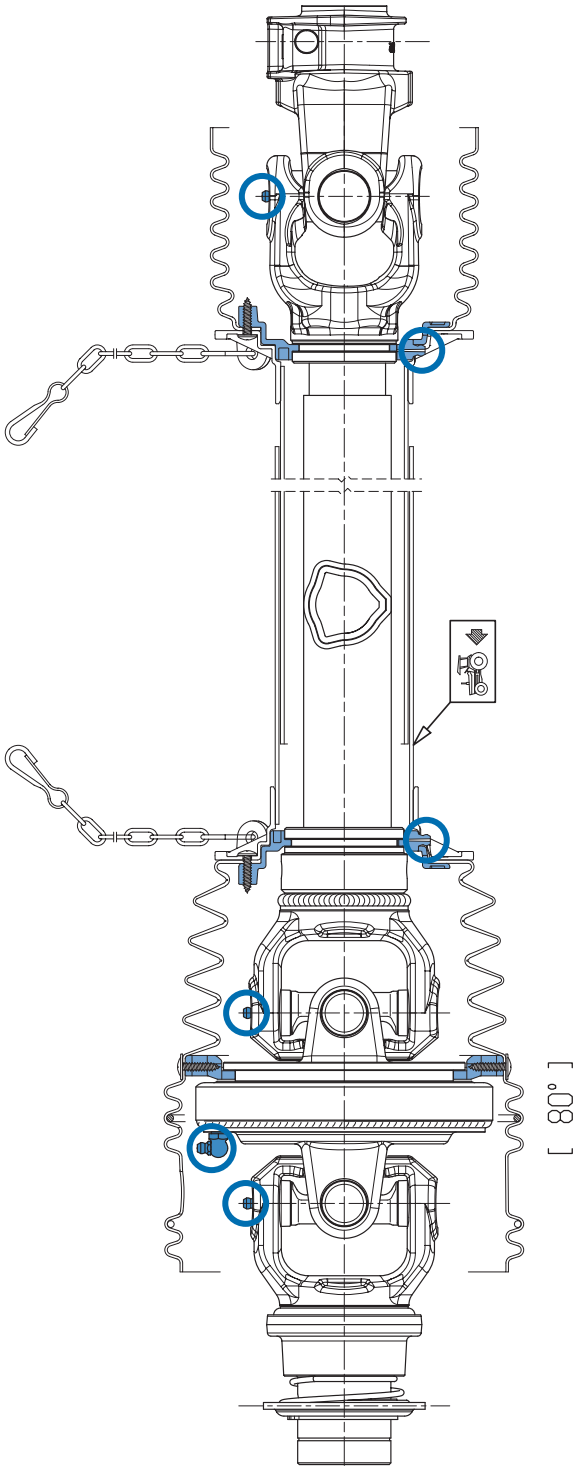

398C37600-0915 -100-I-C Printed in Italy

BONDIOLI & PAVESI

Professionals in motion

BONDIOLI & PAVESI SpA
Via 23 Aprile, 35/a - I - 46029 SUZZARA (MN) - Tel.: +39 03765141 - Telefax +39 0376514444 - E-mail bypy@bypy.it - **www.bondioli-pavesi.com**