DHZ 020

BONDIOLI & PAVESI
邦贝 杭州

China
Drivelines catalogue

DHZ 020

BONDIOLI & PAVESI
邦贝 杭州

© BONDIOLI & PAVESI SpA

No part of this manual may be reproduced without specific permission from Bondioli & Pavesi.
All data and codes contained in this catalog replace and supersede any information given by previous publications. Consequently data provided in previous publications may no longer be valid. Bondioli & Pavesi reserves the right to change specifications without prior notice or obligation.

Index

1. Range 4
   1 to 6 sizes and G9 size 4
   Size and ratings 4

2. Code and dimensions 6
   Cardan joint driveline 6

3. Cross kits 8
   Crosses with Bondioli & Pavesi Italy bearings 8
   Crosses with Bondioli & Pavesi China bearings 8

4. Telescoping members 9

5. Driveline length 10

6. Safety labels and operator's manuals 11

7. Safety shields 15
   Complete shield kit 15
   Shield cones configurations 16
   Code for complete shield kit as spare part 17
   Spare Parts 18

8. Yokes 19
   Push pin yokes 19
   RT Ball collar yokes 20
   Spring pin hole yokes 21
   Round bore cutter yokes 21
   Round bore cutter yokes and grease fitting 22
   Outer tube yokes 23
   Inner tube yokes 23

9. Overrunning clutches 24
   RA1 24
   RA2 26

10. Shear bolt torque limiters 28
    LB 28

11. Friction torque limiters FFL 30
    FFL22A 30
    FFL32A 32
    FFL42A 34
    FFL34A 36

12. Friction torque limiters FFF 38
    FFF22A 38
    FFF32A with push pin 40
    FFF32A with taper pin 42
    FFF42A 44
    FFF34A 46

13. Specifications:
    Size G9 48

Range

1 to 6 sizes

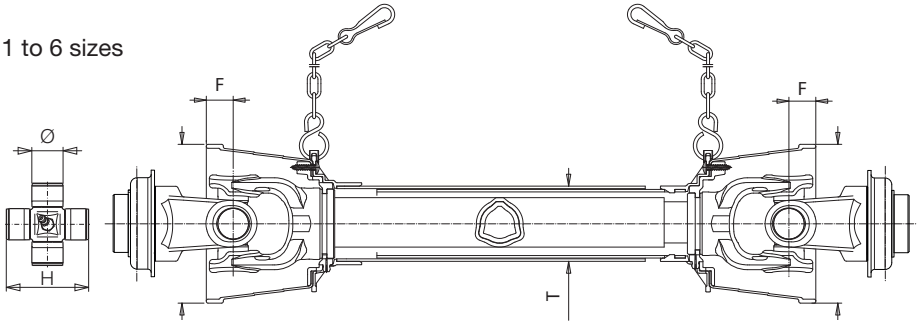

G9 size

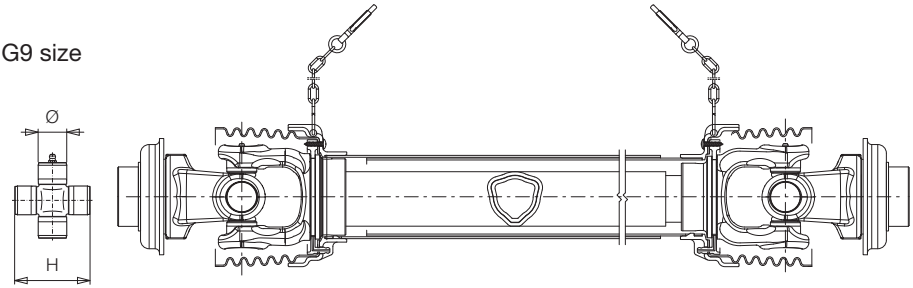

Size and ratings

Size				540 rpm				1000 rpm				ASAE Classes	
				Pn		Mn		Pn		Mn			
	Ø mm	H mm	Cross Kit	kW	CV	Nm	in lb	kW	CV	Nm	in lb	RD	HD
1	22,0	54,0	BP China	10	14	180	1600	15	21	146	1300		
2	23,8	61,3	BP Italy	15	21	270	2400	23	31	220	1950	2	1
			BP China	13	17	220	1950	18	25	178	1600		
4	27,0	74,6	BP Italy	26	35	460	4050	40	55	380	3350	3	3
			BP China	23	31	405	3600	35	47	334	2950		
5	30,2	79,4	BP Italy	35	47	620	5500	54	74	520	4600	4	3
			BP China	30	41	530	4700	46	63	442	3900		
6	30,2	91,4	BP Italy	47	64	830	7350	74	100	710	6250	4	4
			BP China	38	54	705	6250	63	86	604	5350		
***G9**	34,9	106,0	BP Italy	70	95	1240	10950	110	150	1050	9300	6	5

* See specifications pag. 48

Pn : Nominal power defined as the power associated with a 1000 hours lifetime of a joint operating joint angle 5° at 540 and 1000 rpm.
Mn : Nominal torque corresponding to the nominal power Pn..

BONDIOLI & PAVESI 邦贝 杭州

1 to 6 sizes

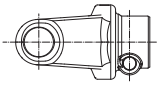

Push pin yokes

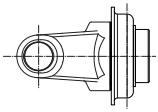

RT Ball collar yokes

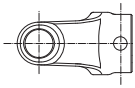

Spring pin hole yokes

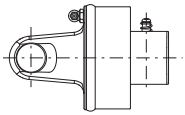

RA
overrunning clutches

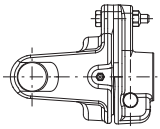

LB
shear bolt clutches

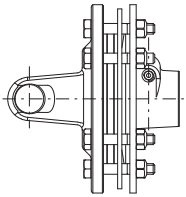

FFL
friction clutches

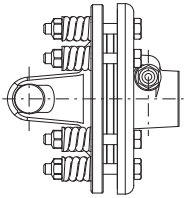

FFF
friction clutches

G9 size

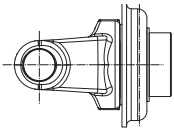

RT Ball collar yokes

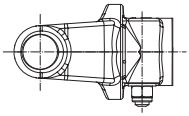

Taper pin yokes

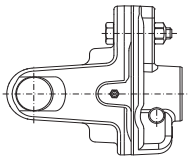

LB
shear bolt clutches

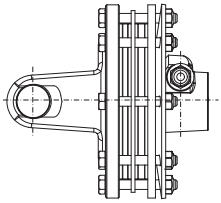

FV
friction clutches

Code and dimensions

Cardan joint driveline

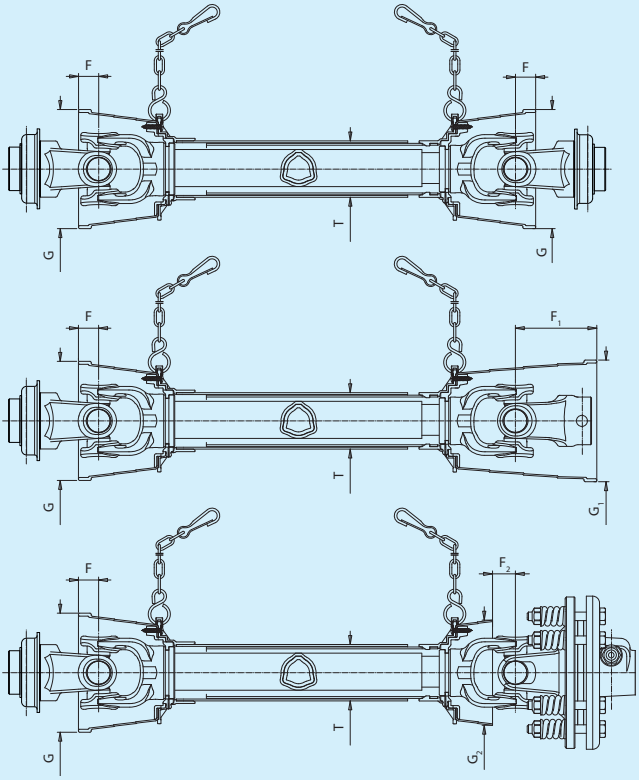

1 to 6 sizes

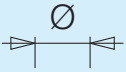

G9 size

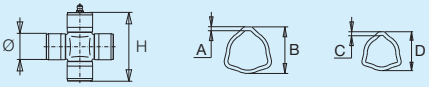

Size	Ø mm	H mm	A mm	B mm	C mm	D mm	G mm	F mm	T mm	F_1 mm	G_1 mm	F_2 mm	G_2 mm
1	22,0	54,0	2,6	32,5	4,0	26,5	132	23	61	92	141	- -	- -
2	23,8	61,3	3,2	36,0	4,0	29,0	132	20	61	89	141	- -	- -
4	27,0	74,6	3,4	43,5	4,0	36,0	140	24	67	96	143	19	125
5	30,2	79,4	3,0	51,5	4,0	44,8	165	33	81	116	176	18	145
6	30,2	91,4	4,0	54,0	4,0	44,8	165	26	81	109	176	25	145
***G9**	34,9	106,0	4,0	63,0	4,0	54,0	- -	- -	- -	- -	- -	- -	- -

*See specifications pag. 48

BONDIOLI & PAVESI 邦贝 杭州

Code for cardan joint drivelines sizes 1 to 6

(G9 - see specifications pag. 48)

1 2 3
B **C** **7**

BC7 : Standard driveline.

4

Cross Kit
1 - Bondioli & Pavesi Italy.
2 - Bondioli & Pavesi China.

5
0

Telescoping members
Normal triangular tubes.

6

Size
1 - 2 - 4 - 5 - 6

7 8 9

Length
041 - 046 - 051 - 056 - 061 - 066 - 071 - 076 - 081 - 086 - 091 - 101 - 111 - 121
See page 10 “Length“.

10 11

Safety labels and instruction manuals and restraint chains
CE - Drivelines with CE mark.
CU - Drivelines with CE mark and both CE and US labels.
US - Drivelines for North America (USA, Canada, Mexico), without restraint chains.
UC - Drivelines for North America (USA, Canada, Mexico), with restraint chains.
JP - Drivelines for Japan.
FX - Drivelines for other countries or CEE-EFTA countries not bearing CE mark

12 13 14

Driver (or tractor) end
Specify the three-digit code for the yoke.
See specifications for the selected driveline size.

15 16 17

Driven (or implement) end
Specify the three-digit code for the yoke, torque limiter or clutch.
See specifications for the selected driveline size.

18

Optional position
Add to code the letter “**N**“ to require optional extended cone on driven end.
Add an “**X**“ letter at the end of the code for drive shaft running at 1000 min^{-1}.

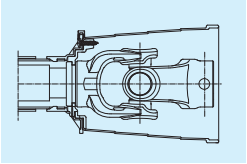

All rotating parts must be guarded. The shields on the tractor and on the implement work with the integral driveline guard to form an interactive guarding system.
For primary drivelines (i.e. the driveline connecting the tractor PTO to the initial power input connection on the implement), torque limiters or overrunning clutches must be fitted on the implement end of the driveline.

Cross kits

The codes refer to the cross kit as a spare part - complete with the four snap rings required for assembly. They are supplied in single item or multiple item packs. The pack quantity is indicate by the numbers following the “R” in the code.

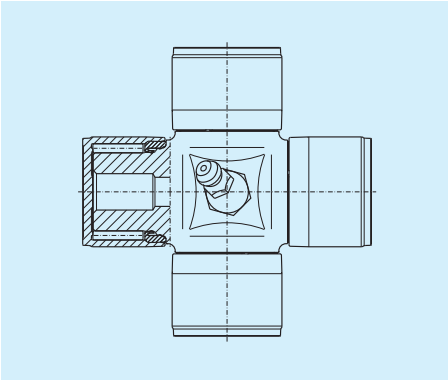

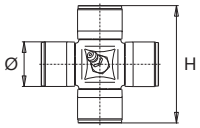

Crosses with Bondioli & Pavesi Italy bearings

	Ø mm	H mm	Cross Kit Code	Multiple-item pack code
1	- -	- -	- -	- -
2	23,8	61,3	41202A001A	41202A001AR30
4	27,0	74,6	41204A001A	41204A001AR25
5	30,2	79,4	41205A001A	41205A001AR40
6	30,2	91,4	41206A001A	41206A001AR30

Crosses with Bondioli & Pavesi China bearings

	Ø mm	H mm	Cross Kit Code	Multiple-item pack code
1	22,0	54,0	41201A005A	41201A005AR50
2	23,8	61,3	41202A005A	41202A005AR30
4	27,0	74,6	41204A005A	41204A005AR25
5	30,2	79,4	41205A005A	41205A005AR40
6	30,2	91,4	41206A005A	41206A005AR30

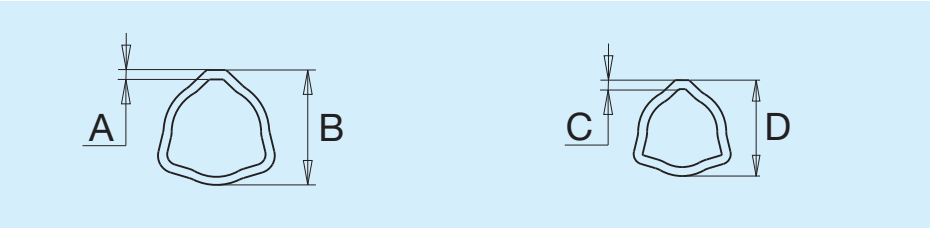

	Outer tube				Inner tube			
	A mm	B mm	Profile code	1 m Cut / Drilled tube code	C mm	D mm	Profile code	Cut / Drilled tube code
1	2,6	32,5	12503	225021000R	4,0	26,5	12502	225011000R
2	3,2	36,0	12505	225051000R	4,0	29,0	12504	225041000R
4	3,4	43,5	12508	225121000R	4,0	36,0	12507	225101000R
5	3,0	51,5	12510	225701000R	4,0	44,8	12537	225671000R
6	4,0	54,0	12512	225211000R	4,0	44,8	12537	225671000R

Tubes for spare parts are supplied either in 1,5 meter sections, 1 meter sections, 1-meter tubes drilled for roll pin.
Add “1500” or “1000” to the profile code to order 1,5 meter or 1 meter tubes respectively.
The listed drilled tube codes are shown in chart.

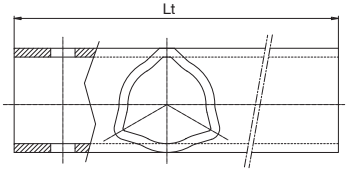

Driveline length

Driveline length L is defined as the distance between the centres of the crosses, with the driveline fully collapsed.
Driveline length is represented in the code by the length L in centimetres.
Standard available lengths with codes are shown in the table below.

Max recommended lengths:
Lw : max working length;
Lt : max temporary length;
Ls : max length at stand still

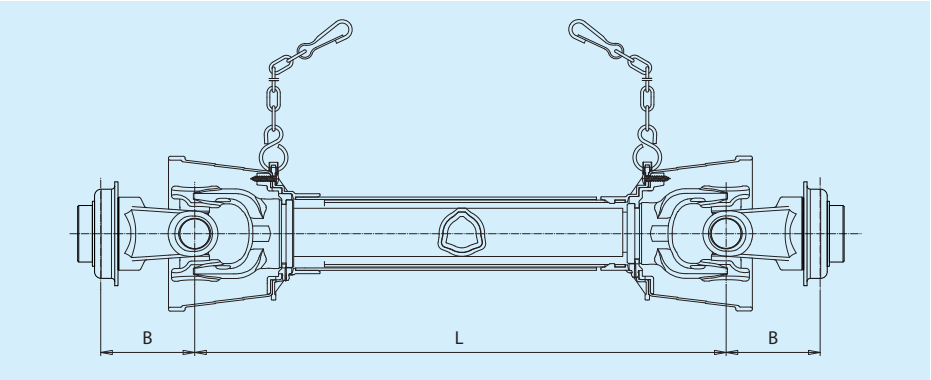

Code		041	046	051	056	061	066	071	076	081	086	091	101	111	121
Length L (mm)		410	460	510	560	610	660	710	760	810	860	910	1010	1110	1210
1	Lw	514	612	687	762	837	912	987	1062	1137	1212	1287	*1437	*1587	*1737
	Lt	564	662	746	829	912	996	1079	1162	1246	1329	1412	*1579	*1746	*1912
	Ls	593	688	775	863	950	1038	1125	1213	1300	1388	1475	1650	1825	2000
2	Lw	506	606	683	758	833	908	983	1058	1133	1208	1283	1433	*1583	*1733
	Lt	556	656	740	824	907	990	1074	1157	1240	1324	1407	1574	*1740	*1907
	Ls	585	682	769	857	944	1032	1119	1207	1294	1382	1469	1644	1819	1994
4	Lw	490	590	675	750	825	900	975	1050	1125	1200	1275	1425	1575	*1725
	Lt	540	640	730	813	896	980	1063	1146	1230	1313	1396	1563	1730	*1896
	Ls	565	665	757	845	932	1020	1107	1195	1282	1370	1457	1632	1807	1982
5	Lw	- -	499	599	699	799	892	967	1042	1117	1192	1267	1417	1567	1717
	Lt	- -	574	674	774	874	969	1052	1136	1219	1302	1386	1552	1719	1886
	Ls	- -	647	745	833	920	1008	1095	1183	1270	1358	1445	1620	1795	1970
6	Lw	- -	485	585	685	785	885	960	1035	1110	1185	1260	1410	1560	1710
	Lt	- -	560	660	760	860	960	1043	1126	1210	1293	1376	1543	1710	1876
	Ls	- -	633	733	822	910	997	1085	1172	1260	1347	1435	1610	1785	1960

Lw and Lt refer to drivelines rotating at a maximum speed of 1000 rpm, except fot items marked *, which refer to a maximum speed of 540 rpm. For shaft lengths longer than those shows, or for speed higher than 1000 rpm, please contact Bondioli & Pavesi Engineering Department

Safety labels and operator’s manuals

Bondioli & Pavesi driveshafts are provided with safety labels and operator’s manuals as prescribed by international safety standards and regulations.

The country of destination of the driveline, and consequently the labels and operator’s manual are selected by the positions ten and eleven in the driveline code.

Drivelines bearing CE mark.
code **CE**

Operator’s manual
399UNI001

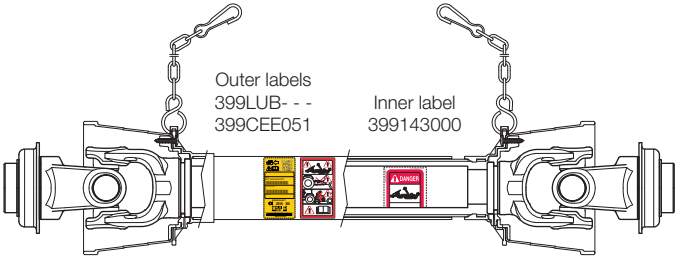

Drivelines bearing CE mark and both CE and US labels.
code **CU**

Operator’s manual
399UNI001

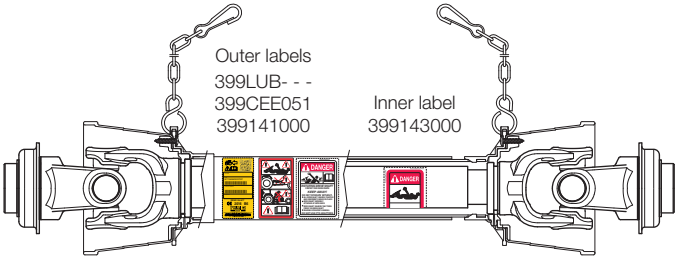

Drivelines for North America (USA, Canada, Mexico) without restraint chains.
code **US**

Operator’s manual
399UNI001

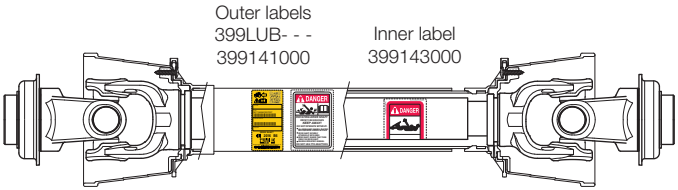

Safety labels and operator’s manuals

Drivelines for North America (USA, Canada, Mexico) with restraint chains.
code **UC** (**U2** for G9 size)

Operator’s manual
399UNI001

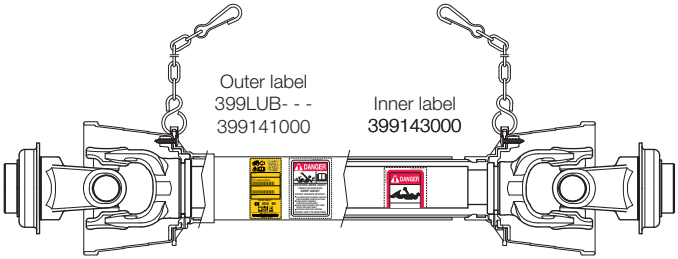

Drivelines made for Japan.
code **JP**

Operator’s manual
399UNI001

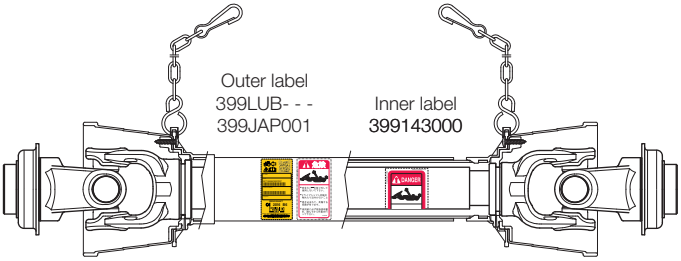

Drivelines made for other countries and CEE-EFTA countries not bearing CE mark.
code **FX**

Operator’s manual
399UNI001

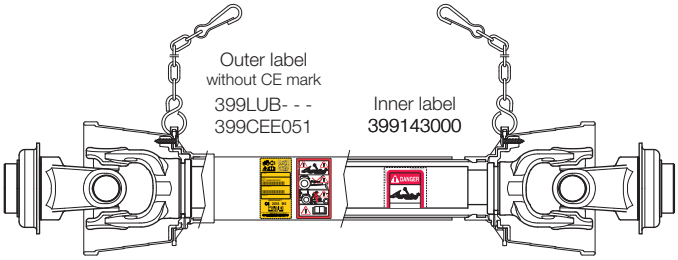

Outer labels

The outer label displays basic safety information for using the driveline, presented according to the rules existing in the country of destination.
In Europe, the Machinery Directive requires that information shown on the outer label must be understood in the language of the country of destination, which in practice means all EEC languages. For this reason, label no. 399CEE051 provides information by means of illustrations. This label is used for all CE marked drivelines, as well as other countries.

Outer label
399CEE051

In North America (United States, Canada, Mexico) standards ASABE AD11684 and ANSI Z535 detail the requirements for labels. Drivelines for sale into North America are provided with the outer label no. 399141000.

Drivelines bound for Japan are provided with the outer label no. 399JAP001.

Outer label
399141000

Outer label
399JAP001

The outer label no. 399LUB--- displays the following information:
- Tractor side;
- A QR code, that allows to access to the opearator’s manuals on internet by a mobile device, containing explanations on the labels, information on safe and correct driveline use, and instructions for proper maintenance;
- Batch of prodaction;
- Driveshaft code;
- Customer reference;
- Type of implement;
- CE mark when needed, year of production and driveshaft size;
- The mark and adress of the manufacturer.

Outer label

Safety labels and operator’s manuals

Inner label

This safety label draws the operators’ attention to the fact that the protective guard is missing and therefore the driveline is hazardous to operate. This is shown by the pictorial of a person entangled by a rotating shaft.

In addition, the signal word “DANGER” is used, which is understood throughout the world.

Inner label no. 399143000 is applied on the outer profile tube, under the protective guard, and provided on drivelines for all countries.

Outer label
399143000

Operator’s manual

The operator’s manual 399UNI001 is provided with all drivelines and contains explanations on the labels, information on safe and correct driveline use, and instructions for proper maintenance.

Machinery Directive 2006/42/CE specifies that drivelines between self-powered vehicles (or tractors) and implements, marketed in EU and EFTA countries, should be CE marked.

The manual 399UNI001 includes a Declaration of Compliance with Machinery Directive 2006/42/CE.

Operator’s manual
399UNI001

Complete shield kit

Complete shield kits for spare parts are sized to fit the drivelines on which they will be used. The code for the shield kit length is the same code used for the driveline length.

Shield tubes can be cut to fit a specific driveline length, but the shield tubes should maintain sufficient overlap for all operating and transport conditions.

Safety labels and operator's manuals are included according to the standards and regulations of the country of destination. Shield kit are supplied with chains, except for North America, where shields restraints are optional.

Drivelines and shields are tested to comply with EN 1152, EN ISO 5674, EN 12965 standards and are CE certified.
Complete shields are supplied as spare parts and therefore, in compliance with Machinery Directive, do not require CE marking. However, shield kits may be CE marked on request.

Regulations EN 1553 and ASAE S318,15 prescribe a 50 mm overlap of the driveline shield with the implement input connection shields.

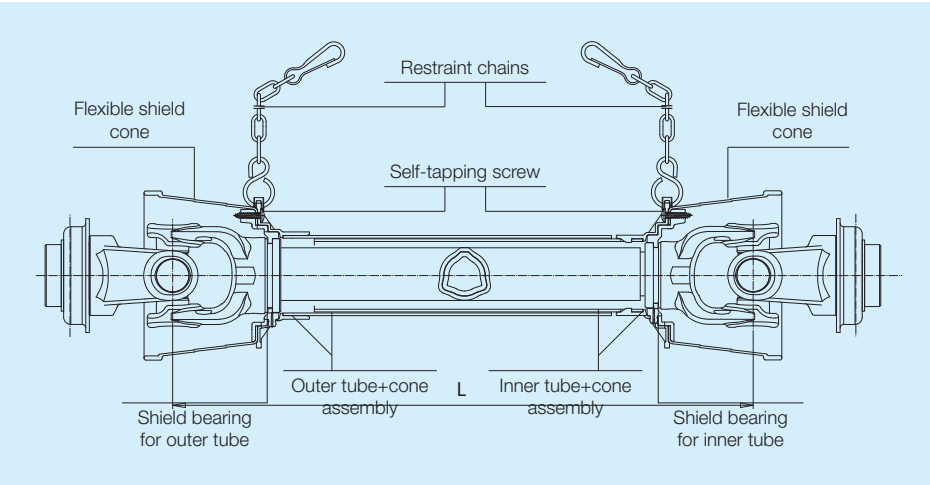

Safety shields

Shield cones configurations

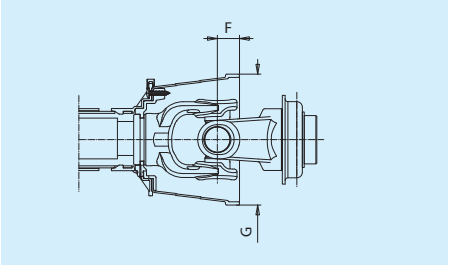

Standard shield cones for yokes and FFL friction clutches.

	F mm	G mm
1	23	132
2	20	132
4	24	140
5	33	165
6	26	165

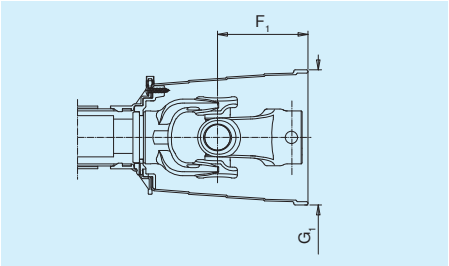

Extended cones.
To select this cone, available for implement side, add the letter "**N**" at the end of driveline's code

	F_1 mm	G_1 mm
1	92	141
2	89	141
4	96	143
5	116	176
6	109	176

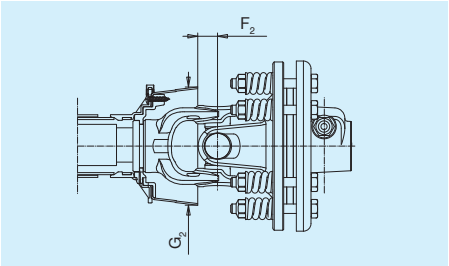

Shield cones for FFF friction clutches.
Driveline with FFF clutches are not CE marked since the shield cone does not entirely cover the inboard yoke, as specified by machinery Directive 98/37/CEE.

	F_2 mm	G_2 mm
4	19	125
5	18	145
6	25	145

BONDIOLI & PAVESI 邦贝 杭州

Code for complete shield kit as spare part

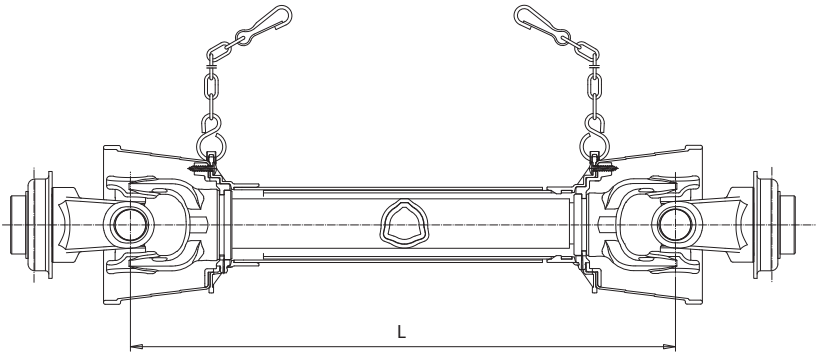

1	2
B	**C**

3	4
5	**F**

5F : Standard driveline

5	6
0	

Size
1 - 2 - 4 - 5 - 6

7	8	9

Length
041 - 046 - 051 - 056 - 061 - 066 - 071 - 076 - 081 - 086 - 091 - 101 - 111 - 121
See page 10 “Driveline length“.

10	11

Shield cone	Driver end	Driven end
Standard shield cone:	**F**	**F**
Extended shield cone:	**- -**	**N**
Shield cone for FFF friction clutches	**S**	**S**

12	13

Safety labels and instruction manuals and restraint chains
CE - Drivelines with CE mark.
CU - Drivelines with CE and both CE and US labels.
US - Drivelines for North America (USA, Canada, Mexico), without restrain chains.
UC - Drivelines for North America (USA, Canada, Mexico), with restrain chains.
JP - Drivelines for Japan.
FX - Drivelines for other countries or CEE-EFTA countries not bearing CE mark.

All rotating parts must be guarded. The shields on the tractor and on the implement work with the integral driveline guard to form an interactive guarding system.

Safety shields

Spare Parts

Shield bearing for outer tube

	E mm	D mm	Spare part code
1	40,4	103,0	25501CA01R02
2	47,4	103,0	25502CA01R02
4	53,4	109,3	25504CA01R02
5	62,4	124,0	25505CA01R02
6	68,4	124,0	25506CA01R02

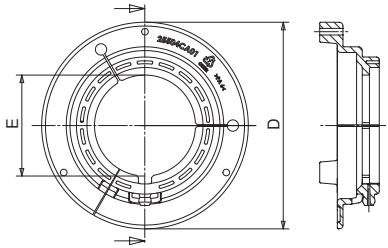

Shield bearing for inner tube

	E mm	D mm	Spare part code
1	34,4	103,0	25501CA02R02
2	40,4	103,0	25502CA02R02
4	46,4	109,3	25504CA02R02
5	53,4	124,0	25505CA02R02
6	59,4	124,0	25506CA02R02

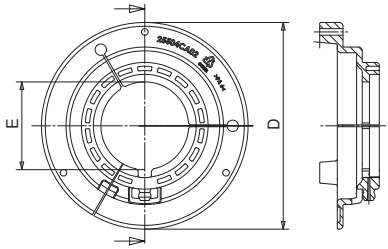

The spare part number of the multi-packs ends with a letter “R” and two digits that show the number of units per package.

Do not use on tractor's end
in CE and USA drivelines.

Push pin yokes

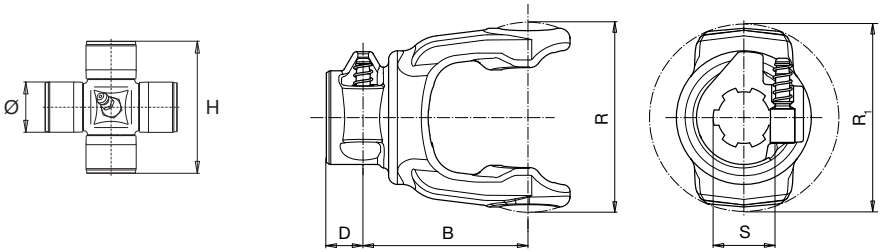

	Ø mm	H mm	S	D mm	B mm	R_1 mm	R mm	End Code	Spare part Code	
1	22,0	54,0	- -	- -	- -	- -	- -	**- -**	- -	- -
2	23,8	61,3	1 3/8" Z6	21	78	86	76	**007**	507020364A	403000001R10
4	27,0	74,6	1 3/8" Z6	21	85	86	89	**007**	507040363A	403000001R10
5	30,2	79,4	1 3/8" Z6	21	89	86	98	**007**	507050363A	403000001R10
6	30,2	91,4	1 3/8" Z6	21	94	86	108	**007**	507060356A	403000001R10

Yokes

RT Ball collar yokes

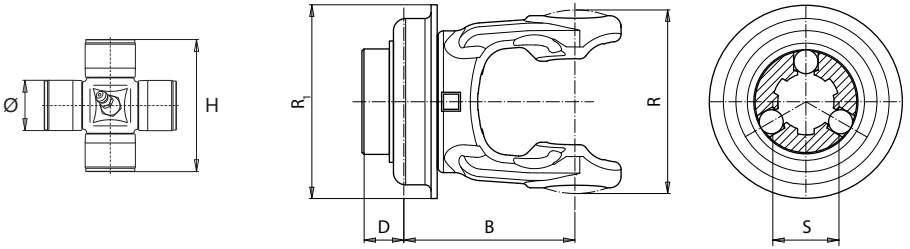

	Ø mm	H mm	S	D mm	B mm	R_1 mm	R mm	End Code	Spare part Code	Ball collar Code
1	22,0	54,0	1 3/8” Z6	18	75	95	68	**R07**	5720B0380A	435000316R
2	23,8	61,3	1 3/8” Z6	21	78	95	76	**R07**	5720C0380A	435000316R
			D8x32x38	21	78	110	76	**R93**	5720C2152A	435002121R
4	27,0	74,6	1 3/8” Z6	21	85	95	89	**R07**	5720E0379A	435000316R
			D8x32x38	21	85	110	89	**R93**	5720E2152A	435002121R
5	30,2	79,4	1 3/8” Z6	21	91	110	98	**R07**	5720G0381A	435000315R
			D8x32x38	21	91	110	98	**R93**	5720G2152A	435002121R
6	30,2	91,4	1 3/8” Z6	21	98	110	108	**R07**	5720H0379A	435000315R
			D8x32x38	21	98	110	108	**R93**	5720H2152A	435002121R
			1 3/4” Z6	31	100	135	108	**R09**	5720H0479A	435000415R
			1 3/4” Z20	31	100	135	108	**R10**	5720H3879A	435000415R
			D8x42x48	24	95	135	108	**R92**	5720H9951A	435000003R

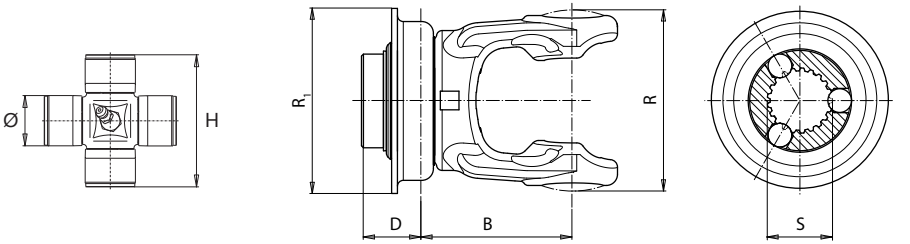

	Ø mm	H mm	S	D mm	B mm	R_1 mm	R mm	End Code	Spare part Code	Ball collar Code
1	22,0	54,0	1 3/8” Z21	28	65	95	68	**R08**	5720B3780A	435000300R
2	23,8	61,3	1 3/8” Z21	31	68	95	76	**R08**	5720C3780A	435000300R
4	27,0	74,6	1 3/8” Z21	31	75	95	89	**R08**	5720E3779A	435000300R
5	30,2	79,4	1 3/8” Z21	31	81	110	98	**R08**	5720G3781A	435000302R
6	30,2	91,4	1 3/8” Z21	31	88	110	108	**R08**	5720H3779A	435000302R

Spring pin hole yokes

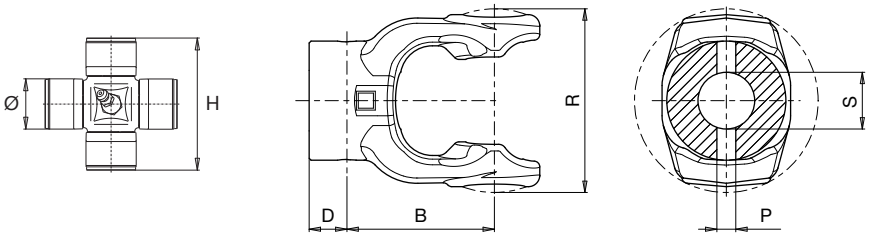

	Ø mm	H mm	S H8 mm	P H12 mm	D mm	B mm	R mm	End Code	Spare part Code
4	27,0	74,6	30	10	20	70	94	**072**	2110E4853A
5	30,2	79,4	30	10	20	78	96	**072**	211054852A
			35	13	20	78	96	**073**	211054957A
6	30,2	91,4	35	13	20	85	108	**070**	211064951A

Round bore cutter yokes

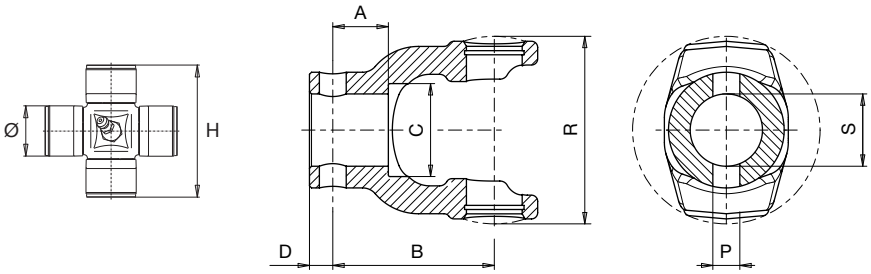

	Ø mm	H mm	S H8 mm	P H12 mm	D mm	B mm	R mm	A mm	C mm	End Code	Spare part Code
4	27,0	74,6	35	13	11	70	94	26,9	45	**073**	211044964A
5	30,2	79,4	35	13	16,2	81,3	96	27,8	43	**A73**	211054958A

Yokes

Round bore cutter yokes and grease fitting

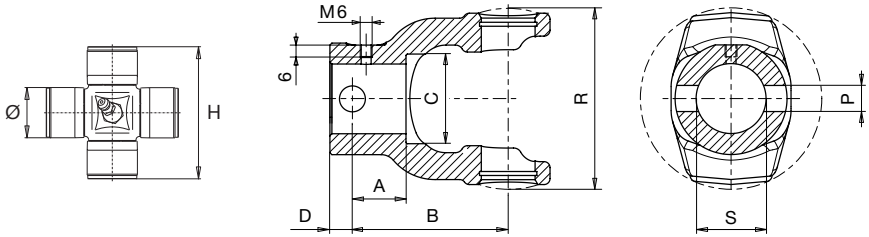

	Ø	H	S^{H8}	P^{H12}	D	B	R	A	C	End Code	Spare part Code
	mm	mm	mm	mm	mm	mm	mm	mm	mm		
4	27,0	74,6	35	13	11,3	78,2	94	26,9	45	**A74**	211044965A

BONDIOLI & PAVESI 邦贝 杭州

Outer tube yokes

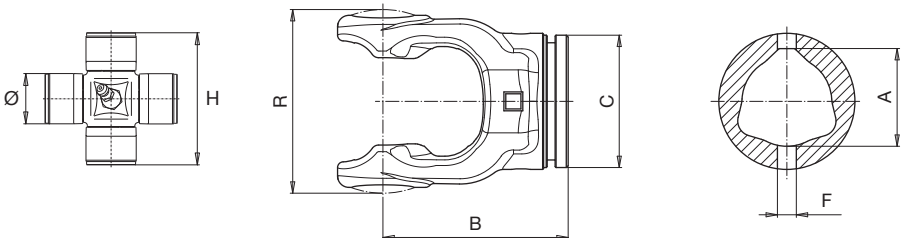

	Ø mm	H mm	R mm	B mm	C mm	F mm	A mm	Spare part Code	Spring pin Code
1	22,0	54,0	69	78	47	8	32,5	204016888A	341036000R10
2	23,8	61,3	76	82	54	8	36,0	204026888A	341048000R10
4	27,0	74,6	91	90	61	8	43,5	204046890A	341038000R10
5	30,2	79,4	98	98	70	10	51,6	204056888A	341053000R10
6	30,2	91,4	108	105	76	10	54,0	204066888A	341042000R10

Inner tube yokes

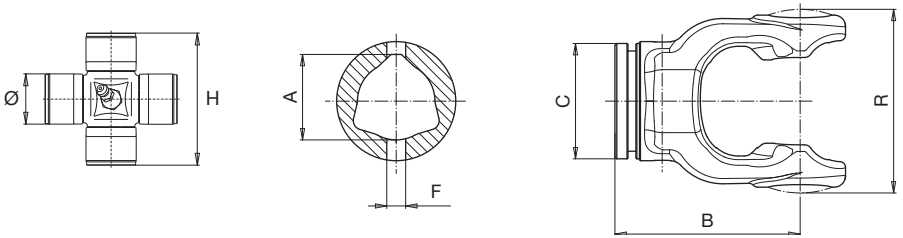

	Ø mm	H mm	A mm	F mm	C mm	B mm	R mm	Spare part Code	Spring pin Code
1	22,0	54,0	26,5	8	41	78	69	204016889A	341037000R10
2	23,8	61,3	29,0	8	47	82	76	204026889A	341036000R10
4	27,0	74,6	36,0	8	54	90	91	204046891A	341048000R10
5	30,2	79,4	45,0	10	61	98	98	204056889A	341002000R10
6	30,2	91,4	45,0	10	67	105	108	204066889A	341043000R10

The spare part number of the multi-packs ends with a letter “R” and two digits that show the number of units per package.

Overrunning clutches

RA1

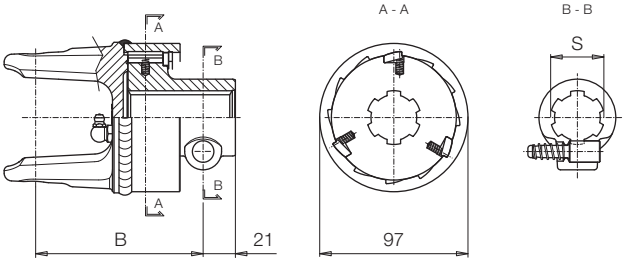

Size	B (mm)				
	S = 1 3/8” Z6	1 3/8” Z21	1 3/4” Z6	1 3/4” Z20	D8x32x38
2	100	100	- -	- -	100
4	109	109	- -	- -	109
5	112	112	- -	- -	112
6	119	119	- -	- -	119

RA1 Driveline codes

Max torque 2400 Nm	S = 1 3/8” Z6	1 3/8” Z21	1 3/4” Z6	1 3/4” Z20	D8x32x38
	096	**631**	**- -**	**- -**	**A41**

RA1 Spare part codes

Size	S = 1 3/8” Z6	1 3/8” Z21	1 3/4” Z6	1 3/4” Z20	D8x32x38
2	BC601102701R	BC601102702R	- -	- -	BC601102705R
4	BC601104701R	BC601104702R	- -	- -	BC601104706R
5	BC601105704R	BC601105702R	- -	- -	BC601105706R
6	BC601106704R	BC601106702R	- -	- -	BC601106709R

To avoid excessive wear to the implement, driveline, or tractor, Bondioli & Pavesi recommends that the defined setting not to be altered.

All rotating parts must be guarded. The shields on the tractor and on the implement work with the integral driveline guard to form an interactive guarding system.

RA1

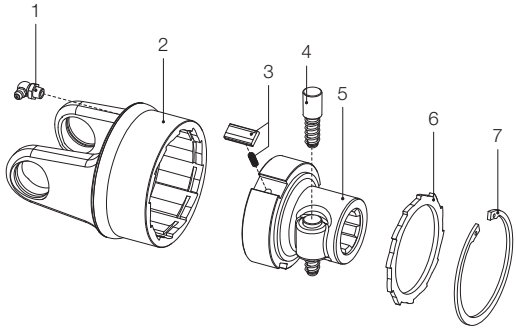

Ref.	Size	Spare part code	Description	Technical notes
1		348014000R20	Grease fitting	
2	**2** **4** **5** **6**	418021201R 418041203R 418051201R 418061201R	Outer housing + yoke	
3		4210C0001R03	Pawl + springs kit	
4		403000022R10	Push pin	
5		5130C0302R 5130C3702R 5130C2102R	Hub with push pin	1 3/8” Z6 1 3/8” Z21 D8x32x38
6		246000132R02	Looking plate	
7		338005000R20	Snap ring	82 x 2,5 DIN 472/1

The spare part number of the multi-packs ends with a letter “R” and two digits that show the number of units per package.

Overrunning clutches

RA2

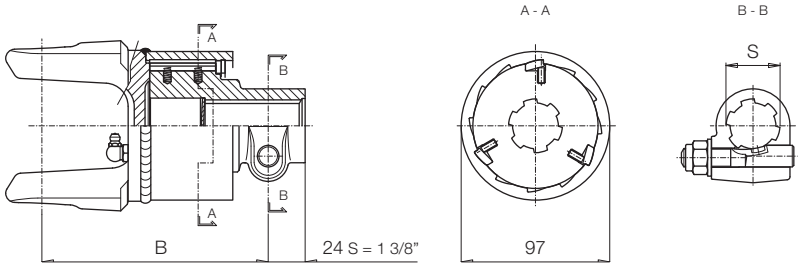

Size	B (mm)			
	S = 1 3/8” Z6	1 3/8” Z21	1 3/4” Z6	1 3/4” Z20
6	147	147	- -	- -

RA2 Driveline codes

Max torque 3800 Nm	S = 1 3/8” Z6	1 3/8” Z21	1 3/4” Z6	1 3/4” Z20
	A50	**A51**	**- -**	**- -**

RA2 Spare part codes

Size	S = 1 3/8” Z6	1 3/8” Z21	1 3/4” Z6	1 3/4” Z20
6	BC601206601R	BC601206602R	- -	- -

To avoid excessive wear to the implement, driveline, or tractor, Bondioli & Pavesi recommends that the defined setting not to be altered.

All rotating parts must be guarded. The shields on the tractor and on the implement work with the integral driveline guard to form an interactive guarding system.

RA2

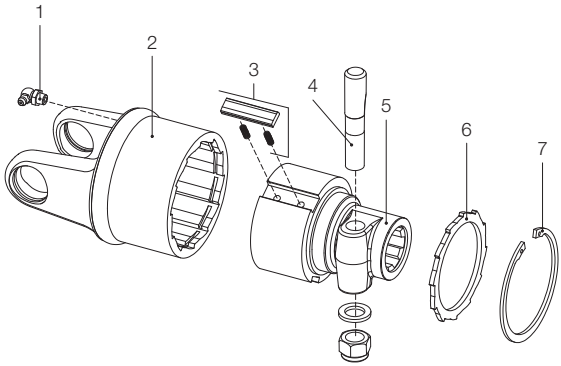

Ref.	Size	Spare part code	Description	Technical notes
1		348014000R20	Grease fitting	
2	**6**	418062203R	Outer housing + yoke	
3		4210E0001R03	Pawl + springs kit	
4		408000047R02	Taper pin	1 3/8” Z6 - Z21
5		5150E0301R 5150E3701R	Hub with taper pin	1 3/8” Z6 1 3/8” Z21
6		246000132R02	Looking plate	
7		338005000R20	Snap ring	82 x 2,5 DIN 472/1

The spare part number of the multi-packs ends with a letter “R” and two digits that show the number of units per package.

Shear bolt torque limiters

LB

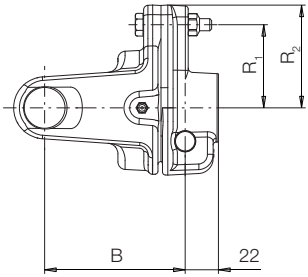

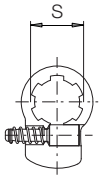

LB Driveline codes

Size	Setting Nm	S = 1 3/8" Z6	1 3/8" Z21	1 3/4" Z6	1 3/4" Z20	D8x32x38	B mm	R_1 mm	R_2 mm
2	950	**098**	**161**	- -	- -	- -	87	55	68
4	1400	**1R0**	**1S0**	- -	- -	- -	93	45	68
	1700	**098**	**161**	- -	- -	- -	93	55	68
	2000	**1R2**	**1S2**	- -	- -	- -	93	43	68
5	2100	**1R0**	**1S0**	- -	- -	- -	106	67	80
	2400	**1R1**	**1S1**	- -	- -	**1Q6**	106	50	80
6	2400	**1R0**	**1S0**	- -	- -	**1Q5**	112	50	80
	2700	**098**	**161**	- -	- -	**1Q4**	112	55	80

LB Spare part codes

Size	Setting Nm	S = 1 3/8" Z6	1 3/8" Z21	1 3/4" Z6	1 3/4" Z20	D8x32x38	Bolt dimensions
2	950	BC6060C0302R	BC6060C3702R	- -	- -	- -	M6 x 40 cl.8.8
4	1400	BC6060E0303R	BC6060E3704R	- -	- -	- -	M8 x 45 cl.8.8
	1700	BC6060E0302R	BC6060E3702R	- -	- -	- -	M8 x 45 cl.8.8
	2000	BC6060E0309R	BC6060E3711R	- -	- -	- -	M10 x 50 cl.8.8
5	2100	BC6060G0322R	BC6060G3712R	- -	- -	- -	M8 x 50 cl.8.8
	2400	BC6060G0314R	BC6060G3713R	- -	- -	BC6060G2105R	M10 x 50 cl.8.8
6	2400	BC6060H0312R	BC6060H3710R	- -	- -	BC6060H2101R	M10 x 50 cl.8.8
	2700	BC6060H0315R	BC6060H3711R	- -	- -	BC6060H2102R	M10 x 50 cl.8.8

To avoid excessive wear to the implement, driveline, or tractor, Bondioli & Pavesi recommends that the defined setting not to be altered.

All rotating parts must be guarded. The shields on the tractor and on the implement work with the integral driveline guard to form an interactive guarding system.

BONDIOLI & PAVESI 邦贝 杭州

LB

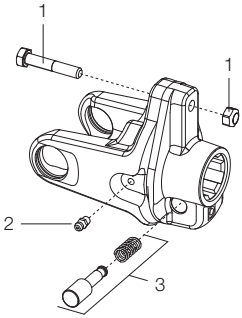

Ref.	Size	Spare part code	Description	Technical notes
1		432000002R05 432000047R05 432000003R05 432000053R05	Bolt	M6 x 40 mm cl 8.8 M8 x 45 mm cl 8.8 M8 x 50 mm cl 8.8 M10 x 50 mm cl 8.8
2		348017000R20	Grease fitting	
3		403000022R10	Push pin kit	

The spare part number of the multi-packs ends with a letter “R” and two digits that show the number of units per package.

Friction torque limiters FFL

FFL22A

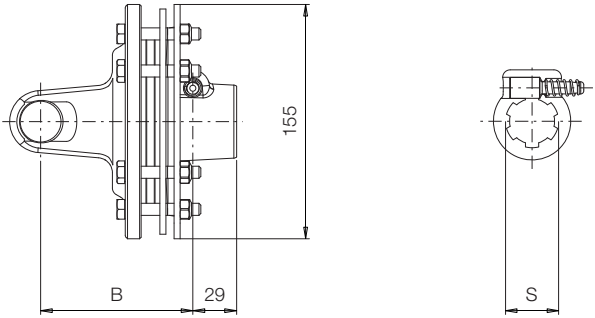

Size	Setting Nm	B (mm) S = 1 3/8” Z6	1 3/8” Z21	1 3/4” Z6	1 3/4” Z20
4	450	101	101	- -	- -
	600	101	101	- -	- -
	800	101	101	- -	- -

FFL22A Driveline codes

Setting Nm	S = 1 3/8” Z6	1 3/8” Z21	1 3/4” Z6	1 3/4” Z20
450	**2L0**	**2L5**	**- -**	**- -**
600	**2L2**	**2L7**	**- -**	**- -**
800	**2L3**	**2L8**	**- -**	**- -**

FFL22A Spare part codes

Size	Setting Nm	S = 1 3/8” Z6	1 3/8” Z21	1 3/4” Z6	1 3/4” Z20
4	450	BC669E26103R	BC669E26137R	- -	- -
	600	BC669E32103R	BC669E32137R	- -	- -
	800	BC669E39103R	BC669E39137R	- -	- -

To avoid excessive wear to the implement, driveline, or tractor, Bondioli & Pavesi recommends that the defined setting not to be altered.

All rotating parts must be guarded. The shields on the tractor and on the implement work with the integral driveline guard to form an interactive guarding system.

FFL22A

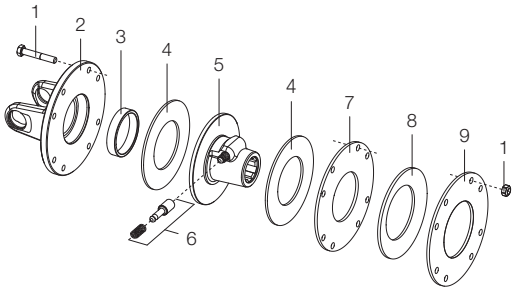

Ref.	Size	Spare part code	Description	Technical notes
1		432000003R08	Bolt	M8 x 50 mm cl 8.8
2	4	2530E1A05R	Flange yoke	
3		258005320R02	Bushing	
4		247006151R08	Friction lining	D = 124 ; d = 67 mm
5		513850306R 513853706R	Hub with push pin	1 3/8” Z6 1 3/8” Z21
6		403000022R10	Push pin kit	1 3/8” Z6 - Z21
7		2481A0007R02	Inner disc	Sp = 4 mm
8		367001151R	Belleville spring	
9		2481A0008R02	Pressure disc	Sp = 4 mm

The spare part number of the multi-packs ends with a letter “R” and two digits that show the number of units per package.

Friction clutches may become hot.
Do not touch!
Keep the area around the friction clutch clear of any material that could catch fire, and avoid prolonged slipping that will generate excess heat and wear

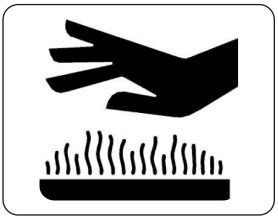

Friction torque limiters FFL

FFL32A

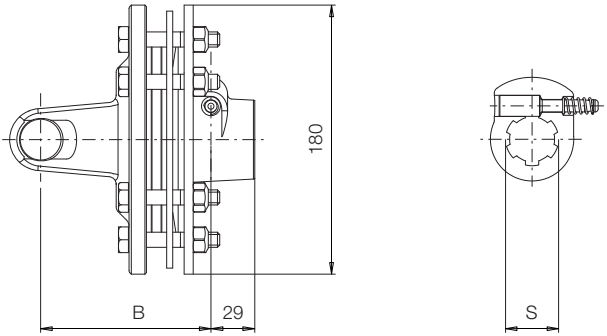

Size	Setting Nm	B (mm) S = 1 3/8” Z6	1 3/8” Z21	1 3/4” Z6	1 3/4” Z20	D8x32x38
4	900	113	113	- -	- -	113
	1050	113	113	- -	- -	113
5	900	117	117	- -	- -	- -
	1100	117	117	- -	- -	- -
6	900	125	125	- -	- -	- -
	1100	125	125	- -	- -	- -

FFL32A Driveline codes

Setting Nm	S = 1 3/8” Z6	1 3/8” Z21	1 3/4” Z6	1 3/4” Z20	D8x32x38
900	**2M0**	**2M5**	**- -**	**- -**	**2Y1**
1050	**2M1**	**2M6**	**- -**	**- -**	**2Y2**
1100	**2M2**	**2M7**	**- -**	**- -**	**- -**

FFL32A Spare part codes

Size	Setting Nm	S = 1 3/8” Z6	1 3/8” Z21	1 3/4” Z6	1 3/4” Z20	D8x32x38
4	900	BC669E41203R	BC669E41237R	- -	- -	BC669E41221R
	1050	BC669E45203R	BC669E45237R	- -	- -	BC669E45221R
5	900	BC669G41203R	BC669G41237R	- -	- -	- -
	1100	BC669G46203R	BC669G46237R	- -	- -	- -
6	900	BC669H41203R	BC669H41237R	- -	- -	- -
	1100	BC669H46203R	BC669H46237R	- -	- -	- -

To avoid excessive wear to the implement, driveline, or tractor, Bondioli & Pavesi recommends that the defined setting not to be altered.

All rotating parts must be guarded. The shields on the tractor and on the implement work with the integral driveline guard to form an interactive guarding system.

FFL32A

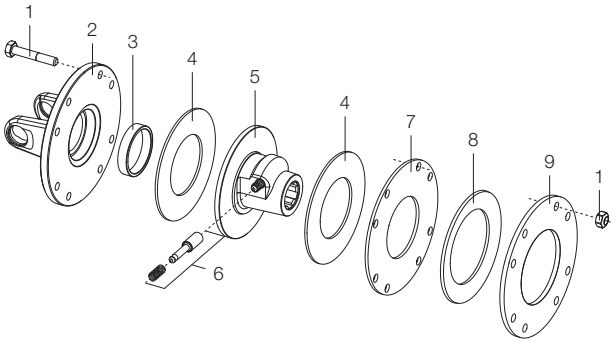

Ref.	Size	Spare part code	Description	Technical notes
1		432000008R08	Bolt	M10 x 60 mm cl 8.8
2	**4** **5** **6**	2530E1C05R 2530G1C05R 2530H1C05R	Flange yoke	
3		258005320R02	Bushing	
4		247006251R08	Friction lining	D = 141 ; d = 77 mm
5		513860302R 513863701R 513862101R	Hub with push pin	1 3/8” Z6 1 3/8” Z21 D8x32x38
6		403000002R10	Push pin kit	1 3/8” Z6 - Z21 D8x32x38
7		2481C0007R02	Inner disc	Sp = 4 mm
8		367002200R	Belleville spring	
9		248200001R02	Pressure disc	Sp = 6 mm

Friction clutches may become hot.
Do not touch!
Keep the area around the friction clutch clear of any material that could catch fire, and avoid prolonged slipping that will generate excess heat and wear

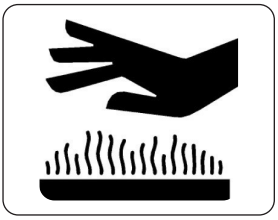

Friction torque limiters FFL

FFL42A

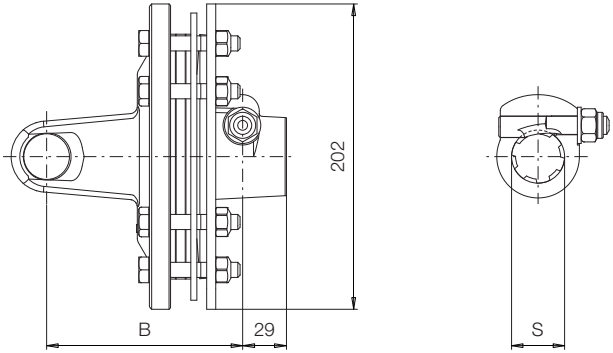

Size	Setting Nm	B (mm) S = 1 3/8” Z6	1 3/8” Z21	1 3/4” Z6	1 3/4” Z20
6	1200	130	- -	- -	130
	1350	- -	- -	- -	130
	1450	130	130	130	130

FFL42A Driveline codes

Setting Nm	S = 1 3/8” Z6	1 3/8” Z21	1 3/4” Z6	1 3/4” Z20
1200	**3A0**	**- -**	**- -**	**3B5**
1350	**- -**	**- -**	**- -**	**3B6**
1450	**3A2**	**3A8**	**3B2**	**3B7**

FFL42A Spare part codes

Size	Setting Nm	S = 1 3/8” Z6	1 3/8” Z21	1 3/4” Z6	1 3/4” Z20
6	1200	BC669H48403R	- -	- -	BC669H48438R
	1350	- -	- -	- -	BC669H51438R
	1450	BC669H53403R	BC669H53437R	BC669H53404R	BC669H53438R

To avoid excessive wear to the implement, driveline, or tractor, Bondioli & Pavesi recommends that the defined setting not to be altered.

All rotating parts must be guarded. The shields on the tractor and on the implement work with the integral driveline guard to form an interactive guarding system.

FFL42A

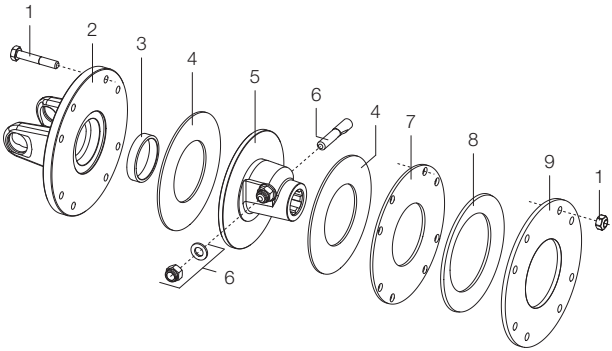

Ref.	Size	Spare part code	Description	Technical notes
1		432000008R08	Bolt	M10 x 60 mm cl 8.8
2	**6**	2530H1E05R	Flange yoke	
3		258005320R02	Bushing	
4		247006351R08	Friction lining	D = 162 ; d = 85 mm
5		515870304R 515873704R 515870404R 515873804R	Hub with taper pin	1 3/8” Z6 1 3/8” Z21 1 3/4” Z6 1 3/4” Z20
6		408000047R02 408000046R02	Taper pin kit	1 3/8” Z6 - Z21 1 3/4” Z6 - Z20
7		2481E0007R02	Inner disc	Sp = 4 mm
8		367002210R	Belleville spring	
9		248210002R02	Pressure disc	Sp = 6 mm

Friction clutches may become hot.
Do not touch!
Keep the area around the friction clutch clear of any material that could catch fire, and avoid prolonged slipping that will generate excess heat and wear

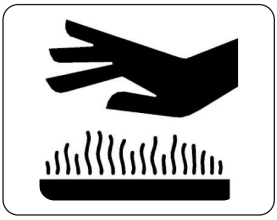

Friction torque limiters FFL

FFL34A

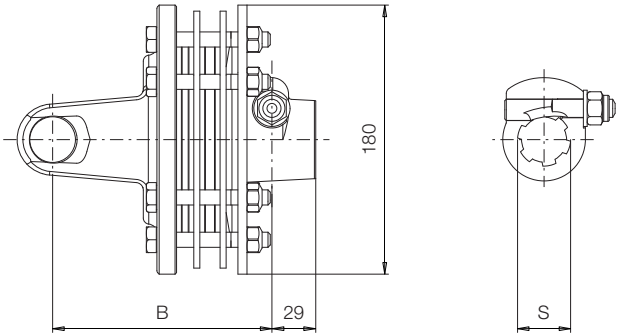

Size	Setting	B (mm)			
	Nm	S = 1 3/8” Z6	1 3/8” Z21	1 3/4” Z6	1 3/4” Z20
6	1450	145	145	145	145

FFL34A Driveline codes

Setting				
Nm	S = 1 3/8” Z6	1 3/8” Z21	1 3/4” Z6	1 3/4” Z20
1450	**2N2**	**2N9**	**2P6**	**2Q3**

FFL34A Spare part codes

Size	Setting				
	Nm	S = 1 3/8” Z6	1 3/8” Z21	1 3/4” Z6	1 3/4” Z20
6	1450	BC669H53303R	BC669H53337R	BC669H53304R	BC669H53338R

To avoid excessive wear to the implement, driveline, or tractor, Bondioli & Pavesi recommends that the defined setting not to be altered.

All rotating parts must be guarded. The shields on the tractor and on the implement work with the integral driveline guard to form an interactive guarding system.

FFL34A

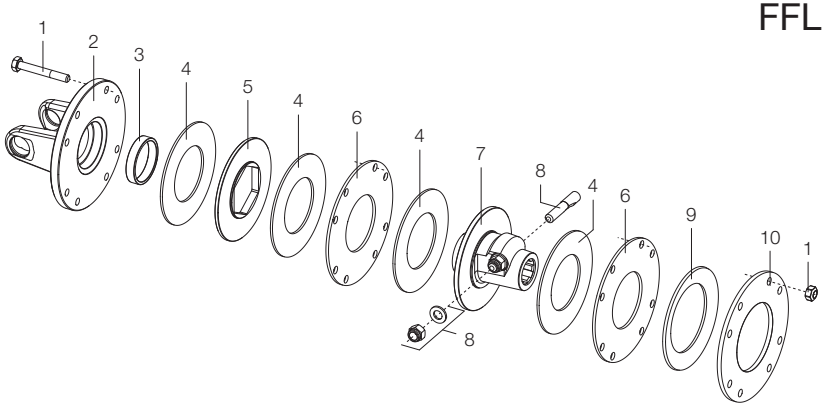

Ref.	Size	Spare part code	Description	Technical notes
1		432000134R08	Bolt	M10 x 75 mm cl 10.9
2	**6**	2530H1C05R	Flange yoke	
3		258005320R02	Bushing	
4		247006251R08	Friction lining	D = 141 ; d = 77 mm
5		248727701R	Driving disc	
6		2481C0007R02	Inner disc	Sp = 4 mm
7		515890304R 515893704R 515890404R 515893804R	Hub with taper pin	1 3/8” Z6 1 3/8” Z21 1 3/4” Z6 1 3/4” Z20
8		408000047R02 408000049R02	Taper pin kit	1 3/8” Z6 - Z21 1 3/4” Z6 - Z20
9		367002200R	Belleville spring	
10		248200001R02	Pressure disc	Sp = 6 mm

The spare part number of the multi-packs ends with a letter “R” and two digits that show the number of units per package.

Friction clutches may become hot.
Do not touch!
Keep the area around the friction clutch clear of any material that could catch fire, and avoid prolonged slipping that will generate excess heat and wear

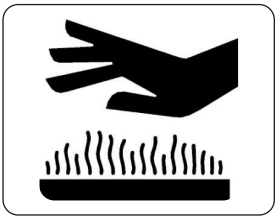

Friction torque limiters FFF

FFF22A

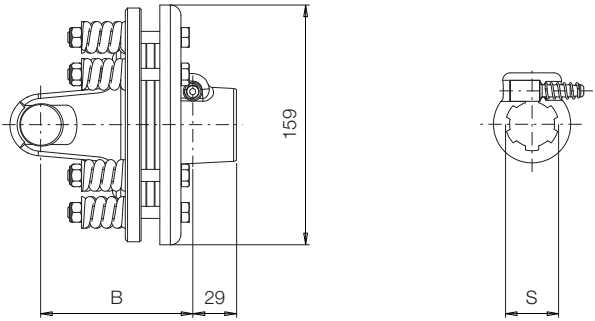

Size	Setting Nm	B (mm) S = 1 3/8” Z6	1 3/8” Z21	1 3/4” Z6	1 3/4” Z20
4	600	101	101	- -	- -
	800	101	101	- -	- -

FFF22A Driveline codes

Setting Nm	S = 1 3/8” Z6	1 3/8” Z21	1 3/4” Z6	1 3/4” Z20
600	**3G0**	**3G5**	**- -**	**- -**
800	**3G1**	**3G6**	**- -**	**- -**

FFF22A Spare part codes

Size	Setting Nm	S = 1 3/8” Z6	1 3/8” Z21	1 3/4” Z6	1 3/4” Z20
4	600	BC670E32A03R	BC670E32A37R	- -	- -
	800	BC670E39A03R	BC670E39A37R	- -	- -

To avoid excessive wear to the implement, driveline, or tractor, Bondioli & Pavesi recommends that the defined setting not to be altered.

All rotating parts must be guarded. The shields on the tractor and on the implement work with the integral driveline guard to form an interactive guarding system.

FFF22A

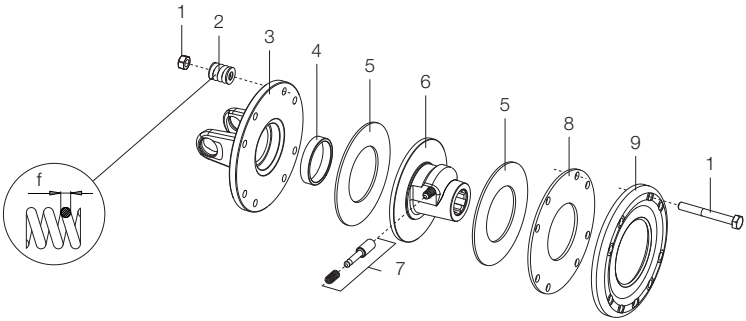

Ref.	Size	Spare part code	Description	Technical notes
1		432000031R08	Bolt	M10 x 75 mm cl 8.8
2		351015001R08	Coil spring	f = 6 mm
3	**4**	2530E1A05R	Flange yoke	
4		258005320R02	Bushing	
5		247006151R08	Friction lining	D = 124 ; d = 67 mm
6		513850306R 513853706R	Hub with push pin	1 3/8” Z6 1 3/8” Z21
7		403000022R10	Push pin kit	1 3/8” Z6 - Z21
8		2481A0007R02	Inner disc	Sp = 4 mm
9		2481A0006R02	Pressure plate	

The spare part number of the multi-packs ends with a letter “R” and two digits that show the number of units per package.

Friction clutches may become hot.
Do not touch!
Keep the area around the friction clutch clear of any material that could catch fire, and avoid prolonged slipping that will generate excess heat and wear

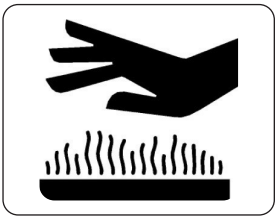

Friction torque limiters FFF

FFF32A
with push pin

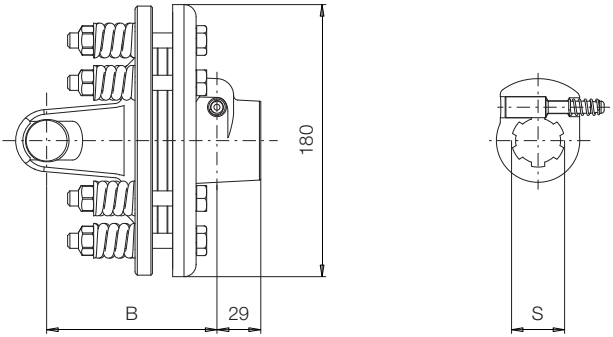

Size	Setting Nm	B (mm) S = 1 3/8” Z6	1 3/8” Z21	1 3/4” Z6	1 3/4” Z20
4	900	113	113	- -	- -
5	1100	117	117	- -	- -
6	1100	125	125	- -	- -

FFF32A Driveline codes

Setting Nm	S = 1 3/8” Z6	1 3/8” Z21	1 3/4” Z6	1 3/4” Z20
900	**3F0**	**3F5**	**- -**	**- -**
1100	**3F2**	**3F7**	**- -**	**- -**

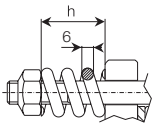

FFF32A Spare part codes

Size	Setting Nm	S = 1 3/8” Z6	1 3/8” Z21	1 3/4” Z6	1 3/4” Z20	h mm
4	900	BC670E41C03R	BC670E41C37R	- -	- -	28.8
5	1100	BC670G46C03R	BC670G46C37R	- -	- -	28.2
6	1100	BC670H46C03R	BC670H46C37R	- -	- -	28.2

To avoid excessive wear to the implement, driveline, or tractor, Bondioli & Pavesi recommends that the defined setting not to be altered.

All rotating parts must be guarded. The shields on the tractor and on the implement work with the integral driveline guard to form an interactive guarding system.

FFF32A

with push pin

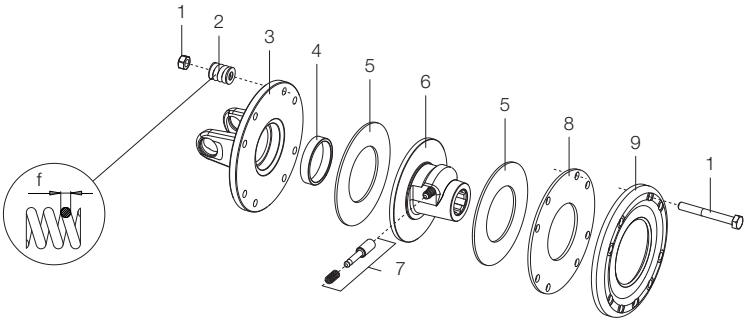

Ref.	Size	Spare part code	Description	Technical notes
1		432000006R08	Bolt	M10 x 85 mm cl 8.8
2		351022370R08	Coil springs	f = 6 mm
3	**4** **5** **6**	2530E1C05R 2530G1C05R 2530H1C05R	Flange yoke	
4		258005320R02	Bushing	
5		247006251R08	Friction lining	D = 141 ; d = 77 mm
6		513860302R 513863701R	Hub with push pin	1 3/8” Z6 1 3/8” Z21
7		403000002R10	Push pin kit	1 3/8” Z6 - Z21
8		2481C0007R02	Inner disc	Sp = 4 mm
9		248220007R02	Pressure plate	

The spare part number of the multi-packs ends with a letter “R” and two digits that show the number of units per package.

Friction clutches may become hot.
Do not touch!
Keep the area around the friction clutch clear of any material that could catch fire, and avoid prolonged slipping that will generate excess heat and wear

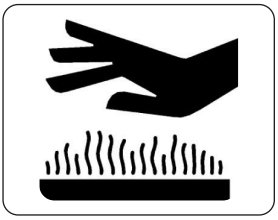

Friction torque limiters FFF

FFF32A
with taper pin

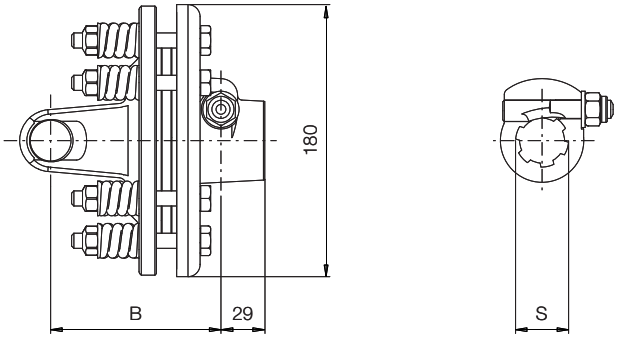

Size	Setting Nm	B (mm) S = 1 3/8” Z6	1 3/8” Z21	1 3/4” Z6	1 3/4” Z20
4	900	113	113	- -	- -
5	900	117	117	- -	- -
	1100	117	117	- -	- -
6	900	125	125	- -	- -
	1100	125	125	- -	- -

FFF32A Driveline codes

Setting Nm	S = 1 3/8” Z6	1 3/8” Z21	1 3/4” Z6	1 3/4” Z20
900	**2R0**	**2R5**	**- -**	**- -**
1100	**2R2**	**2R7**	**- -**	**- -**

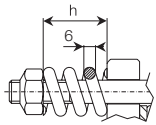

FFF32A Spare part codes

Size	Setting Nm	S = 1 3/8” Z6	1 3/8” Z21	1 3/4” Z6	1 3/4” Z20	h mm
4	900	BC670E41203R	BC670E41237R	- -	- -	28.8
5	900	BC670G41203R	BC670G41237R	- -	- -	28.8
	1100	BC670G46203R	BC670G46237R	- -	- -	28.2
6	900	BC670H41203R	BC670H41237R	- -	- -	28.8
	1100	BC670H46203R	BC670H46237R	- -	- -	28.2

To avoid excessive wear to the implement, driveline, or tractor, Bondioli & Pavesi recommends that the defined setting not to be altered.

All rotating parts must be guarded. The shields on the tractor and on the implement work with the integral driveline guard to form an interactive guarding system.

FFF32A

with taper pin

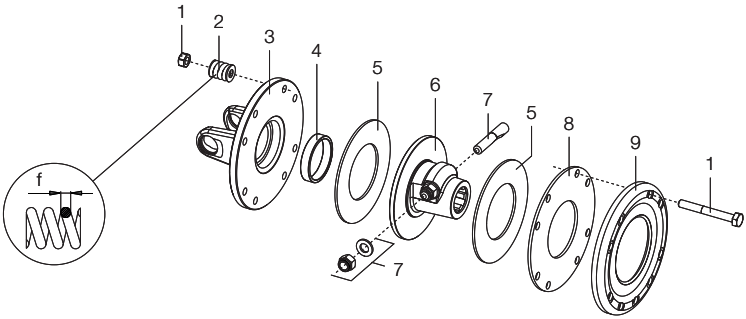

Ref.	Size	Spare part code	Description	Technical notes
1		432000006R08	Bolt	M10 x 85 mm cl 8.8
2		351022370R08	Coil springs	f = 6 mm
3	**4** **5** **6**	2530E1C05R 2530G1C05R 2530H1C05R	Flange yoke	
4		258005320R02	Bushing	
5		247006251R08	Friction lining	D = 141 ; d = 77 mm
6		515860304R 515863704R	Hub with push pin	1 3/8” Z6 1 3/8” Z21
7		408000047R02	Push pin kit	1 3/8” Z6 - Z21
8		2481C0007R02	Inner disc	Sp = 4 mm
9		248220007R02	Pressure plate	

The spare part number of the multi-packs ends with a letter “R” and two digits that show the number of units per package.

Friction clutches may become hot.
Do not touch!
Keep the area around the friction clutch clear of any material that could catch fire, and avoid prolonged slipping that will generate excess heat and wear

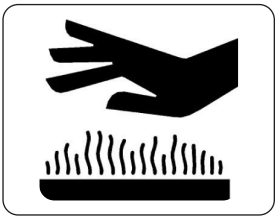

Friction torque limiters FFF

FFF42A

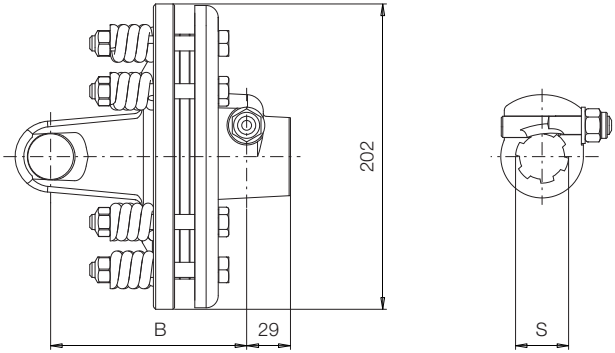

Size	Setting Nm	B (mm) S = 1 3/8” Z6	1 3/8” Z21	1 3/4” Z6	1 3/4” Z20
6	1200	130	130	130	130
	1350	130	130	130	130
	1450	130	130	130	130

FFF42A Driveline codes

Setting Nm	S = 1 3/8” Z6	1 3/8” Z21	1 3/4” Z6	1 3/4” Z20
1200	**2V8**	**2W4**	**2X0**	**2X6**
1350	**2V9**	**2W5**	**2X1**	**2X7**
1450	**2W0**	**2W6**	**2X2**	**2X8**

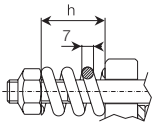

FFF42A Spare part codes

Size	Setting Nm	S = 1 3/8” Z6	1 3/8” Z21	1 3/4” Z6	1 3/4” Z20	h mm
6	1200	BC670H48403R	BC670H48437R	BC670H48404R	BC670H48438R	29.5
	1350	BC670H51403R	BC670H48437R	BC670H48404R	BC670H48438R	29.3
	1450	BC670H53403R	BC670H53437R	BC670H53404R	BC670H53438R	29.2

To avoid excessive wear to the implement, driveline, or tractor, Bondioli & Pavesi recommends that the defined setting not to be altered.

All rotating parts must be guarded. The shields on the tractor and on the implement work with the integral driveline guard to form an interactive guarding system.

FFF42A

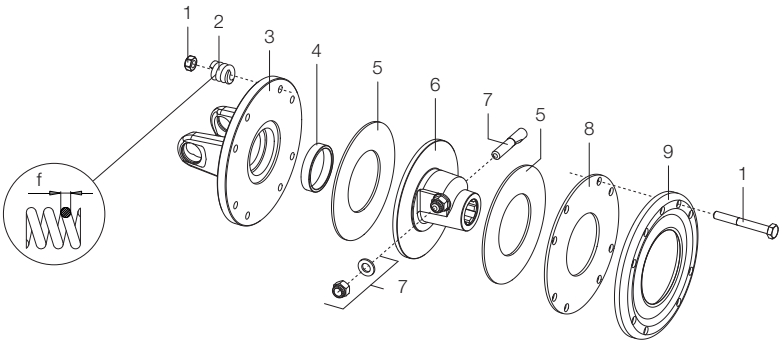

Ref.	Size	Spare part code	Description	Technical notes
1		432000006R08	Bolt	M10 x 85 mm cl 8.8
2		351013370R08	Coil springs	f = 7 mm
3	**6**	2530H1E05R	Flange yoke	
4		258005320R02	Bushing	
5		247006311R08	Friction lining	D = 162 ; d = 85 mm
6		515870304R 515873704R 515870404R 515873804R	Hub with taper pin	1 3/8” Z6 1 3/8” Z21 1 3/4” Z6 1 3/4” Z20
7		408000047R02 408000046R02	Taper pin kit	1 3/8” Z6 - Z21 1 3/4” Z6 - Z20
8		2481E0007R02	Inner disc	Sp = 4 mm
9		248230006R02	Pressure plate	

The spare part number of the multi-packs ends with a letter “R” and two digits that show the number of units per package.

Friction clutches may become hot.
Do not touch!
Keep the area around the friction clutch clear of any material that could catch fire, and avoid prolonged slipping that will generate excess heat and wear

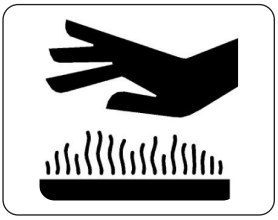

Friction torque limiters FFF

FFF34A

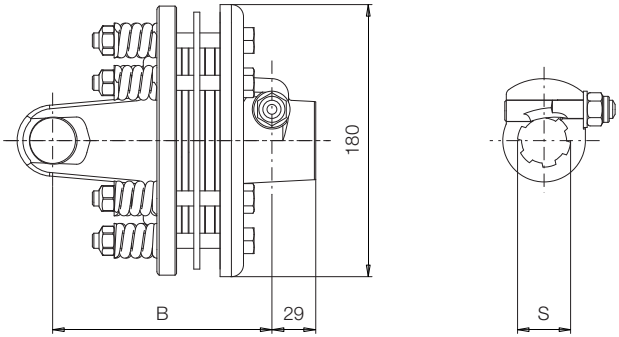

Size	Setting Nm	B (mm) S = 1 3/8” Z6	1 3/8” Z21	1 3/4” Z6	1 3/4” Z20
6	1200	140	140	145	145
	1350	140	140	145	145
	1450	140	140	145	145

FFF34A Driveline codes

Setting Nm	S = 1 3/8” Z6	1 3/8” Z21	1 3/4” Z6	1 3/4” Z20
1200	**2S0**	- -	- -	- -
1350	**2S1**	- -	- -	**2V2**
1450	**2S2**	**2S9**	**2T6**	**2V3**

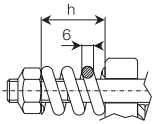

FFF34A Spare part codes

Size	Setting Nm	S = 1 3/8” Z6	1 3/8” Z21	1 3/4” Z6	1 3/4” Z20	h mm
6	1200	BC670H48303R	- -	- -	- -	29.5
	1350	BC670H51303R	- -	- -	BC670H51338R	29.2
	1450	BC670H53303R	BC670H53337R	BC670H53304R	BC670H53338R	29.0

To avoid excessive wear to the implement, driveline, or tractor, Bondioli & Pavesi recommends that the defined setting not to be altered.

All rotating parts must be guarded. The shields on the tractor and on the implement work with the integral driveline guard to form an interactive guarding system.

FFF34A

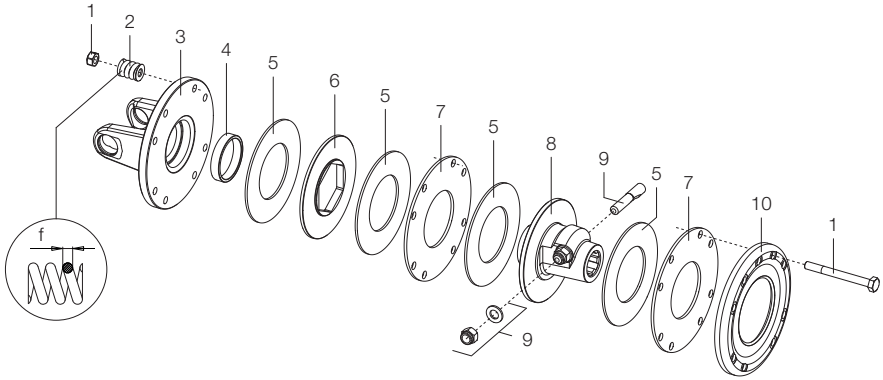

Ref.	Size	Spare part code	Description	Technical notes
1		432000007R08	Bolt	M10 x 100 mm cl 8.8
2		351022370R08	Coil springs	f = 6 mm
3	**6**	2530H1C05R	Flange yoke	
4		258005320R02	Bushing	
5		247006251R08	Friction lining	D = 141 ; d = 77 mm
6		248727701R02	Driving disc	
7		2481C0007R02	Inner disc	Sp = 4 mm
8		515890305R 515893705R 515890404R 515893804R	Hub with taper pin	1 3/8” Z6 1 3/8” Z21 1 3/4” Z6 1 3/4” Z20
9		408000047R02 408000049R02	Taper pin kit	1 3/8” Z6 - Z21 1 3/4” Z6 - Z20
10		248220007R02	Pressure plate	

The spare part number of the multi-packs ends with a letter “R” and two digits that show the number of units per package.

Friction clutches may become hot.
Do not touch!
Keep the area around the friction clutch clear of any material that could catch fire, and avoid prolonged slipping that will generate excess heat and wear

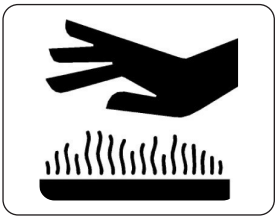

Size G9

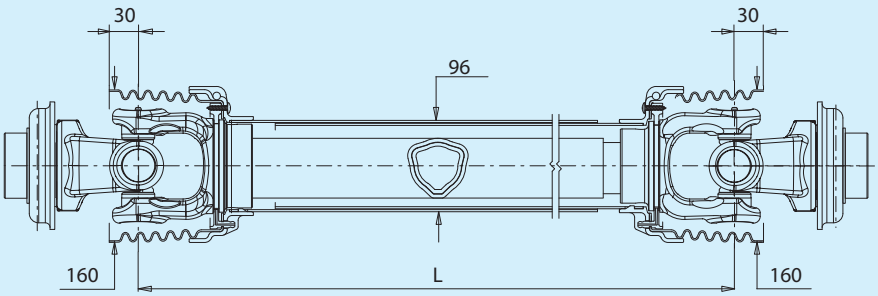

Single Cardan Joint

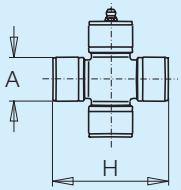

Size	540 min^{-1}				1000 min^{-1}			
	Mn		Pn		Mn		Pn	
	Nm	in·lb	kW	CV	Nm	in·lb	kW	CV
G9	1240	10950	70	95	1050	9300	110	150

Pn : Nominal power defined as the power associated with a 1000 hours lifetime of a joint operating joint angle 5° at 540 and 1000 rpm.
Mn : Nominal torque corresponding to the nominal power Pn..

BONDIOLI & PAVESI 邦贝 杭州

Code for cardan joint drivelines

1	2	3	
B	C	7	BC7 : Standard driveline.

4	5	
G	9	Size. G9

6	
N	Telescoping members. N - Normal triangular tubes.

7	8	9	
			Length. 051 - 056 - 061 - 066 - 071 - 076 - 081 - 086 - 091 - 101 - 111 - 121 See page 51 “Length“.

10	11	
		Safety labels and instruction manuals and restraint chains. **CE** - Drivelines with CE mark. **CU** - Drivelines with CE mark and both CE and US labels. **US** - Drivelines for North America (USA, Canada), without restraint chains. **U2** - Drivelines for North America (USA, Canada), with restraint chains. **JP** - Drivelines for Japan. **FX** - Drivelines for other countries or CEE-EFTA countries not bearing CE mark

12	13	14	
			Driver (or tractor) end. Specify the three-digit code for the yoke. See page 53.

15	16	17	
			Driven (or implement) end. Specify the three-digit code for the yoke, torque limiter or clutch. See page 53.

18	
	Additional position Add an “**X**“ letter at the end of the code for drive shaft running at 1000 min^{-1}.

All rotating parts must be guarded. The shields on the tractor and on the implement work with the integral driveline guard to form an interactive guarding system.
For primary drivelines (i.e. the driveline connecting the tractor PTO to the initial power input connection on the implement), torque limiters or overrunning clutches must be fitted on the implement end of the driveline.

Size G9

Cross kits

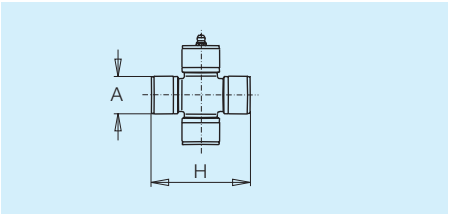

Cross kits for single cardan joints

The codes below refer to the cross kit as a spare part – complete with the four snap rings required for assembly. They are supplied in single-item or multiple-item packs. The pack quantity is indicate by the numbers following the “R” in the code.

	A mm	H mm	Cross kit code	Multiple-item pack code
G9	34.9	106.0	4120M0012	4120M0012R20

Telescoping Members

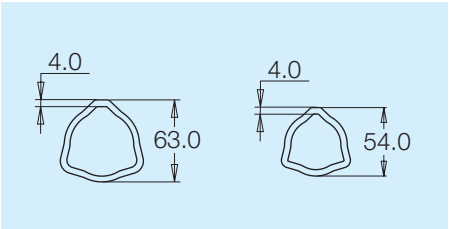

Triangle profile tube

Add the letter “N” in the fourth position of the shaft code to select regular triangle profile tubes.
Tubes as spare part are supplied either in 3-meter lengths, 1-meter lengths or 1-meter lengths tube drilled for roll pin.
Add “3000” or “1000” to the selected profile code to order 3-meter or 1-meter tubes respectively.
The code for the tubes drilled for the roll pin are shown in the chart below.

	Outer tube		Inner tube				
	Profile code	Cut/drilled tube code	Profile code	Cut/drilled tube code	Mmax mm	T/M N/Nm	
G9	12522	225721000R	12512	225711000R	3900	6 - 8	**N**

BONDIOLI & PAVESI 邦贝 杭州

Driveline length

The cardan joint driveline is the most commonly used method for transmitting power from a tractor PTO (power take off) to the PIC (power input connection) of an agricultural implement. The distance and angle between the PTO and PIC are constantly changing as the implement moves through the field. The variable extension of drivelines makes them easy to install and compensates for this relative motion between shafts, both in working conditions and when transporting the implement. Driveline length L is defined as the distance between the centers of the crosses, with the driveline fully collapsed.

Driveline length is represented in the code by the length L (3 digits) in centimeters.

Standard length and corresponding codes are shown below.

Other lengths are available on request (1 cm intervals).

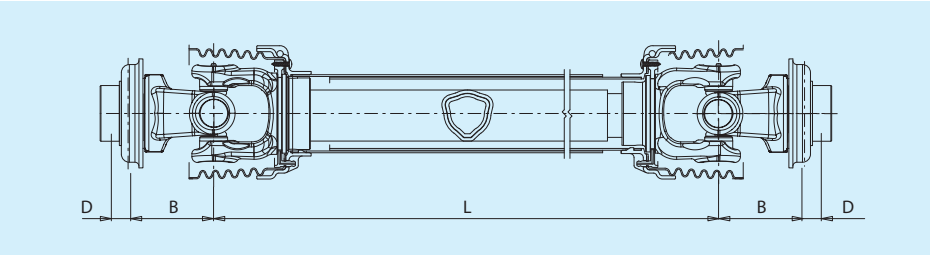

Triangle profile tubes

Lw is defined as the maximum allowable working length, center to center. For brief periods, such as traversing over bumps, the driveline may extend to the maximum temporary length, Lt. The maximum allowable length for non-rotating shafts is Ls.

Lw: maximum working length.

Lt: maximum temporary length.

Ls: maximum length for non-rotating shafts.

Code		041	046	051	056	061	066	071	076	081	086	091	101	111	121
Lenght L (mm)		410	460	510	560	610	660	710	760	810	860	910	1010	1110	1210
G9	Lw	- -	- -	555	655	755	855	945	1020	1095	1170	1245	1395	1545	1695
	Lt	- -	- -	630	730	830	930	1023	1106	1190	1273	1356	1523	1690	1856
	Ls	- -	- -	695	795	887	975	1062	1150	1237	1325	1412	1587	1762	1937

Lw and Lt refer to drivelines rotating at a maximum speed of 1000 min-1, except for items marked * which refer to a maximum speed of 540 min-1. For shaft lengths longer than those shown, or for speeds higher than 1000 min-1, please contact Bondioli & Pavesi's Engineering Department.

Safety labels and operator's manuals

(See pag. 11)

Country of destination	Destination code	Drive tube (inner) label	Shield tube (outer) label	Operator's manual
Drivelines bearing CE mark	**CE**	399143000	399LUB- - - 399CEE051	399UNI001
Drivelines bearing CE mark and both CE and US labels	**CU**	399143000	399LUB- - - 399CEE051 399141000	399UNI001
Drivelines for North America (USA, Canada, Mexico), without restraint chains.	**US**	399143000	399LUB- - - 399141000	399UNI001
Drivelines for North America (USA, Canada, Mexico), with restraint chains.	**U2**	399143000	399LUB- - - 399141000	399UNI001
Drivelines for Japan	**JP**	399143000	399LUB- - - 399JAP001	399UNI001
Drivelines for other countries and CEE – EFTA countries not bearing CE mark	**FX**	399143000	399LUB- - - 399CEE051	399UNI001

Restrain chains

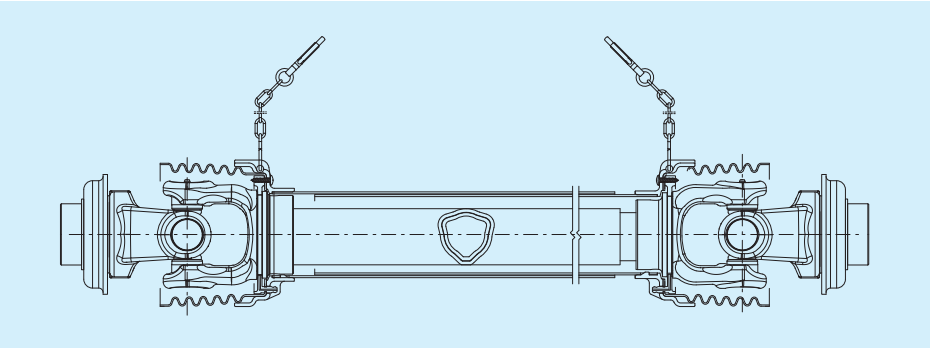

Drivelines are equipped with shield restraint for all markets, except the USA and Canada where they are optional.
S-hook connections of the restraint chains to the shield are standard.

The table below shows the characters used to specify the type of shield restraint, or to delete the shield restraints, if desired, for USA and Canada.

RT ball collar yokes

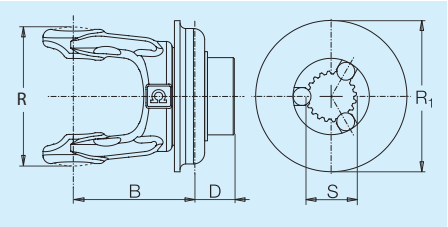

S	D mm	B mm	R_1 mm	R mm	End Code	Spare part Code	Ball collar Code
1 3/8” Z6	35	109	105	135	**R07**	5720M0354A	435000322R
1 3/8” Z21	35	109	105	135	**R08**	5720M3754A	435000322R
D8x32x38	35	109	120	135	**R93**	5720M2154A	435002116R
1 3/4” Z6	35	109	105	135	**R09**	5720M0454A	435000415R
1 3/4” Z20	35	109	105	135	**R10**	5720M3854A	435000415R
D8x42x48	24	107	120	135	**R92**	5720M9951A	435000003R

Taper-pin yokes for shaft with counter-clockwise rotation

Do not use on tractor’s PTO

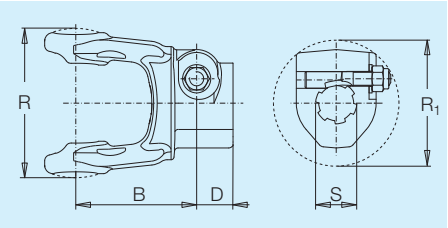

S	D mm	B mm	R_1 mm	R mm	End Code	Spare part Code	
1 3/8” Z6	31	103	107	124	**014**	5090M0360A	408000075R
1 3/4” Z20	31	103	124	124	**017**	5090M3860A	408000076R

Recommended tightening torque:
- 150 Nm for profiles 1 3/8” Z6
- 220 Nm for profiles 1 3/4” Z20

LB Shear bolt torque limiter

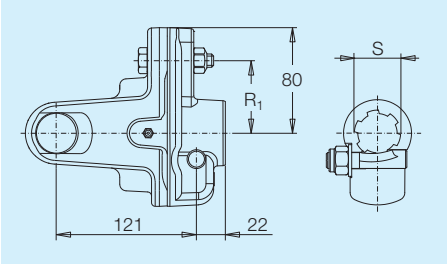

Setting Nm	S	R_1 mm	End Code	Spare part code	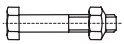
3000	1 3/8” Z6	62	1R0	BC6060M0306R	M10x50 Cl. 8.8

Spare part codes

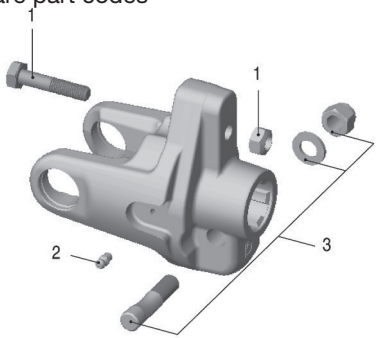

Ref.	Description	Spare part code	Technical data
1	Bolt	432000053R05	M10x50 Cl. 8.8
2	Grease fitting	348017000R20	
3	Taper pin	408000048R02	1 3/8” Z6 - Z21

This page is intentionally blanck

FV44 Friction torque limiter, adjustable setting

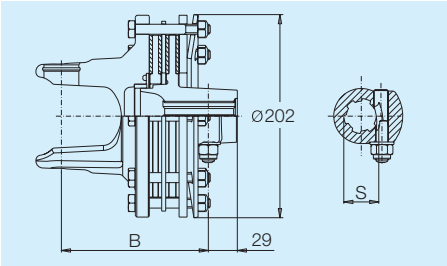

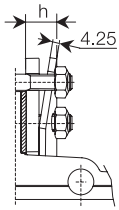

Setting Nm	S	B mm	End Code	Spare part code	h mm
2200	1 3/4” Z20	154	N83	BC661M62538R	18.6

To avoid excessive wear to the implement, driveline, or tractor, Bondioli & Pavesi recommends that the defined setting not to be altered.

All rotating parts must be guarded. The shields on the tractor and on the implement work with the integral driveline guard to form an interactive guarding system.

Spare part codes

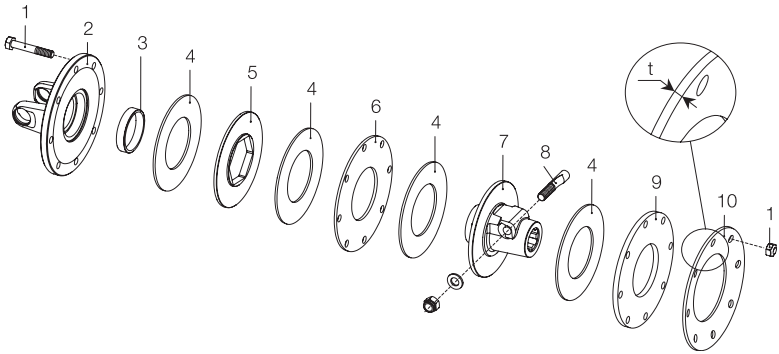

Ref.	Description	Spare part code	Technical data
1	Bolt	432000114R08	M10 x 75 mm
2	Flange yoke	253089001R	
3	Bushing	258005320R02	
4	Friction lining	247006351R08	D = 162 ; d = 85 mm
5	Driving plate	248737702R02	
6	Inner plate	248870011R02	Thickness = 4 mm
7	Hub with push pin	515903805R	1 3/4” Z20
8	Taper pin	408000046R02	1 3/4” Z20
9	Pressure plate	248870007R	Thickness = 8 mm
10	Belleville spring	367009870R	t = 4.25 mm

Friction clutches may become hot.
Do not touch!
Keep the area around the friction clutch clear of any material that could catch fire, and avoid prolonged slipping that will generate excess heat and wear

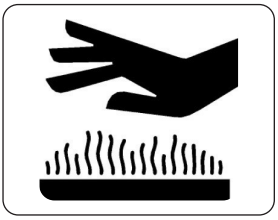

Safety shields

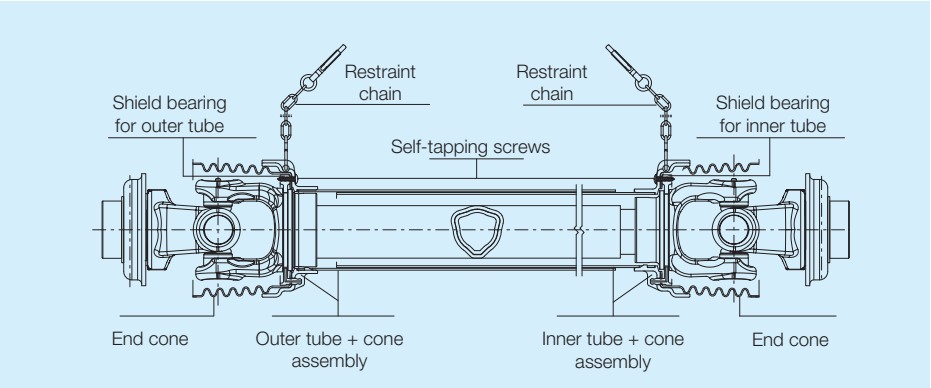

Complete shield kits for spare part

Complete shield kits for spare parts are sized to fit the drivelines on which they will be used.

Shield tubes can be cut to fit a specific driveline length, but the shield tubes should maintain sufficient overlap for all operating and transport conditions. Different types of joints, yokes, torque limiters and clutches have different shield requirements. The types of shield cones available are illustrated on the following pages.

Safety labels and operator's manuals are included according to the standards and regulations of the country of destination.

Shield kits are supplied with chains except for USA- Canada, where shields restraints are optional and may be deleted at the customer's request.
Bondioli & Pavesi drivelines and shields are tested to comply with UNI EN ISO 5674, UNI EN 12965 standards and are EC certified. Complete shields are supplied as spare parts and therefore, in compliance with the Machinery Directive, do not require CE marking. However, shield kits may be EC marked on request.

Regulations EN 1553 and ASAE S318.15 prescribe a 50 mm overlap of the driveline shield with the implement input connection shield.

All rotating parts must be guarded. The shields on the tractor and on the implement machine work with the integral driveline guard to form an interactive guarding system.
For primary drivelines (i.e. the driveline connecting the tractor PTO to the initial power input connection on the implement), torque limiters or overrunning clutches must be fitted on the implement end of the driveline.

Shield length

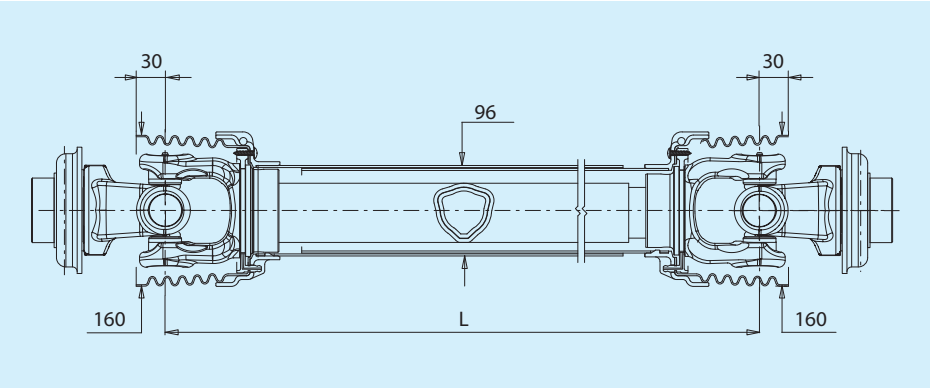

L [mm]	410	460	510	560	610	660	710	760	810	860	910	1010	1110	1210
	- -	- -	**051**	**056**	**061**	**066**	**071**	**076**	**081**	**086**	**091**	**101**	**111**	**121**

Codes for Global driveline complete shield kit

1 2

5 C

Shield kit.
5C

3 4

G 9

Size.
G9

5 6 7

Length.
Triangle profile tube:
051 - 056 - 061 - 066 - 071 - 076 - 081 - 086 - 091 - 101 - 111 - 121.

8 9

Warning labels, operator's manual and restrain chains.

Country of destination	with chains	without chains
CEE-EFTA countries bearing EC mark.	CE	-
Drivelines with both CE and US labels bearing EC mark.	CU	-
North America (USA, Canada and Mexico)	U2	US
Japan	JP	-
Other countries and CEE-EFTA countries not bearing CE mark.	FX	-

10 11

Shield cone.

End type	tractor end	implement end
Single cardan joint	S	S

Size G9

Shield bearings for outer tube

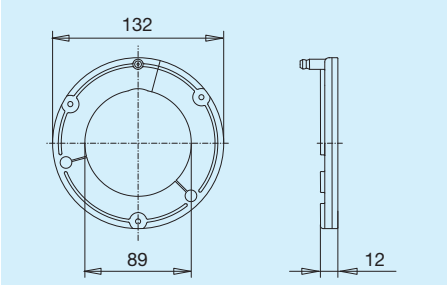

	Spare part code
G9	2550G0001R02

Shield bearings for inner tube

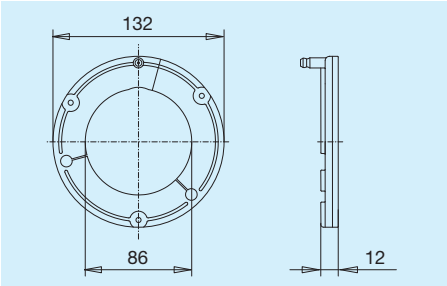

	Spare part code
G9	2550G0002R02

398CDS004EN00 - 0720

BONDIOLI & PAVESI HYDRAULIC AND MECHANICAL COMPONENT (HANGZHOU) CO. LTD
N°420 of Beitang East Road, Xinjie Town, Xiaoshan District, HANGZHOU CITY, 311217 Zhejiang Province
Tel.: (0571) 83508180 -Telefax (0571) 83508178 - 83508177 - E-mail customer_service@bypychina.com
www.bondioli-pavesi.com