A31

Before using the heat exchanger, carefully read the document entitled GENERAL INSTRUCTIONS FOR HEAT EXCHANGER USE.

Dimensions

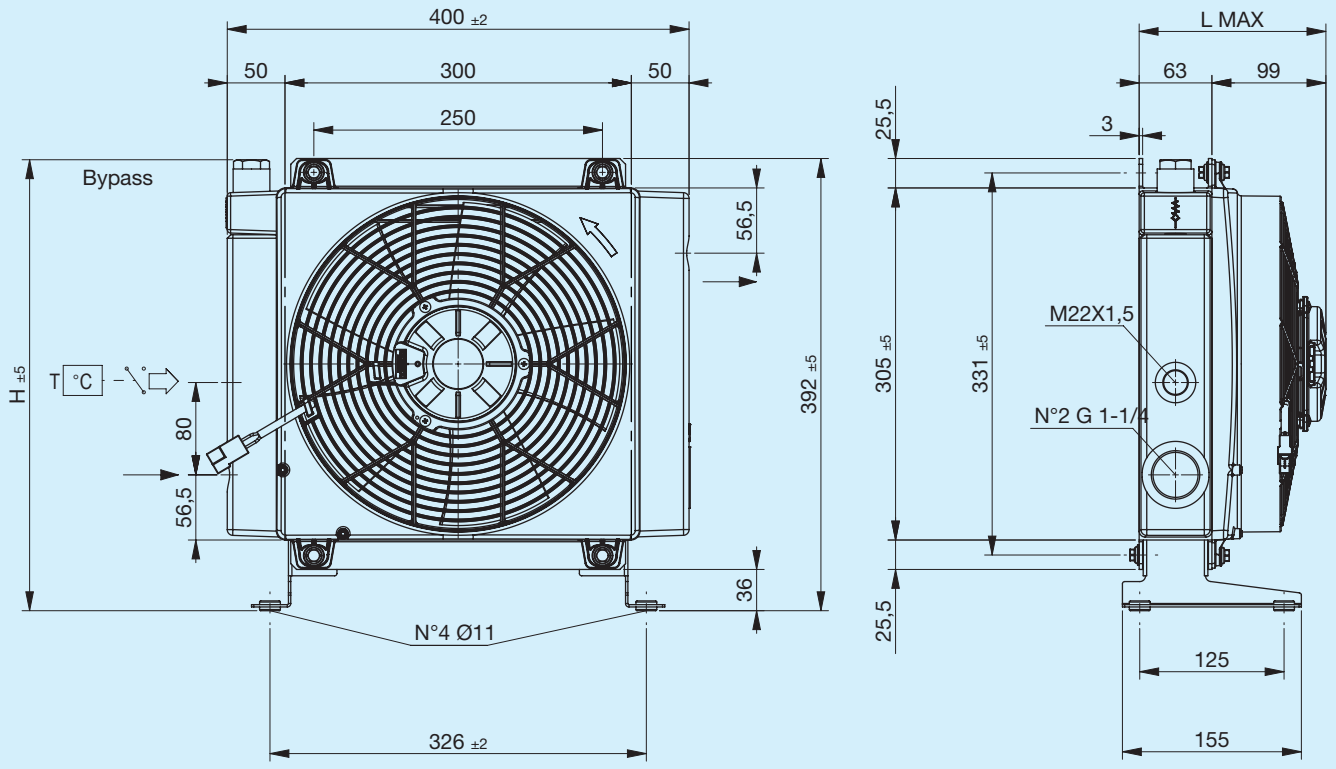

Support foot not included (see Accessories)

Code	Description	ΦFan mm	Air flow rate m³/h	Voltage V	Current A	L Max mm	H mm	Weight Kg	Capacity l
FR633173105	**A31 1EAX 12V bypass T15 V.T. 3 bar 60°C**	280	2350	12	15	200	391	10.5	3.2
FR633173106	**A31 1ESX 12V bypass T15 V.T. 3 bar 60°C**	280	2350	12	15	200	391	10.5	3.2
FR633171005	**A31 1EAX 12V bypass T15 VNR 4.5 bar**	280	2350	12	15	200	375	10.5	3.2
FR633171006	**A31 1ESX 12V bypass T15 VNR 4.5 bar**	280	2350	12	15	200	375	10.5	3.2
FR633173115	**A31 1EAX 24V bypass T15 V.T. 3 bar 60°C**	280	2500	24	7	200	391	10.5	3.2
FR633173116	**A31 1ESX 24V bypass T15 V.T. 3 bar 60°C**	280	2500	24	7	200	391	10.5	3.2
FR633171015	**A31 1EAX 24V bypass T15 VNR 4.5 bar**	280	2500	24	7	200	375	10.5	3.2
FR633171016	**A31 1ESX 24V bypass T15 VNR 4.5 bar**	280	2500	24	7	200	375	10.5	3.2
FR633170003	**A31 1EAP 12V**	280	1570	12	6.9	155	394.5	9.7	3.2
FR633170004	**A31 1ESP 12V**	280	1480	12	6.3	155	394.5	9.7	3.2
FR633170005	**A31 1EAX 12V**	280	2350	12	15	200	394.5	10.5	3.2
FR633170006	**A31 1ESX 12V**	280	2350	12	15	200	394.5	10.5	3.2
FR633170013	**A31 1EAP 24V**	280	1580	24	3.5	155	394.5	9.7	3.2
FR633170014	**A31 1ESP 24V**	280	1520	24	3.3	155	394.5	9.7	3.2
FR633170015	**A31 1EAX 24V**	280	2500	24	7	200	394.5	10.5	3.2
FR633170016	**A31 1ESX 24V**	280	2500	24	7	200	394.5	10.5	3.2

Characteristic curves

Heat exchange (thermal) capacity

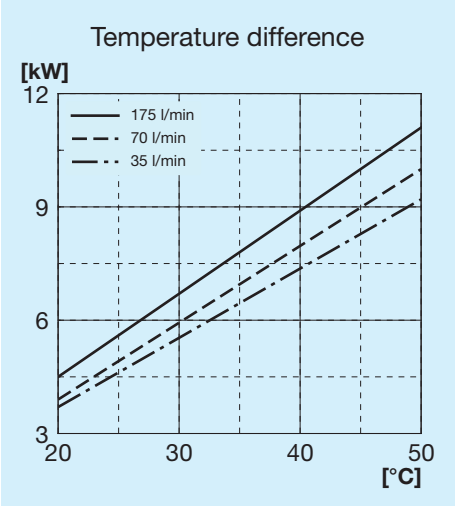

Radiator passage pressure drop

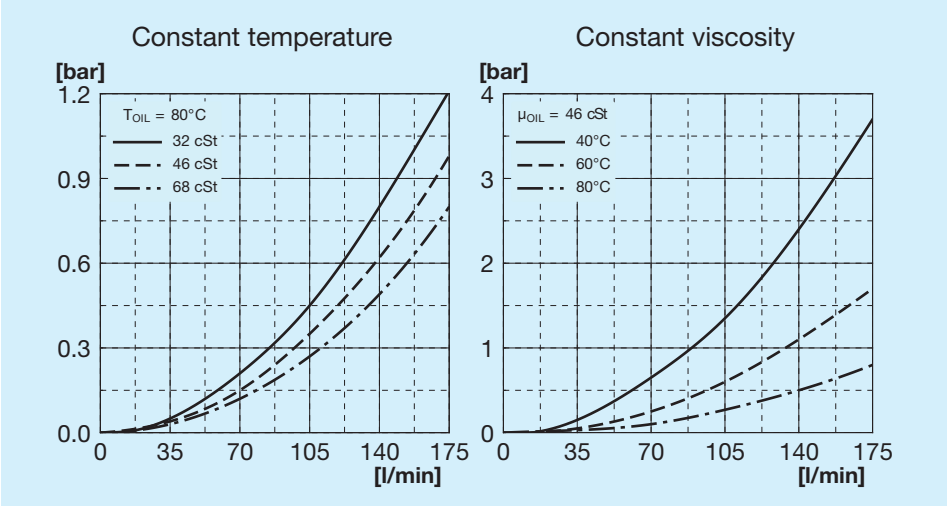

Bypass passage load loss

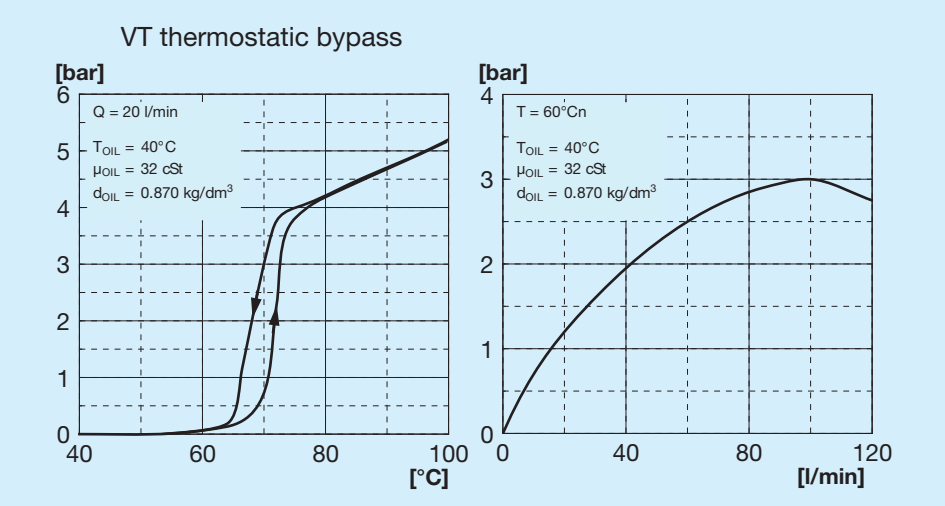

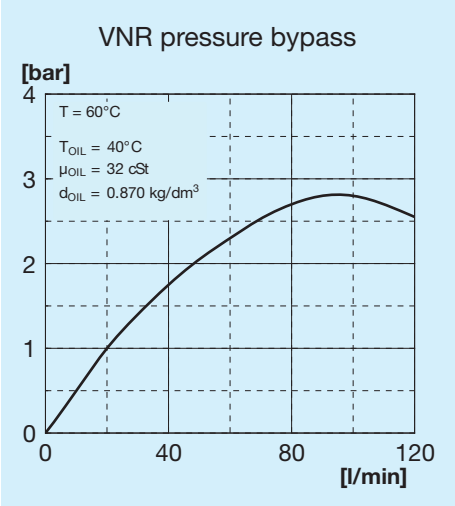

Bypass valves

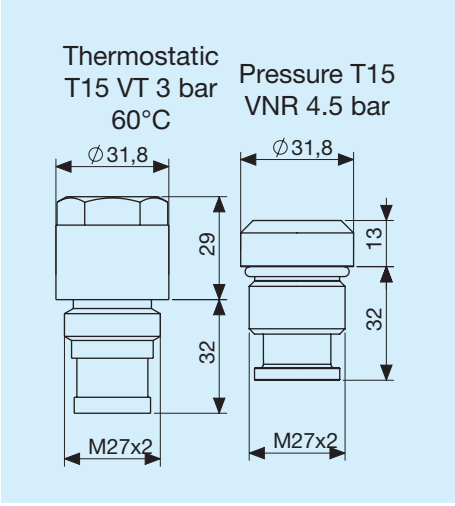

Legend

A31	Exchanger type
1E	1 Fan unit
A	Aspirating
S	Blowing
AP	High power aspirating
SP	High power blower
AX	Extra high power aspirating
SX	Extra high power blower
12V	Fan unit voltage
24V	Fan unit voltage
T15 VT	Thermostatic bypass valve 3 bar 60°C
T15 VNR	Pressure bypass valve at 4.5 bar

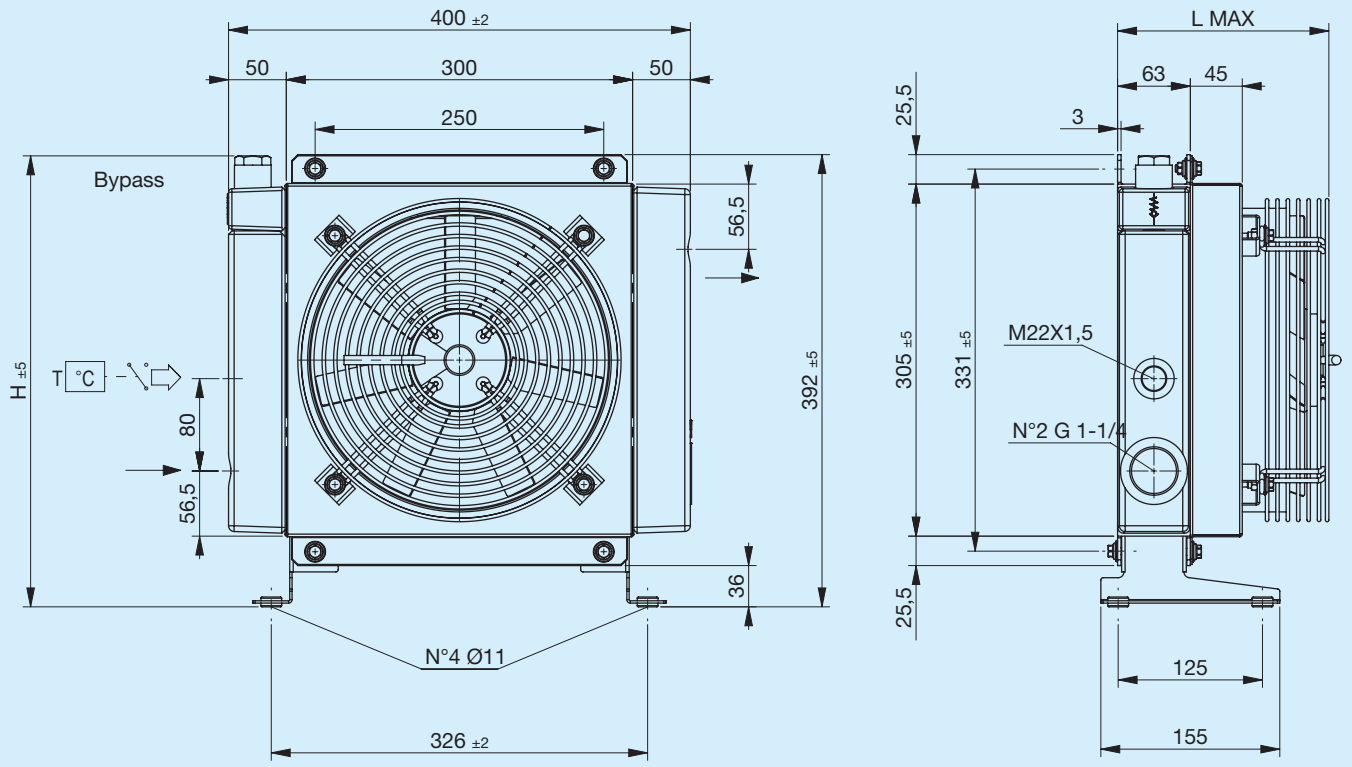

Support foot not included (see Accessories)

Code	Description	ΦFan mm	Power W	Frequency Hz	Speed min-¹	Protection IP	L Max mm	H mm	Weight Kg	Capacity l
FR633173131	**A31 1EA 230V bypass T15 V.T. 3 bar 60°C**	250	160	50 60	2500 2600	44	183	391	10	3.2
FR633173132	**A31 1ES 230V bypass T15 V.T. 3 bar 60°C**	250	160	50 60	2500 2600	44	183	391	10	3.2
FR633171031	**A31 1EA 230V bypass T15 VNR 4.5 bar**	250	160	50 60	2500 2600	44	183	375	10	3.2
FR633171032	**A31 1ES 230V bypass T15 VNR 4.5 bar**	250	160	50 60	2500 2600	44	183	375	10	3.2
FR633173121	**A31 1EA 400V bypass T15 V.T. 3 bar 60°C**	250	160	50 60	2450 2550	44	183	391	10	3.2
FR633173122	**A31 1ES 400V bypass T15 V.T. 3 bar 60°C**	250	160	50 60	2450 2550	44	183	391	10	3.2
FR633171021	**A31 1EA 400V bypass T15 VNR 4.5 bar**	250	160	50 60	2450 2550	44	183	375	10	3.2
FR633171022	**A31 1ES 400V bypass T15 VNR 4.5 bar**	250	160	50 60	2450 2550	44	183	375	10	3.2
FR633170031	**A31 1EA 230V**	250	160	50 60	2500 2600	44	183	394.5	10	3.2
FR633170032	**A31 1ES 230V**	250	160	50 60	2500 2600	44	183	394.5	10	3.2
FR633170021	**A31 1EA 400V**	250	160	50 60	2450 2550	44	183	394.5	10	3.2
FR633170022	**A31 1ES 400V**	250	160	50 60	2450 2550	44	183	394.5	10	3.2

Heat exchange (thermal) capacity

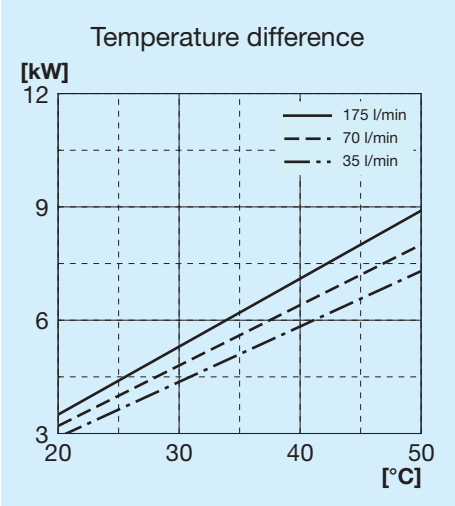

Radiator passage pressure drop

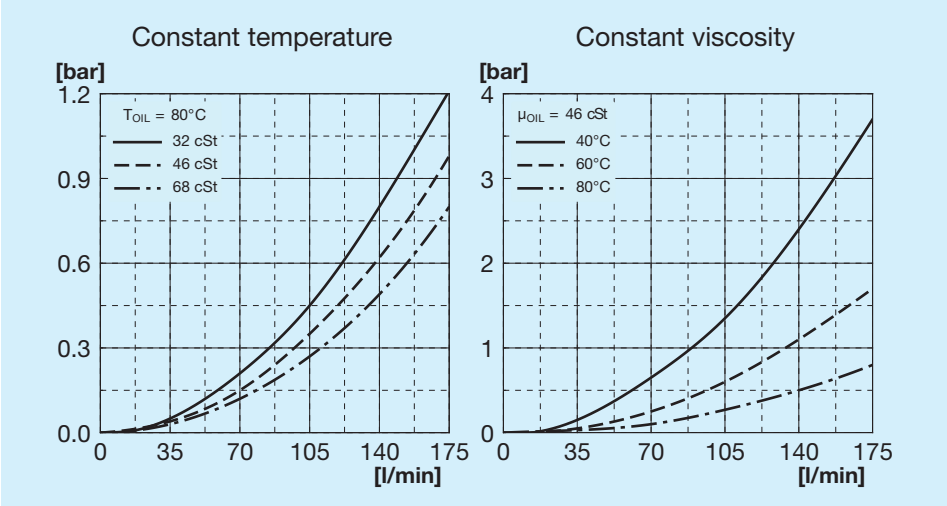

Bypass passage load loss

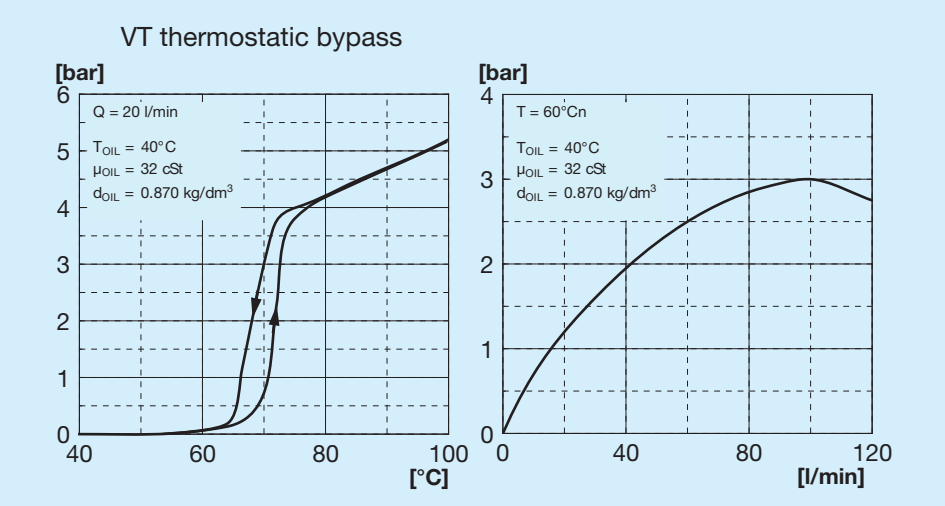

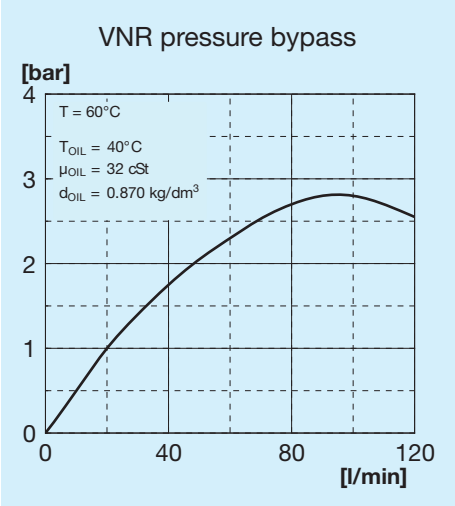

Bypass valves

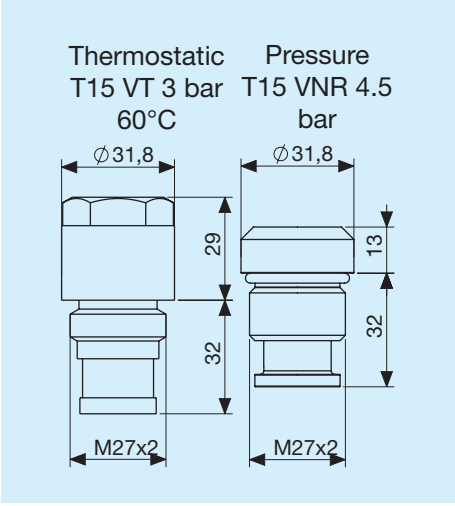

Legend

A31	Exchanger type
1E	1 Fan unit
A	Aspirating
S	Blowing
230V	Fan unit voltage
400V	Fan unit voltage
T15 VT	Thermostatic bypass valve 3 bar 60°C
T15 VNR	Pressure bypass valve at 4.5 bar

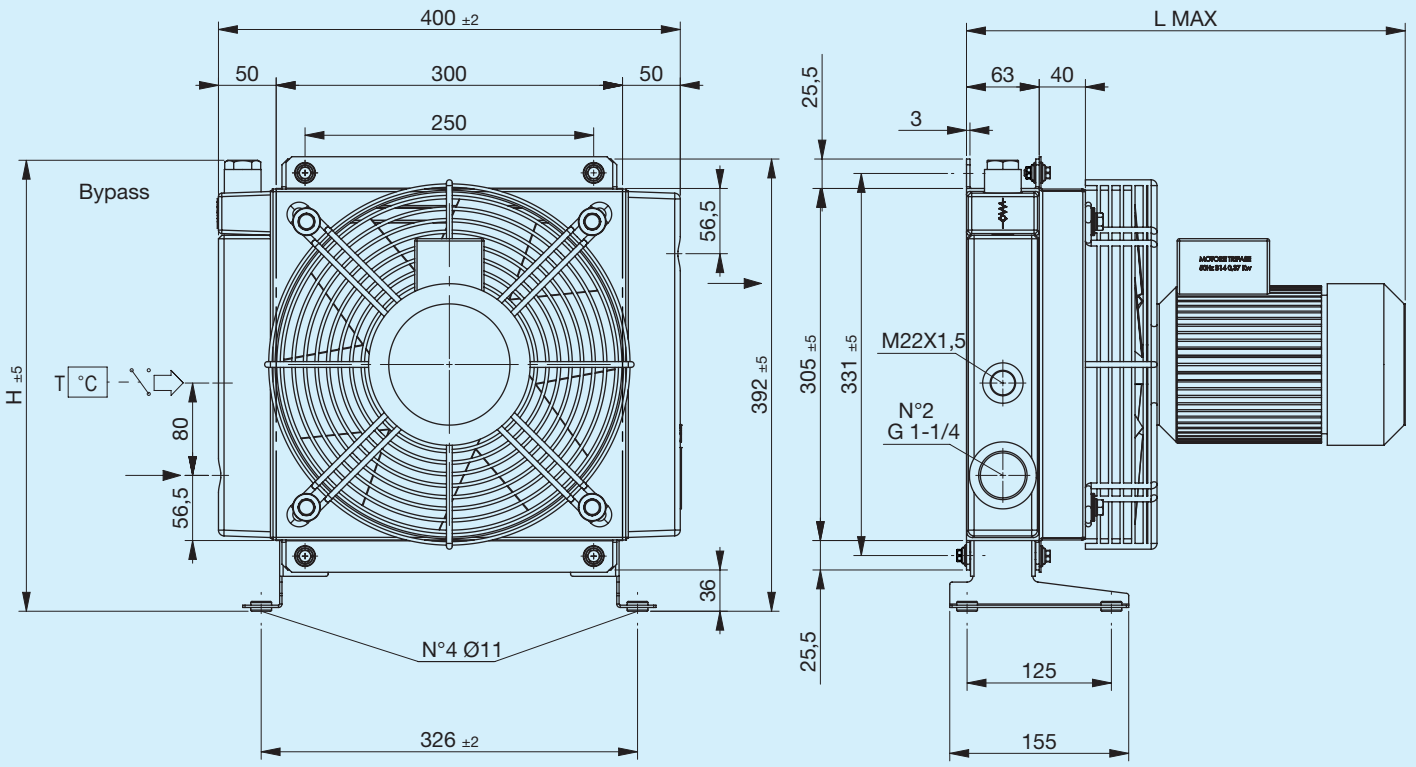

Support foot not included (see Accessories)

Code	Description	ΦFan	Power	Frequency	Speed	Protection	L Max	H	Weight	Capacity
		mm	W	Hz	min-¹	IP	mm	mm	Kg	l
FR633173141	**A31 1EA 220V-B14 bypass T15 V.T. 3 bar 60°C**	290	370	50	2790	65	380	391	14.5	3.2
FR633171041	**A31 1EA 220V-B14 bypass T15 VNR 4.5 bar**	290	370	50	2790	65	380	375	14.5	3.2
FR633173151	**A31 1EA 380V-B14 bypass T15 V.T. 3 bar 60°C**	290	370	50	2790	65	380	391	14.5	3.2
FR633173152	**A31 1ES 380V-B14 bypass T15 V.T. 3 bar 60°C**	290	370	50	2790	65	380	391	14.5	3.2
FR633171051	**A31 1EA 380V-B14 bypass T15 VNR 4.5 bar**	290	370	50	2790	65	380	375	14.5	3.2
FR633171052	**A31 1ES 380V-B14 bypass T15 VNR 4.5 bar**	290	370	50	2790	65	380	375	14.5	3.2
FR633170041	**A31 1EA 220V-B14**	290	370	50	2790	65	380	394.5	14.5	3.2
FR633170042	**A31 1ES 220V-B14**	290	370	50	2790	65	380	394.5	14.5	3.2
FR633170051	**A31 1EA 380V-B14**	290	370	50	2790	65	380	394.5	14.5	3.2
FR633170052	**A31 1ES 380V-B14**	290	370	50	2790	65	380	394.5	14.5	3.2

Heat exchange (thermal) capacity

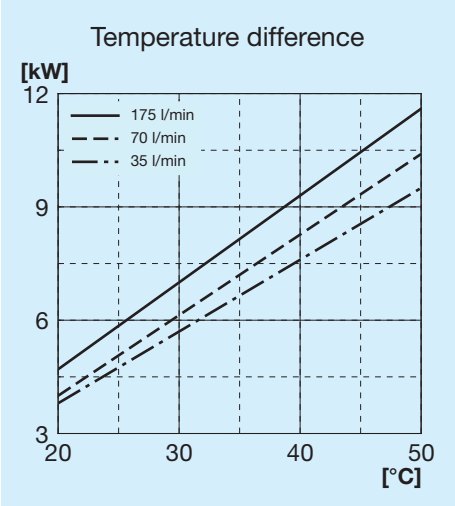

Radiator passage pressure drop

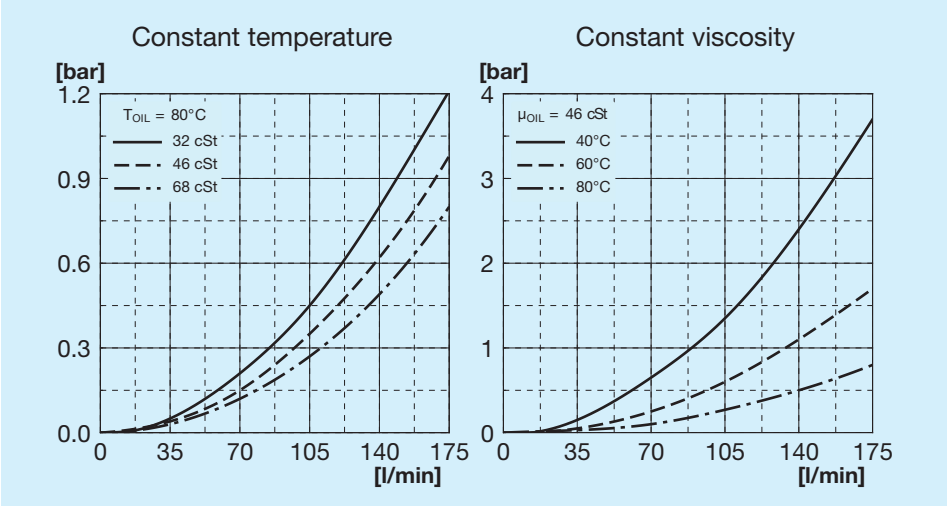

Bypass passage load loss

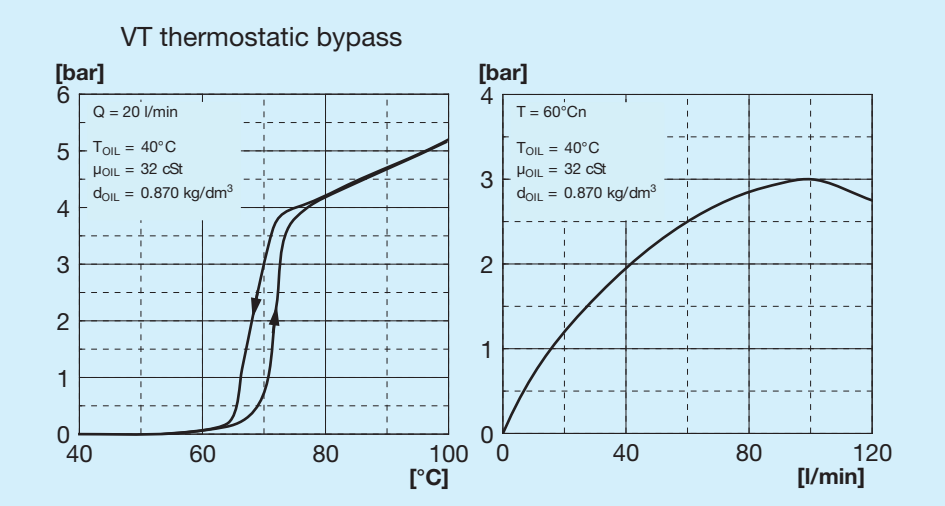

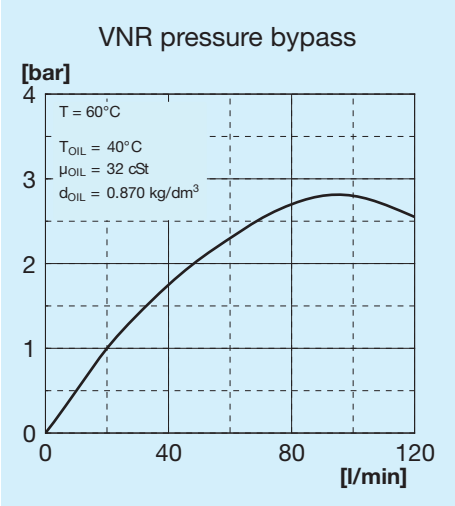

Bypass valves

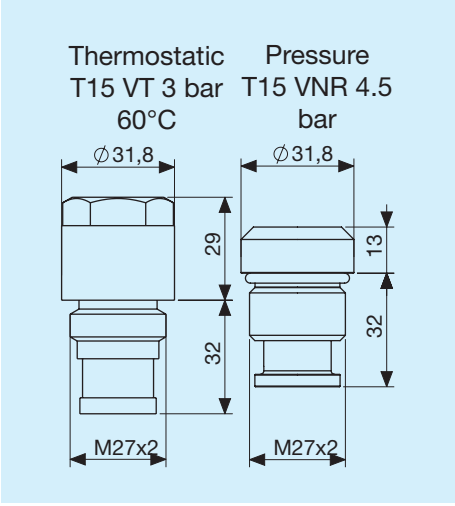

Legend

A31	Exchanger type
1E	1 Fan unit
A	Aspirating
S	Blowing
230V B14	Fan unit voltage
400V B14	Fan unit voltage
T15 VT	Thermostatic bypass valve 3 bar 60°C
T15 VNR	Pressure bypass valve at 4.5 bar

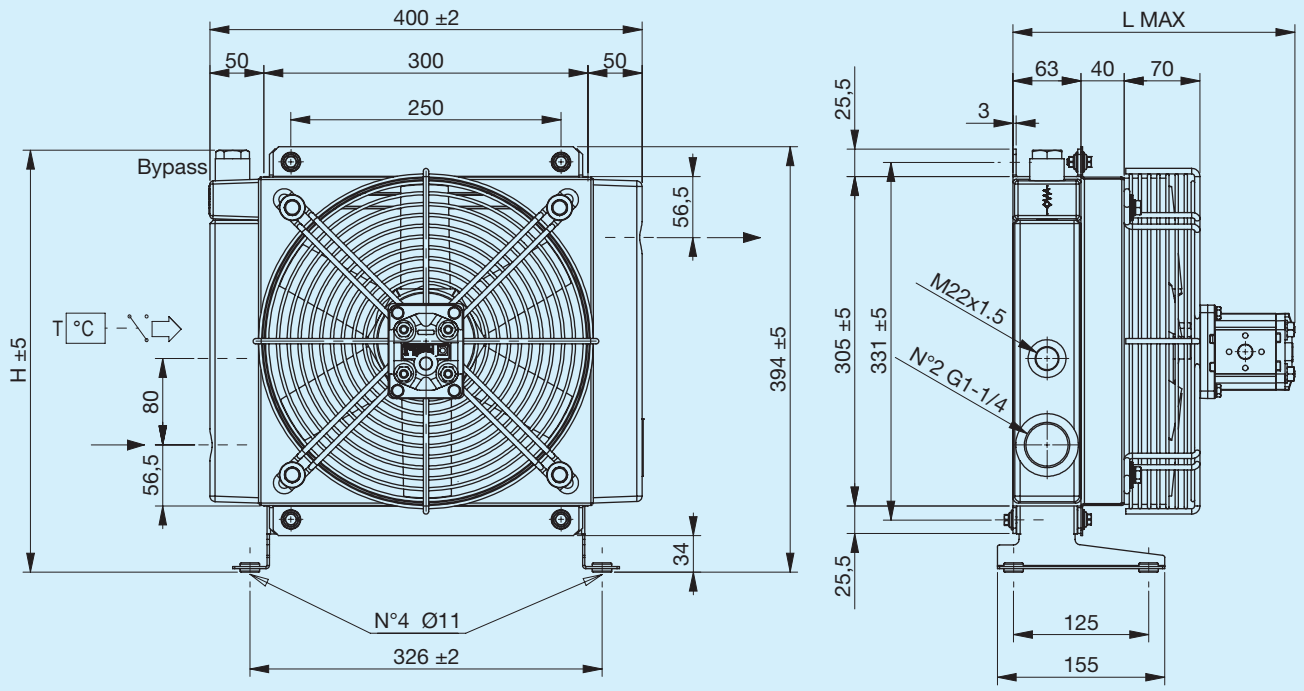

Support foot not included (see Accessories)

Code	Description	ΦFan mm	Motor displacement cm3	L Max mm	H mm	Weight Kg	Capacity l
FR634173113	**A31 IA HYDR.MOT. GR1 bypass T15 V.T. 3 bar 60°C**	290	6	261	391	14	3.2
FR634173114	**A31 IS HYDR.MOT. GR1 bypass T15 V.T. 3 bar 60°C**	290	6	261	391	14	3.2
FR634171013	**A31 IA HYDR.MOT. GR1 bypass T15 VNR 4.5 bar**	290	6	261	375	14	3.2
FR634171014	**A31 IS HYDR.MOT. GR1 bypass T15 VNR 4.5 bar**	290	6	261	375	14	3.2
FR634170013	**A31 IA HYDR.MOT. GR1**	290	6	261	394	14	3.2
FR634170014	**A31 IS HYDR.MOT. GR1**	290	6	261	394	14	3.2

Heat exchange (thermal) capacity

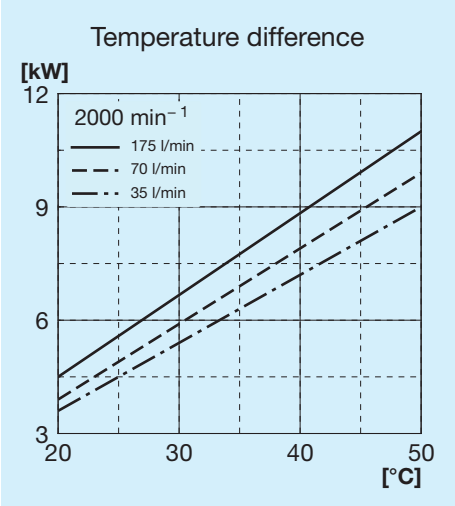

Radiator passage pressure drop

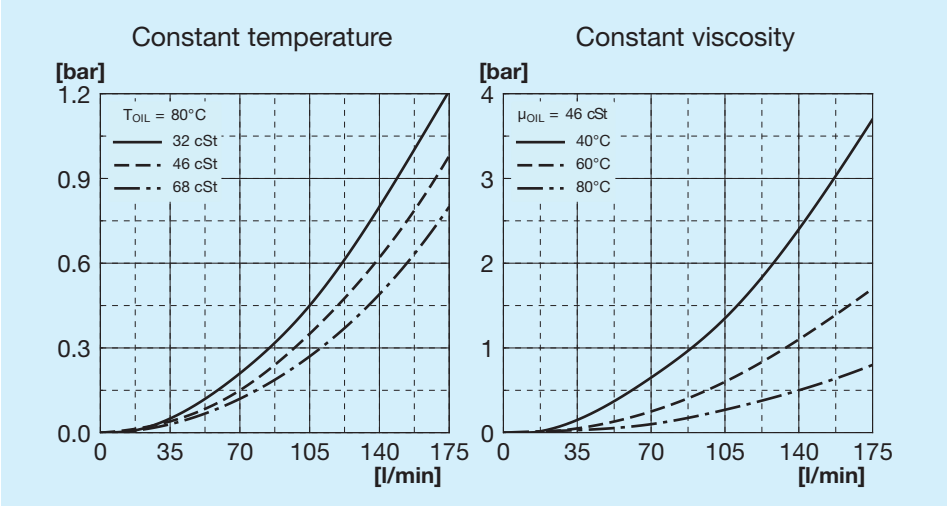

Bypass passage load loss

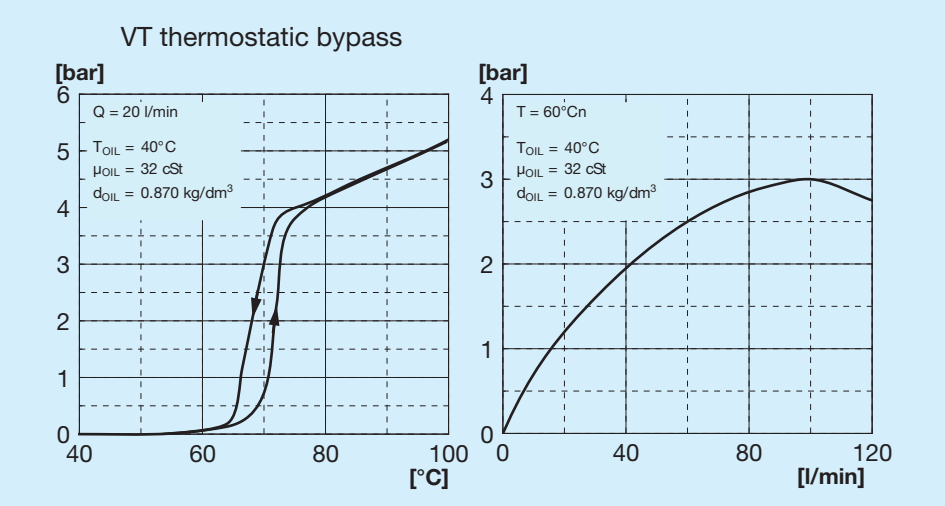

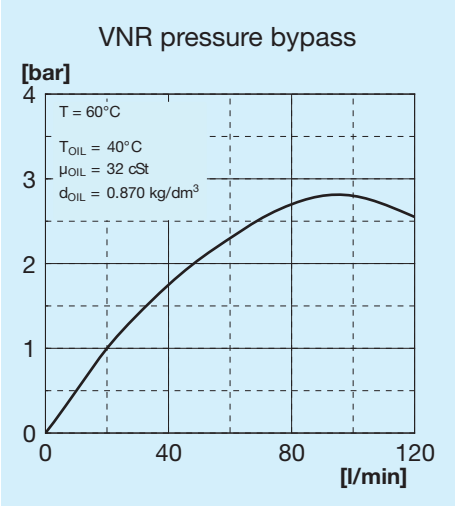

Bypass valves

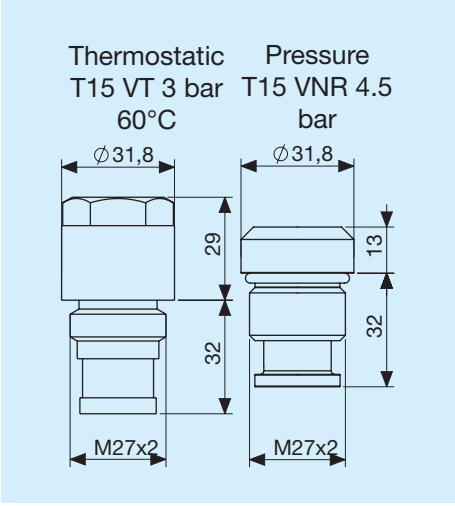

Legend

A31	Exchanger type
IA	Hydraulic aspirating
IS	Hydraulic blowing
SETT.	With motor mounting
HYD. MOT.	With integrated motor mounting
GR1	Group 1
GR2	Group 2
T15 VT	Thermostatic bypass valve 3 bar 60°C
T15 VNR	Pressure bypass valve at 4.5 bar

Left supporting foot

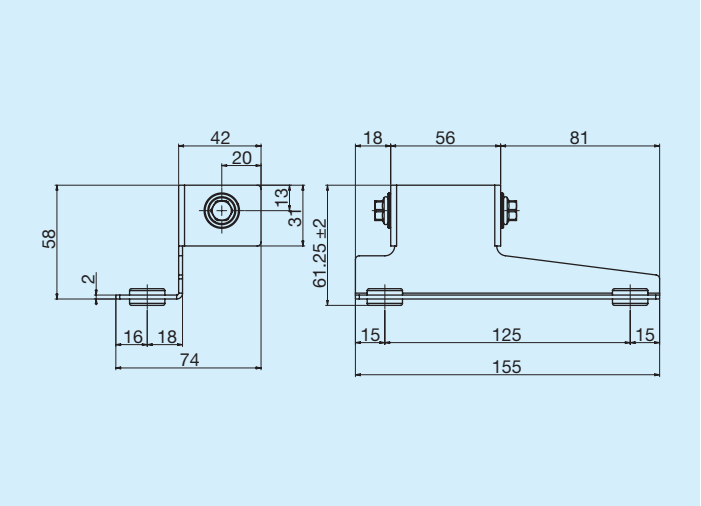

	Code
Left supporting foot	FR290000011R

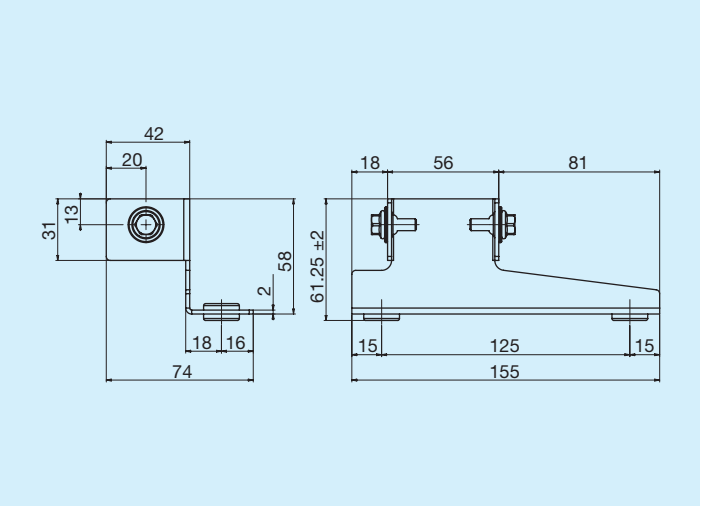

	Code
Right supporting foot	FR290000012R

Thermostats

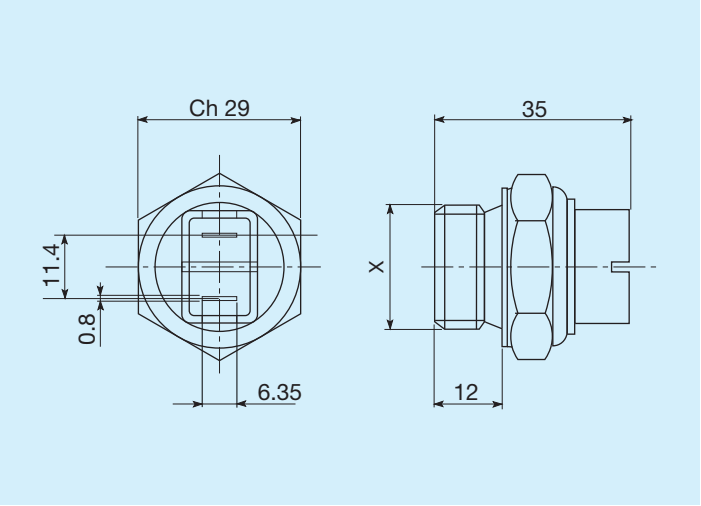

Trigger temperature C°	Threading	Code
45 - 35	M22x1.5	FR361104535R
60 - 50	M22x1.5	FR361106050R
80 - 70	M22x1.5	FR361108070R
82 - 68	M22x1.5	FR361108268R
85 - 76	M22x1.5	FR361108576R

IP54 protected thermal switch

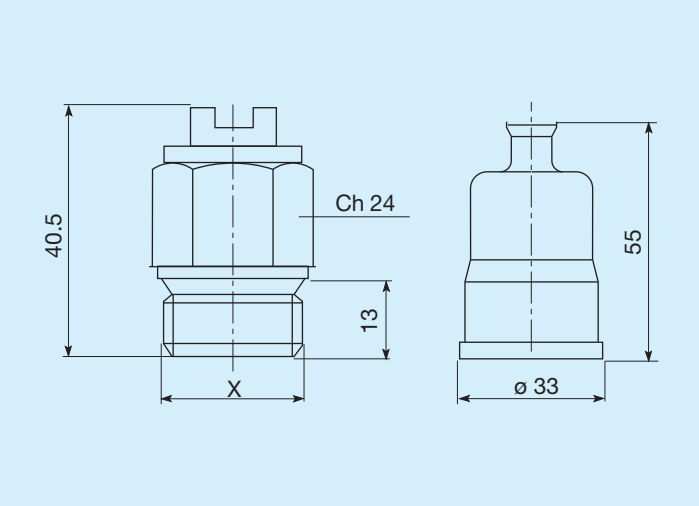

Trigger temperature C°	Threading	Code
45 - 35	M22x1.5	FR361124535R
50 - 40	M22x1.5	FR361125040R
60 - 50	M22x1.5	FR361126050R
70 - 60	M22x1.5	FR361127060R
80 -70	M22x1.5	FR361128070R

IP65 protected thermal switch

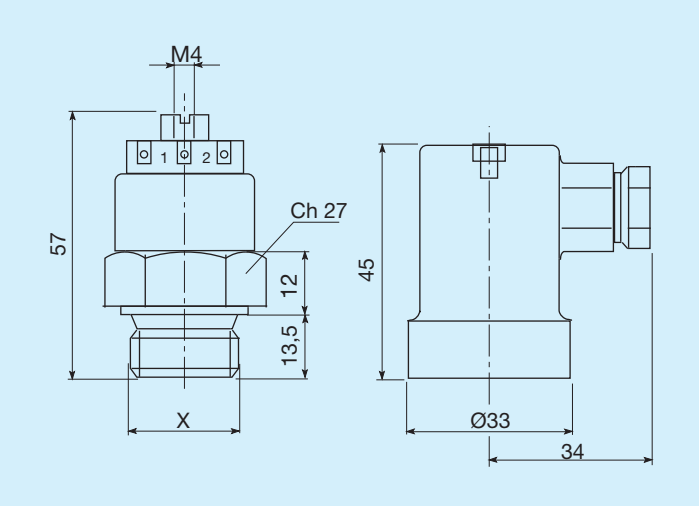

Trigger temperature C°	Threading	Code
45 - 35	M22x1.5	FR361154535R
47 - 36	M22x1.5	FR361155040R
60 - 50	M22x1.5	FR361176050R
80 - 70	M22x1.5	FR361158070R