A56

Before using the heat exchanger, carefully read the document entitled GENERAL INSTRUCTIONS FOR HEAT EXCHANGER USE.

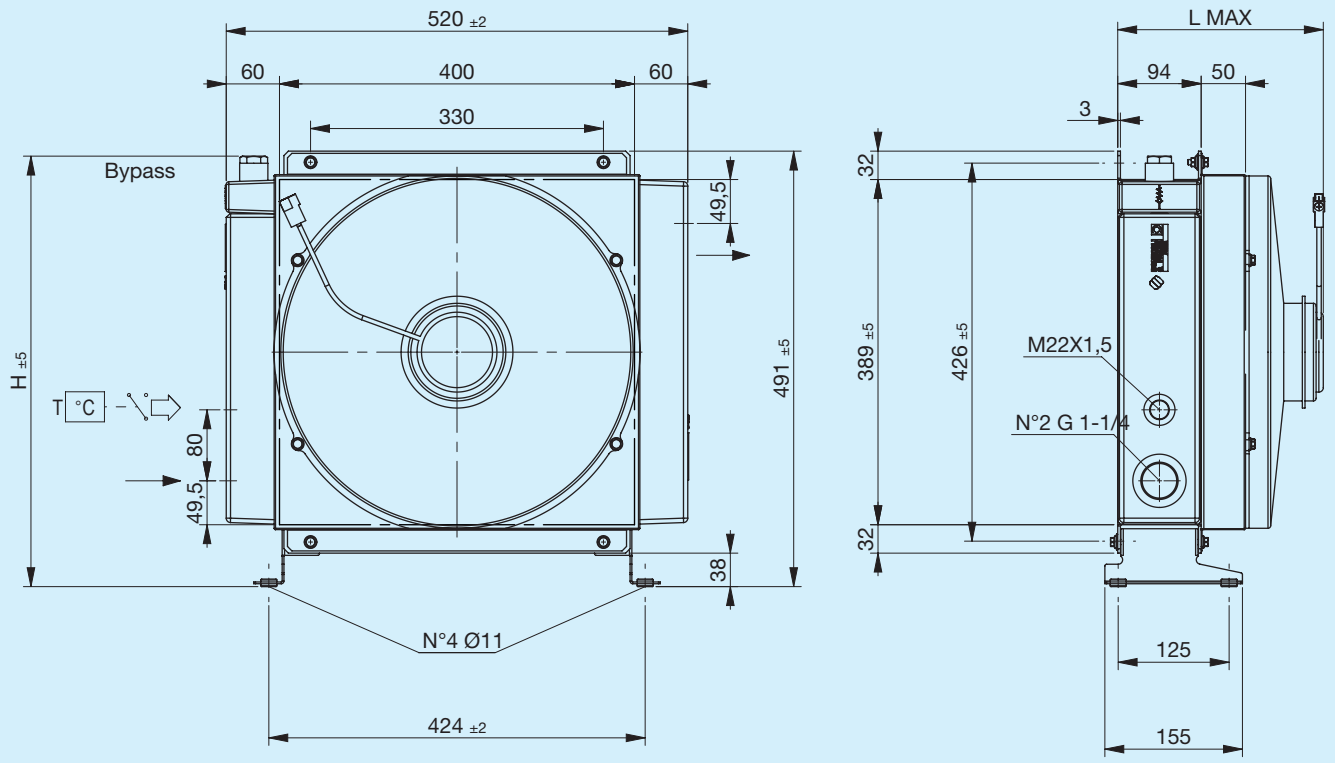

Support foot not included (see Accessories)

Code	Description	Ø Fan	Air flow rate	Voltage	Current	L Max	H	Weight	Capacity
		mm	m³/h	V	A	mm	mm	Kg	l
FR633223105	A56 1EAX 12V bypass T15 V.T. 3 bar 60°C	385	2850	12	19,7	235	485	16.5	7.5
FR633223106	A56 1ESX 12V bypass T15 V.T. 3 bar 60°C	385	3070	12	18,7	235	485	16.5	7.5
FR633221005	A56 1EAX 12V bypass T15 VNR 4.5 bar	385	2850	12	19,7	235	469	16.5	7.5
FR633221006	A56 1ESX 12V bypass T15 VNR 4.5 bar	385	3070	12	18,7	235	469	16.5	7.5
FR633223115	A56 1EAX 24V bypass T15 V.T. 3 bar 60°C	385	3070	24	10	235	485	16.5	7.5
FR633223116	A56 1ESX 24V bypass T15 V.T. 3 bar 60°C	385	3180	24	9,4	235	485	16.5	7.5
FR633221015	A56 1EAX 24V bypass T15 VNR 4.5 bar	385	3070	24	10	235	469	16.5	7.5
FR633221016	A56 1ESX 24V bypass T15 VNR 4.5 bar	385	3180	24	9,4	235	469	16.5	7.5
FR633220003	A56 1EAP 12V	385	1260	12	7,4	200	492	15.5	7.5
FR633220004	A56 1ESP 12V	385	1280	12	7	200	492	15.5	7.5
FR633220005	A56 1EAX 12V	385	2850	12	19,7	235	492	16.5	7.5
FR633220006	A56 1ESX 12V	385	3070	12	18,7	235	492	16.5	7.5
FR633220013	A56 1EAP 24V	385	1410	24	4,2	200	492	15.5	7.5
FR633220014	A56 1ESP 24V	385	1380	24	3,9	200	492	15.5	7.5
FR633220015	A56 1EAX 24V	385	3070	24	10	235	492	16.5	7.5
FR633220016	A56 1ESX 24V	385	3180	24	9,4	235	492	16.5	7.5

Characteristic curves

Heat exchange (thermal) capacity

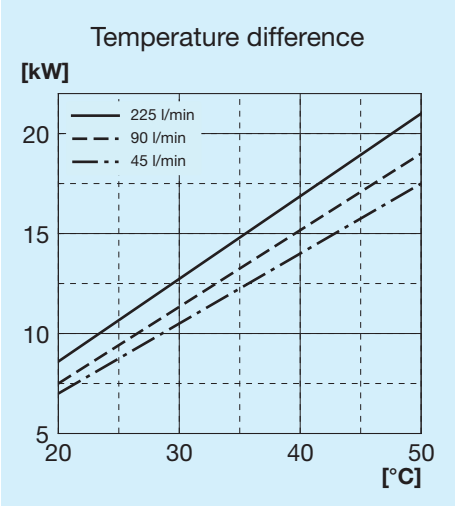

Radiator passage pressure drop

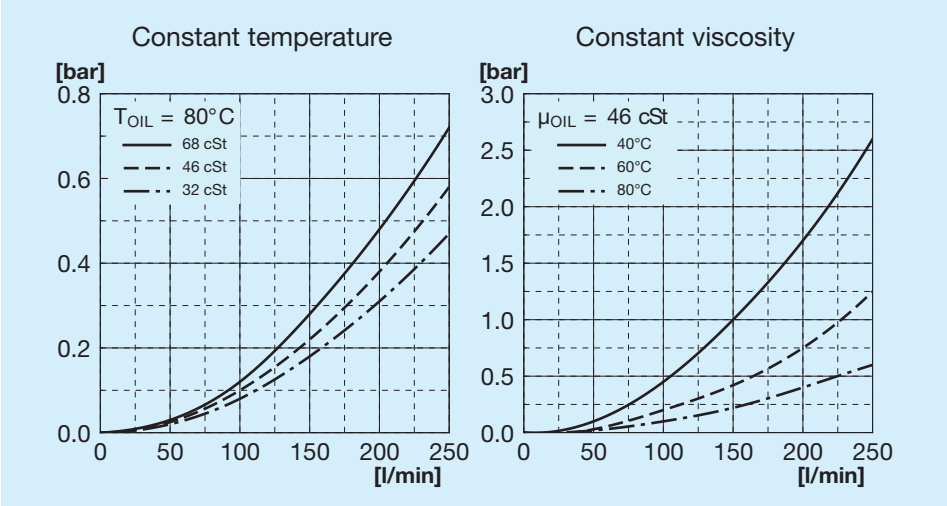

Bypass passage load loss

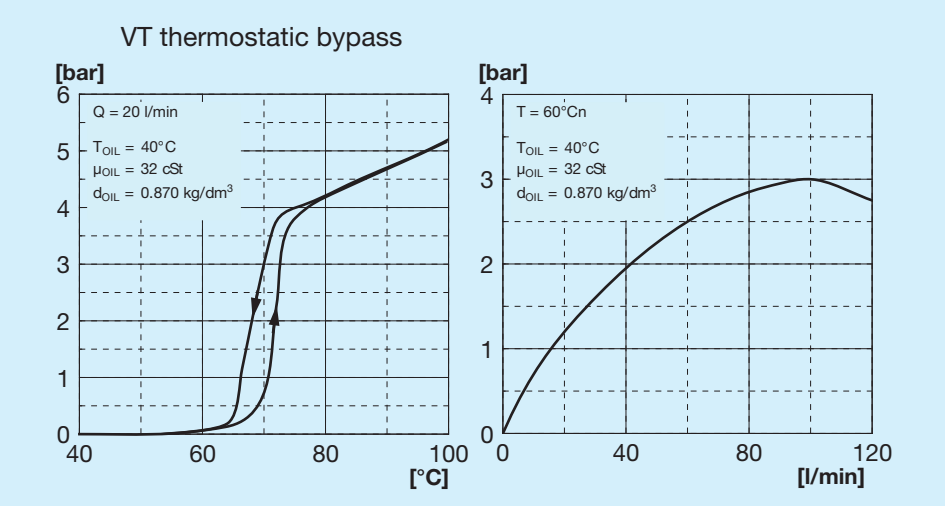

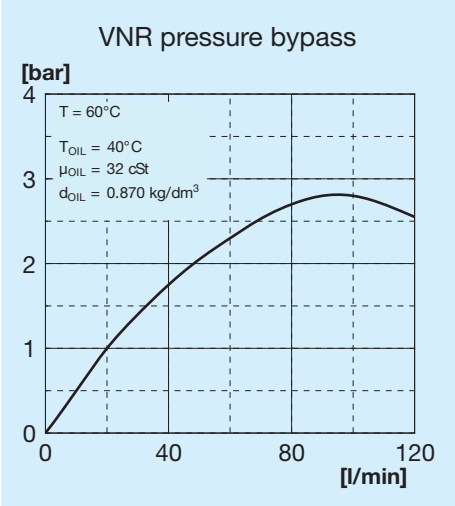

Bypass valves

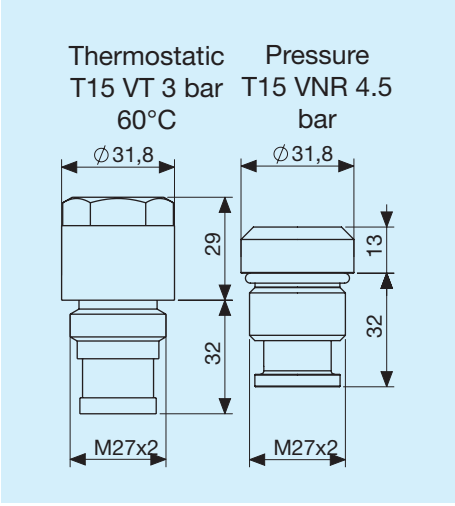

Legend

A56	Exchanger type
1E	1 Fan unit
A	Aspirating
S	Blowing
AP	High power aspirating
SP	High power blower
AX	Extra high power aspirating
SX	Extra high power blower
12V	Fan unit voltage
24V	Fan unit voltage
T15 VT	Thermostatic bypass valve 3 bar 60°C
T15 VNR	Pressure bypass valve at 4.5 bar

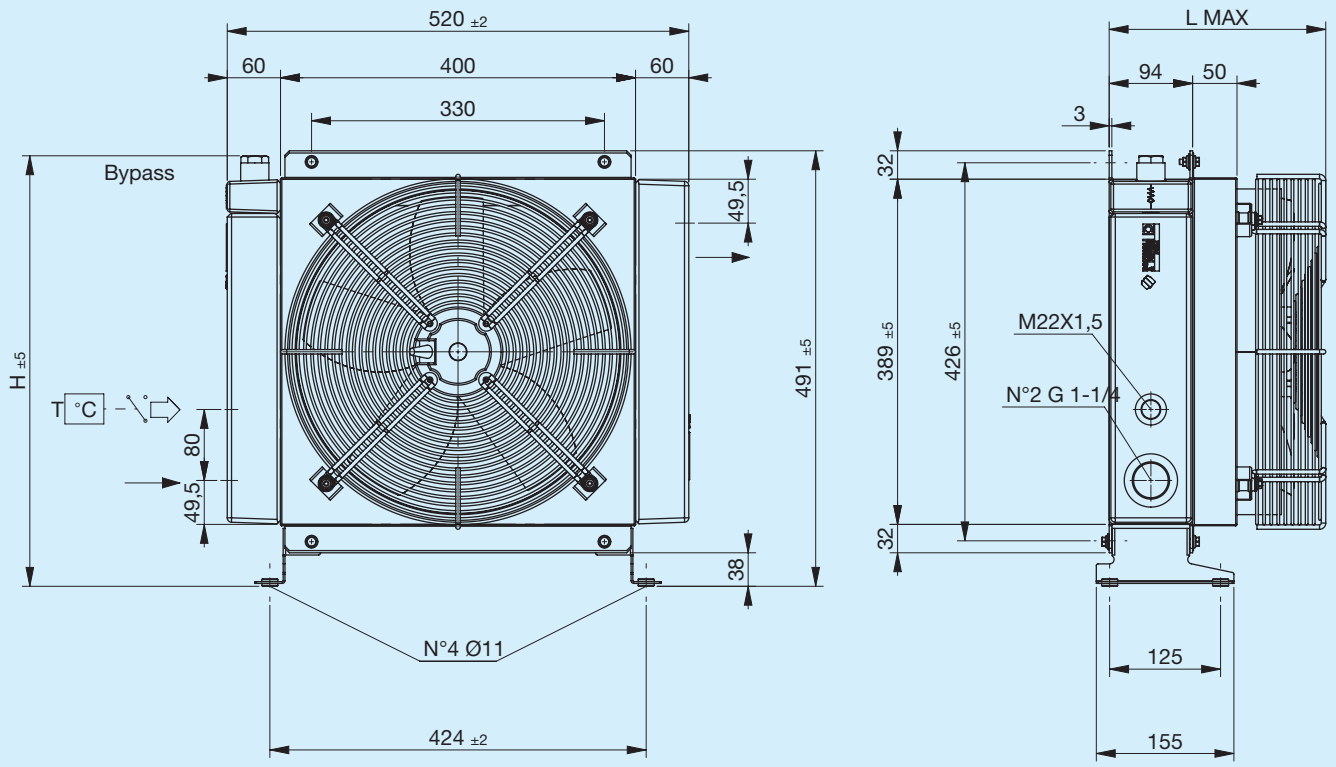

Support foot not included (see Accessories)

Code	Description	Ø Fan	Power	Frequency	Speed	Protection	L Max	H	Weight	Capacity
		mm	W	Hz	min-¹	IP	mm	mm	Kg	l
FR633223131	**A56 1EA 230V bypass T15 V.T. 3 bar 60°C**	350	180	50 60	1365 1530	44	244	485	16.2	7.5
FR633223132	**A56 1ES 230V bypass T15 V.T. 3 bar 60°C**	350	180	50 60	1365 1530	44	244	485	16.2	7.5
FR633221031	**A56 1EA 230V bypass T15 VNR 4.5 bar**	350	180	50 60	1365 1530	44	244	469	16.2	7.5
FR633221032	**A56 1ES 230V bypass T15 VNR 4.5 bar**	350	180	50 60	1365 1530	44	244	469	16.2	7.5
FR633223121	**A56 1EA 400V bypass T15 V.T. 3 bar 60°C**	350	185	50 60	1420 1620	44	244	485	16.2	7.5
FR633223122	**A56 1ES 400V bypass T15 V.T. 3 bar 60°C**	350	185	50 60	1420 1620	44	244	485	16.2	7.5
FR633221021	**A56 1EA 400V bypass T15 VNR 4.5 bar**	350	185	50 60	1420 1620	44	244	469	16.2	7.5
FR633221022	**A56 1ES 400V bypass T15 VNR 4.5 bar**	350	185	50 60	1420 1620	44	244	469	16.2	7.5
FR633220031	**A56 1EA 230V**	350	180	50 60	1365 1530	44	244	493	16.2	7.5
FR633220032	**A56 1ES 230V**	350	180	50 60	1365 1530	44	244	493	16.2	7.5
FR633220021	**A56 1EA 400V**	350	185	50 60	1420 1620	44	244	493	16.2	7.5
FR633220022	**A56 1ES 400V**	350	185	50 60	1420 1620	44	244	493	16.2	7.5

Heat exchange (thermal) capacity

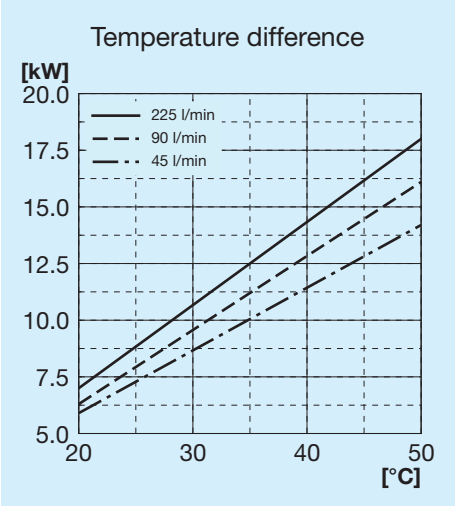

Radiator passage pressure drop

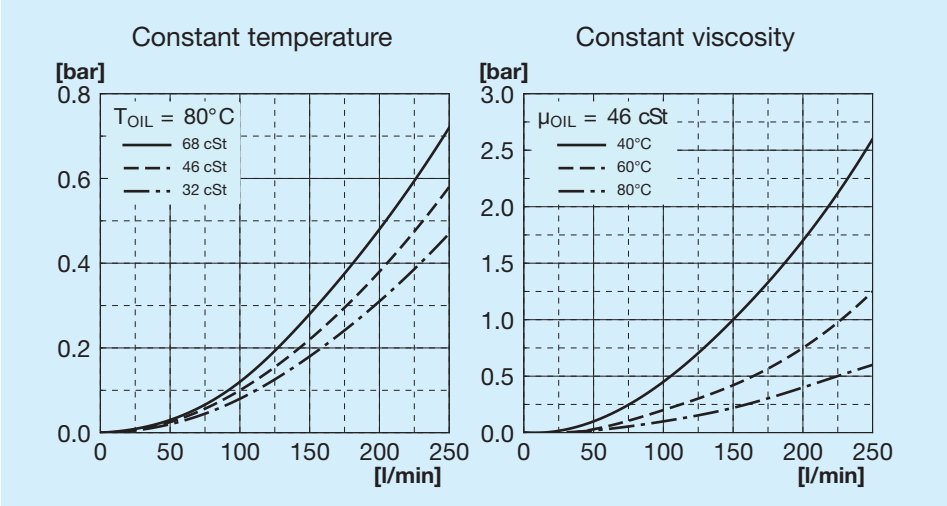

Bypass passage load loss

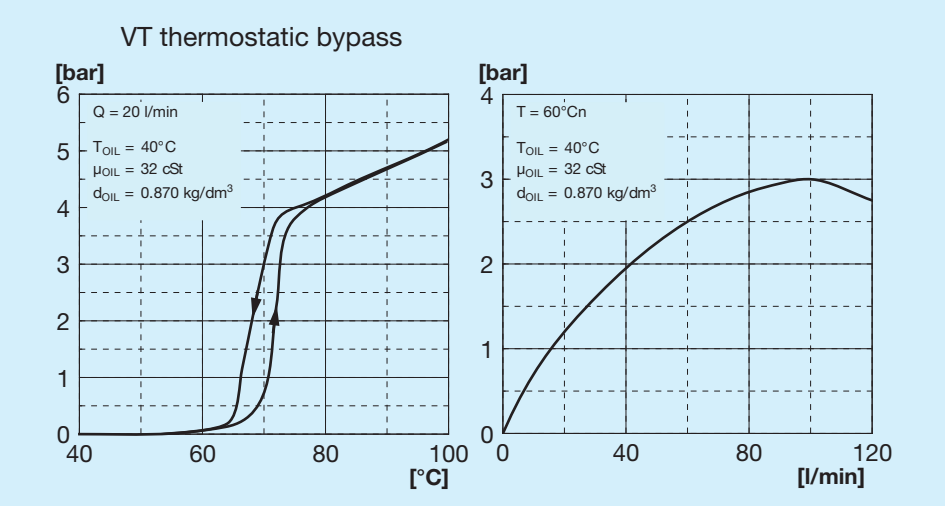

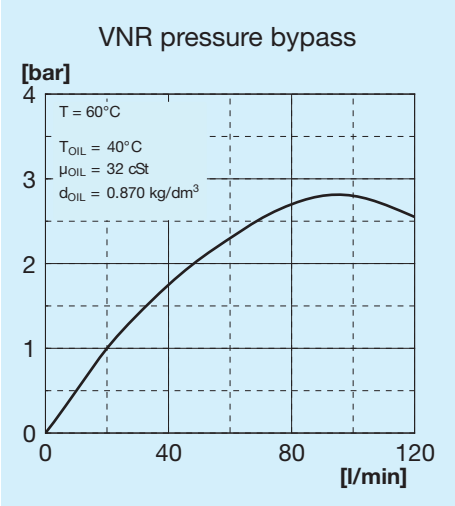

Bypass valves

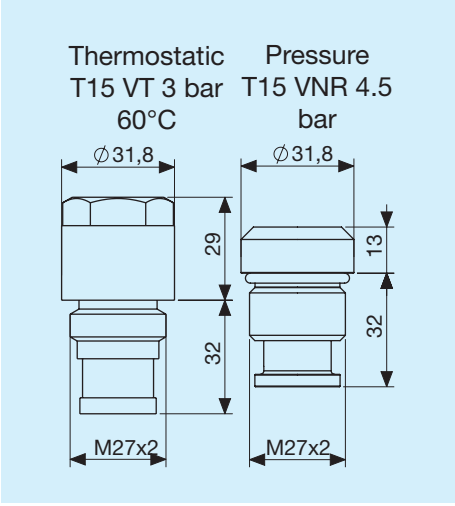

Legend

A56	Exchanger type
1E	1 Fan unit
A	Aspirating
S	Blowing
230V	Fan unit voltage
400V	Fan unit voltage
T15 VT	Thermostatic bypass valve 3 bar 60°C
T15 VNR	Pressure bypass valve at 4.5 bar

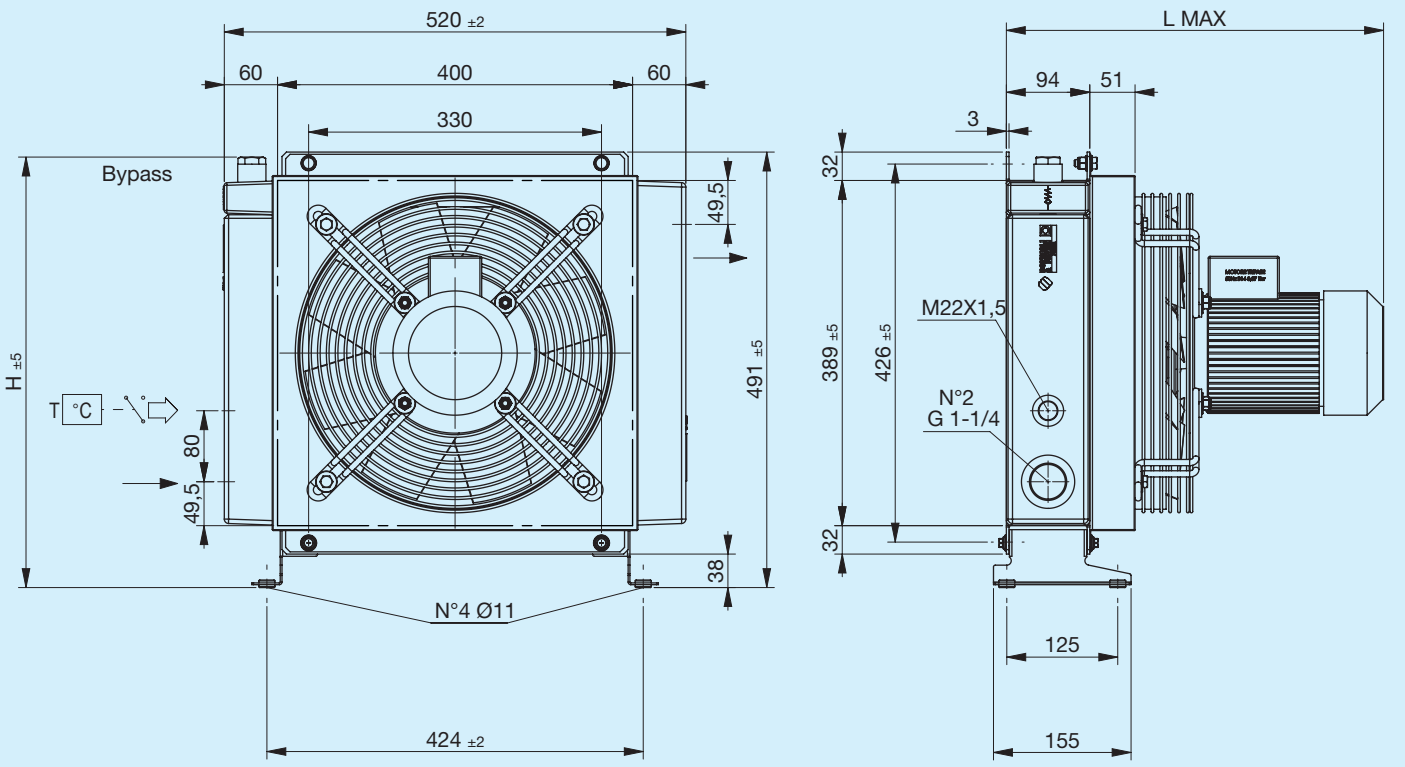

Support foot not included (see Accessories)

Code	Description	Ø Fan	Power	Frequency	Speed	Protection	L Max	H	Weight	Capacity
		mm	W	Hz	min-¹	IP	mm	mm	Kg	l
FR633223141	**A56 1EA 230V-B14 bypass T15 V.T. 3 bar 60°C**	340	370	50	1390	65	425	485	25.2	7.5
FR633223142	**A56 1ES 230V-B14 bypass T15 V.T. 3 bar 60°C**	340	370	50	1390	65	425	485	25.2	7.5
FR633221041	**A56 1EA 230V-B14 bypass T15 VNR 4.5 bar**	340	370	50	1390	65	425	469	25.2	7.5
FR633221042	**A56 1ES 230V-B14 bypass T15 VNR 4.5 bar**	340	370	50	1390	65	425	469	25.2	7.5
FR633223151	**A56 1EA 400V-B14 bypass T15 V.T. 3 bar 60°C**	340	370	50	1390	65	425	485	25.2	7.5
FR633223152	**A56 1ES 400V-B14 bypass T15 V.T. 3 bar 60°C**	340	370	50	1390	65	425	485	25.2	7.5
FR633221051	**A56 1EA 400V-B14 bypass T15 VNR 4.5 bar**	340	370	50	1390	65	425	469	25.2	7.5
FR633221052	**A56 1ES 400V-B14 bypass T15 VNR 4.5 bar**	340	370	50	1390	65	425	469	25.2	7.5
FR633220041	**A56 1EA 230V-B14**	340	370	50	1390	65	425	492	25.2	7.5
FR633220042	**A56 1ES 230V-B14**	340	370	50	1390	65	425	492	25.2	7.5
FR633220051	**A56 1EA 400V-B14**	340	370	50	1390	65	425	492	25.2	7.5
FR633220052	**A56 1ES 400V-B14**	340	370	50	1390	65	425	492	25.2	7.5

Heat exchange (thermal) capacity

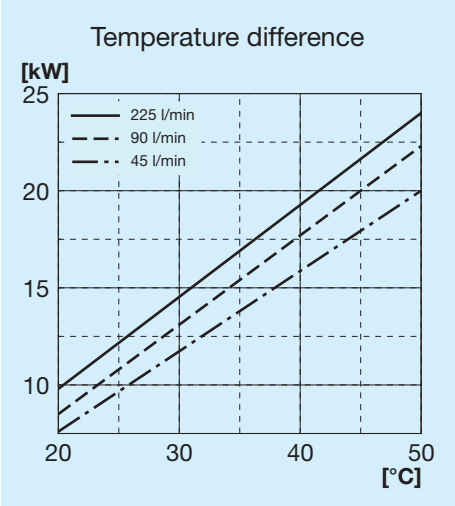

Radiator passage pressure drop

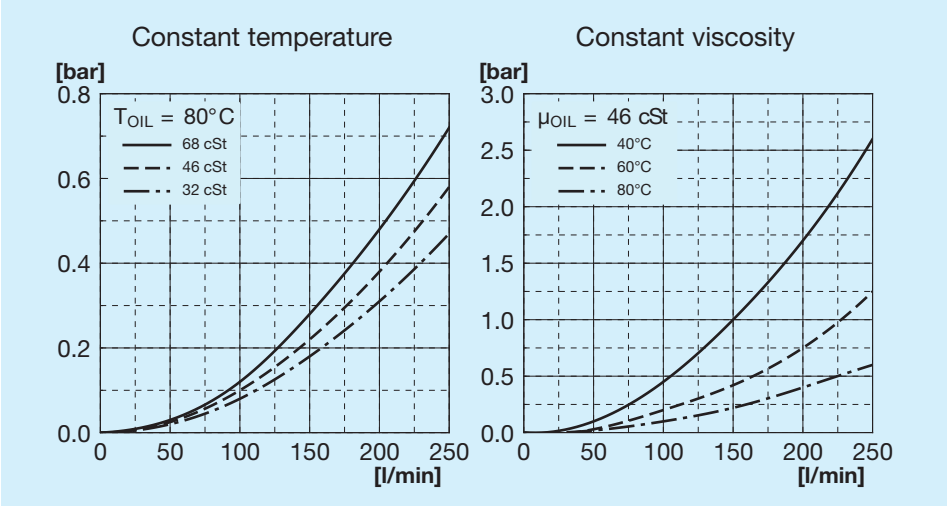

Bypass passage load loss

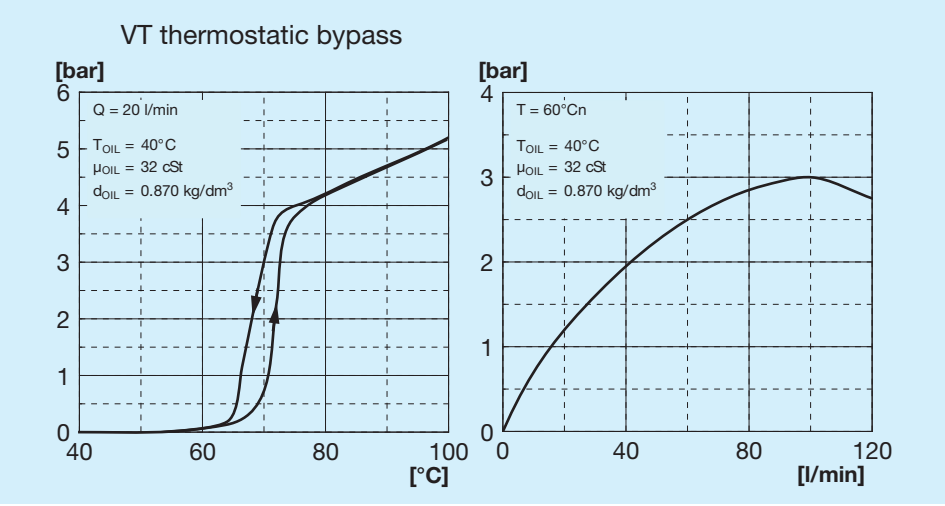

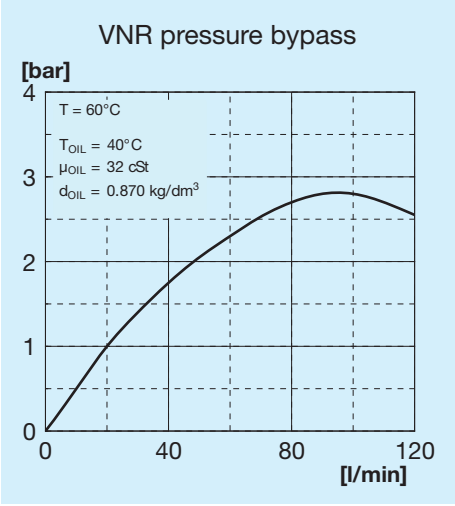

Bypass valves

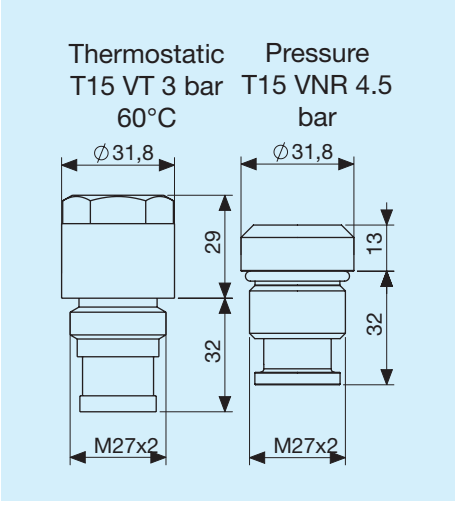

Legend

A56	Exchanger type
1E	1 Fan unit
A	Aspirating
S	Blowing
230V B14	Fan unit voltage
400V B14	Fan unit voltage
T15 VT	Thermostatic bypass valve 3 bar 60°C
T15 VNR	Pressure bypass valve at 4.5 bar

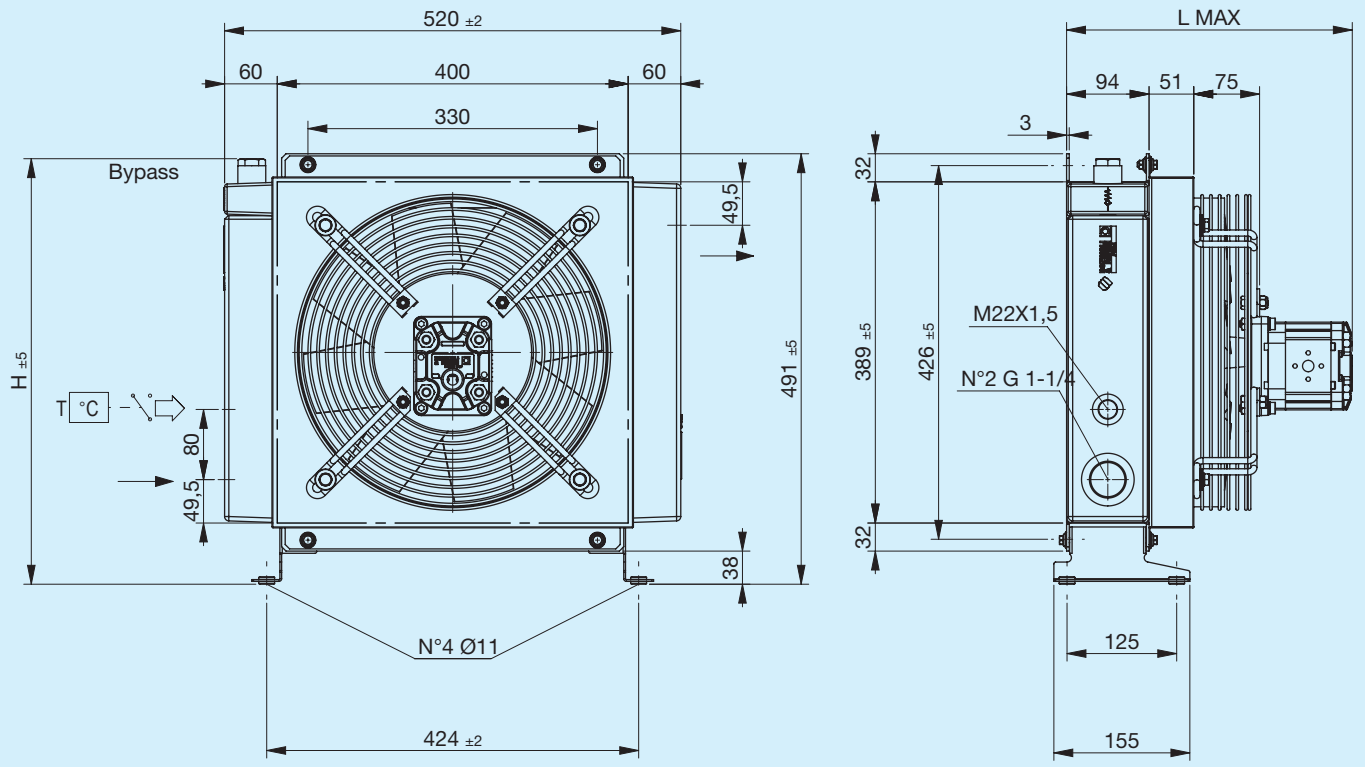

Support foot not included (see Accessories)

Code	Description	Ø Fan mm	Cylindrée du moteur cm3	L Max mm	H mm	Weight Kg	Capacity l
FR634223101	A56 IA SETT.GR2 bypass T15 V.T. 3 bar 60°C	340	_	260	485	18	7.5
FR634223102	A56 IS SETT.GR2 bypass T15 V.T. 3 bar 60°C	340	_	260	485	18	7.5
FR634221001	A56 IA SETT.GR2 bypass T15 VNR 4.5 bar	340	_	260	469	18	7.5
FR634221002	A56 IS SETT.GR2 bypass T15 VNR 4.5 bar	340	_	260	469	18	7.5
FR634223103	A56 IA HYDR.MOT. GR2 bypass T15 V.T. 3 bar 60°C	340	6	320	485	19	7.5
FR634223104	A56 IS HYDR.MOT. GR2 bypass T15 V.T. 3 bar 60°C	340	6	320	485	19	7.5
FR634221003	A56 IA HYDR.MOT. GR2 bypass T15 VNR 4.5 bar	340	6	320	469	19	7.5
FR634221004	A56 IS HYDR.MOT. GR2 bypass T15 VNR 4.5 bar	340	6	320	469	19	7.5
FR634220001	A56 IA SETT.GR2	340	_	260	492	18	7.5
FR634220002	A56 IS SETT.GR2	340	_	260	492	18	7.5
FR634220003	A56 IA HYDR.MOT. GR2	340	6	320	492	19	7.5
FR634220004	A56 IS HYDR.MOT. GR2	340	6	320	492	19	7.5

Heat exchange (thermal) capacity

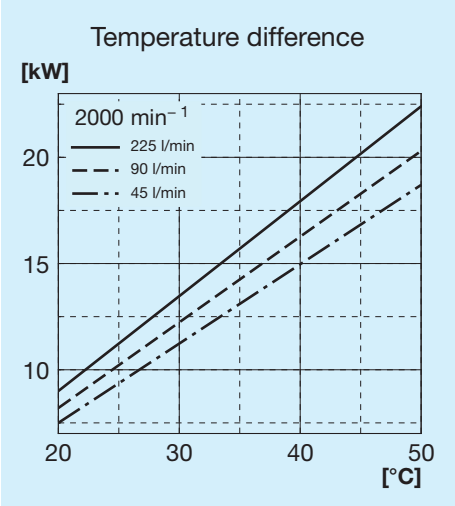

Radiator passage pressure drop

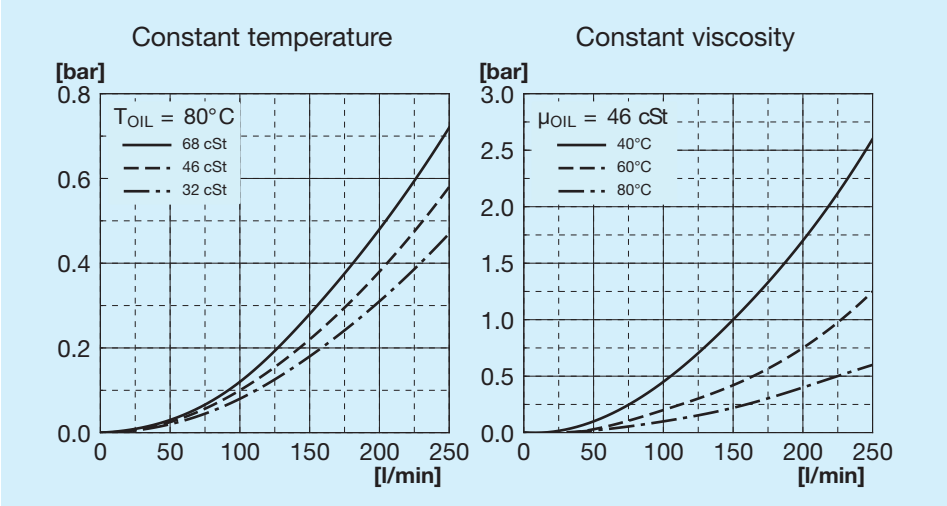

Bypass passage load loss

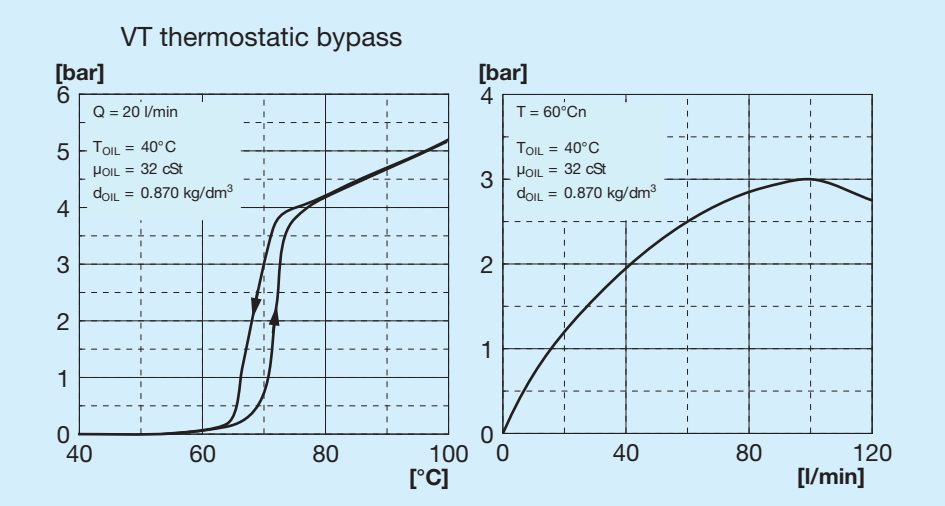

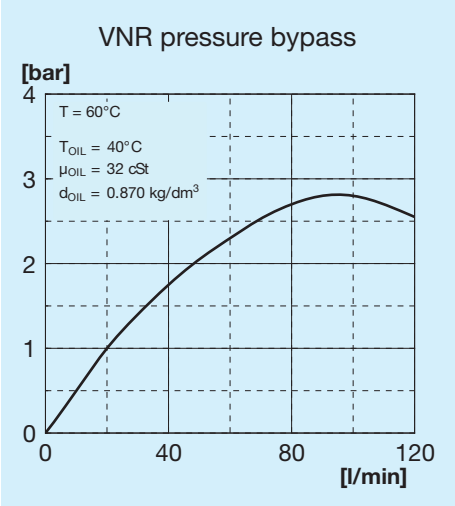

Bypass valves

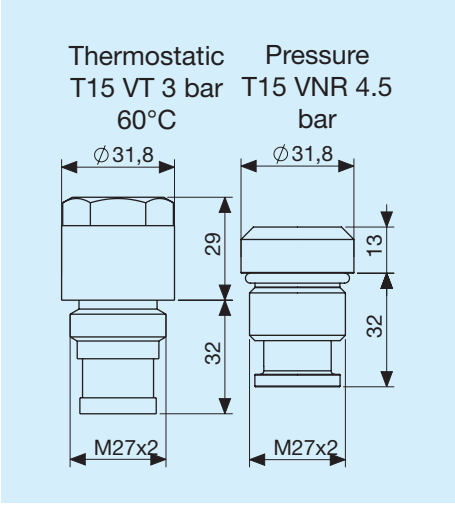

Legend

A56	Exchanger type
IA	Hydraulic aspirating
IS	Hydraulic blowing
SETT.	With motor mounting
HYD. MOT.	With integrated motor mounting
GR1	Group 1
GR2	Group 2
T15 VT	Thermostatic bypass valve 3 bar 60°C
T15 VNR	Pressure bypass valve at 4.5 bar

Left supporting foot

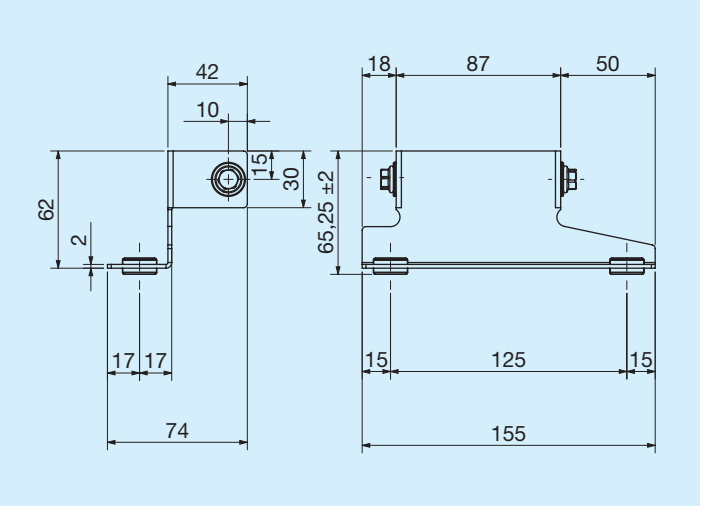

	Code
Left supporting foot	FR290000023R

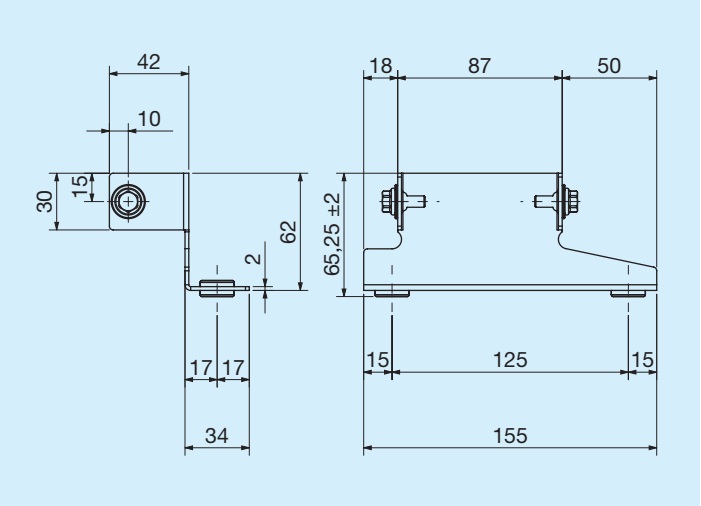

	Code
Right supporting foot	FR290000024R

Thermostats

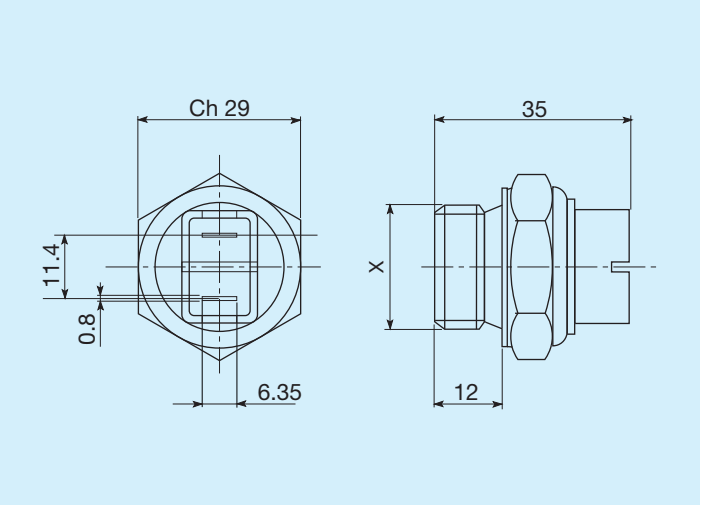

Trigger temperature C°	Threading	Code
45 - 35	M22x1.5	FR361104535R
60 - 50	M22x1.5	FR361106050R
80 - 70	M22x1.5	FR361108070R
82 - 68	M22x1.5	FR361108268R
85 - 76	M22x1.5	FR361108576R

IP54 protected thermal switch

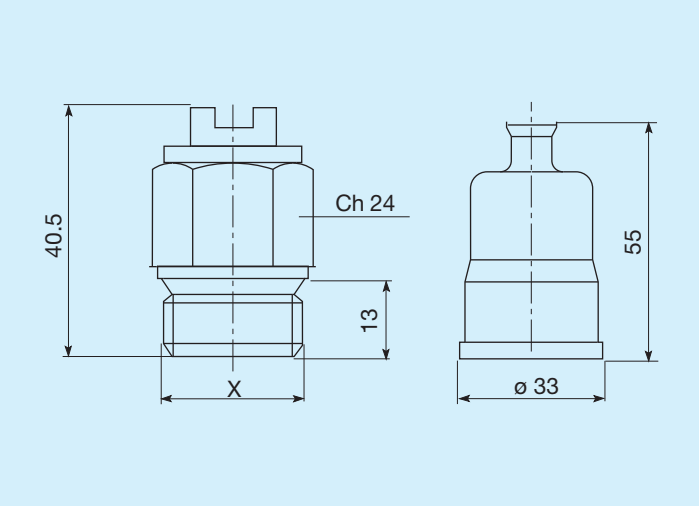

Trigger temperature C°	Threading	Code
45 - 35	M22x1.5	FR361124535R
50 - 40	M22x1.5	FR361125040R
60 - 50	M22x1.5	FR361126050R
70 - 60	M22x1.5	FR361127060R
80 -70	M22x1.5	FR361128070R

IP65 protected thermal switch

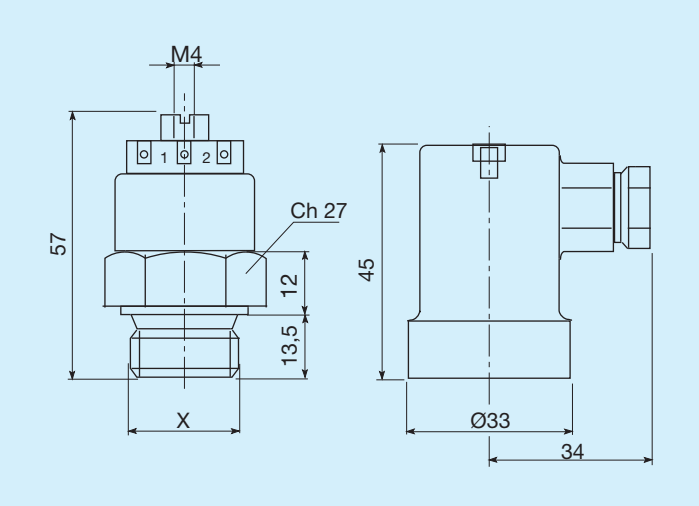

Trigger temperature C°	Threading	Code
45 - 35	M22x1.5	FR361154535R
47 - 36	M22x1.5	FR361155040R
60 - 50	M22x1.5	FR361176050R
80 - 70	M22x1.5	FR361158070R