A65

Before using the heat exchanger, carefully read the document entitled GENERAL INSTRUCTIONS FOR HEAT EXCHANGER USE.

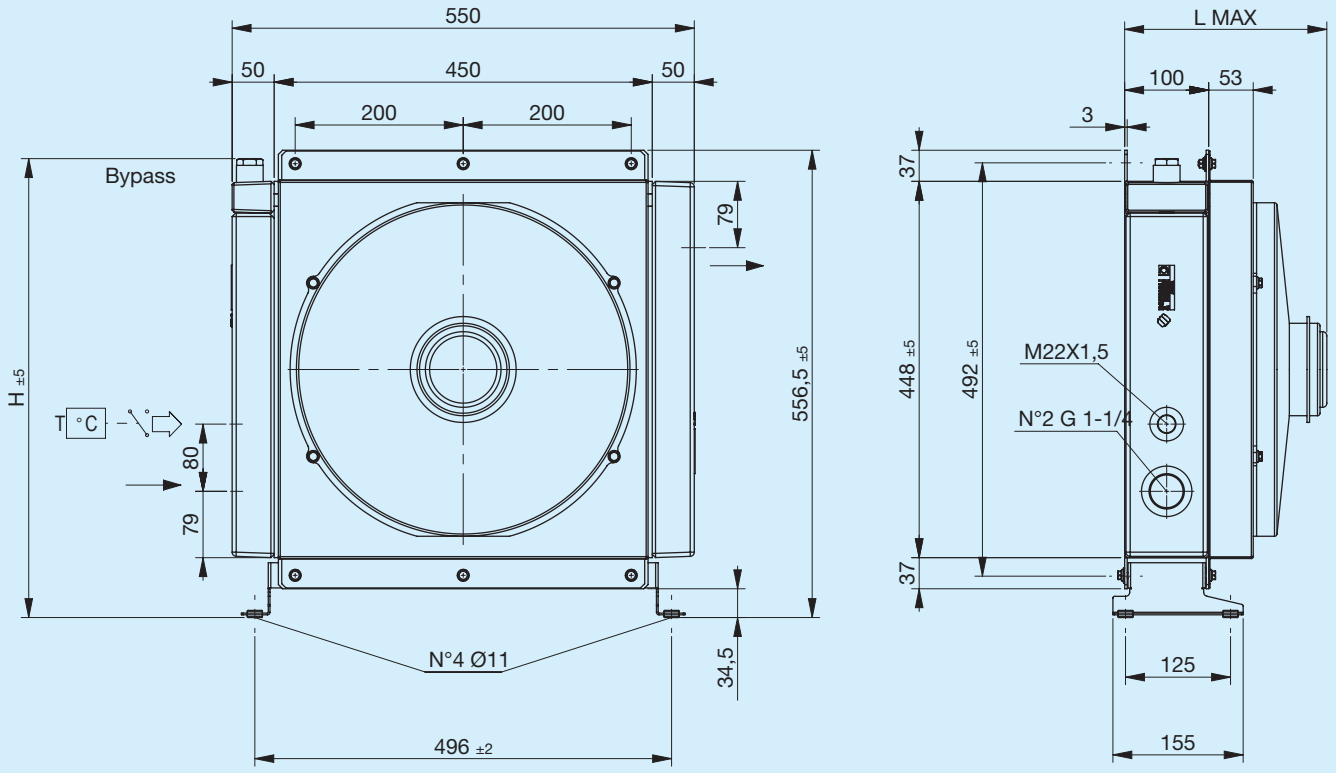

Support foot not included (see Accessories)

Code	Description	Ø Fan	Air flow rate	Voltage	Current	L Max	H	Weight	Capacity
		mm	m³/h	V	A	mm	mm	Kg	l
FR633123101	**A65 1EAX 12V bypass T15 V.T. 3 bar 60°C**	385	2850	12	19,7	240	546	20	8.5
FR633123102	**A65 1ESX 12V bypass T15 V.T. 3 bar 60°C**	385	3070	12	18,7	240	546	20	8.5
FR633121001	**A65 1EAX 12V bypass T15 VNR 4.5 bar**	385	2850	12	19,7	240	530	20	8.5
FR633121002	**A65 1ESX 12V bypass T15 VNR 4.5 bar**	385	3070	12	18,7	240	530	20	8.5
FR633123113	**A65 1EAX 24V bypass T15 V.T. 3 bar 60°C**	385	3070	24	10	240	546	20	8.5
FR633123114	**A65 1ESX 24V bypass T15 V.T. 3 bar 60°C**	385	3180	24	9,4	240	546	20	8.5
FR633121013	**A65 1EAX 24V bypass T15 VNR 4.5 bar**	385	3070	24	10	240	530	20	8.5
FR633121014	**A65 1ESX 24V bypass T15 VNR 4.5 bar**	385	3180	24	9,4	240	530	20	8.5
FR633120001	**A65 1EAX 12V**	385	2850	12	19,7	240	556.5	20	8.5
FR633120002	**A65 1ESX 12V**	385	3070	12	18,7	240	556.5	20	8.5
FR633120013	**A65 1EAX 24V**	385	3070	24	10	240	556.5	20	8.5
FR633120014	**A65 1ESX 24V**	385	3180	24	9,4	240	556.5	20	8.5

Characteristic curves

Heat exchange (thermal) capacity

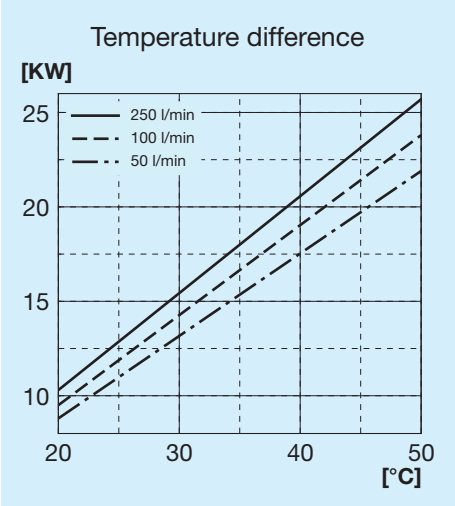

Radiator passage pressure drop

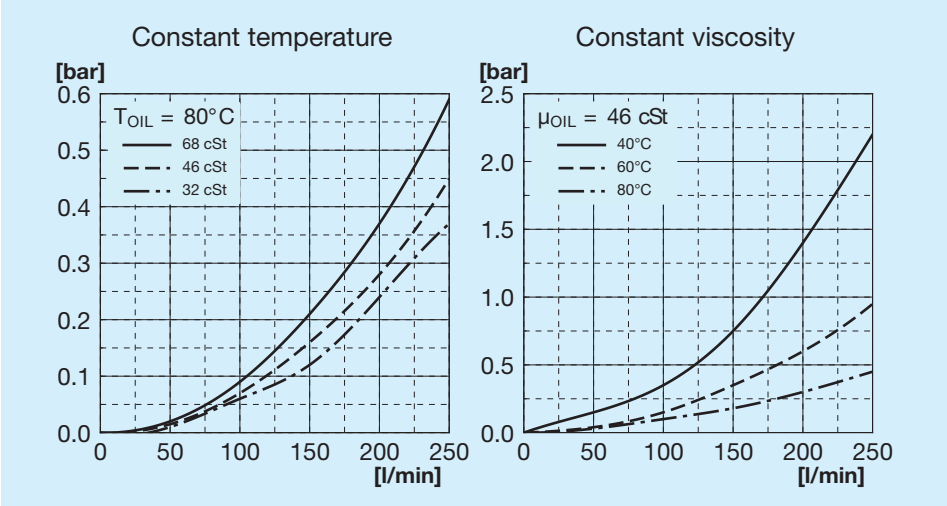

Bypass passage load loss

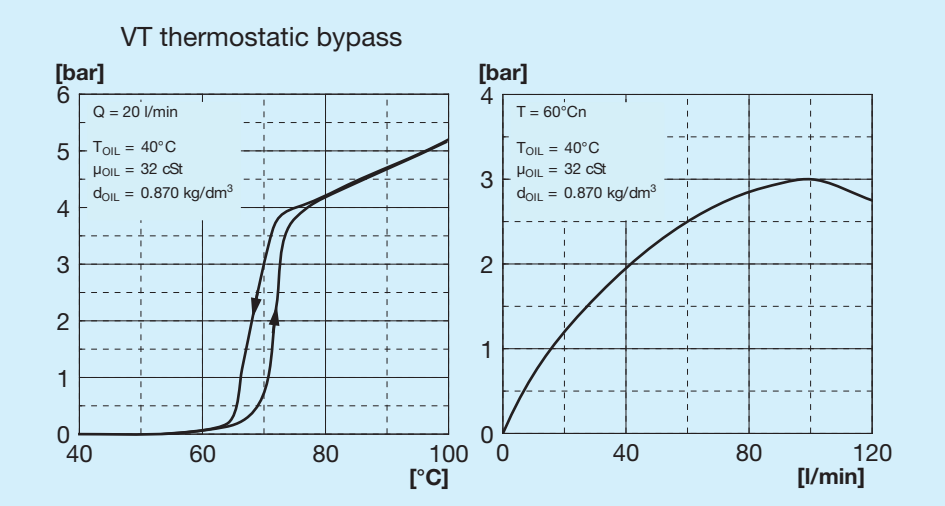

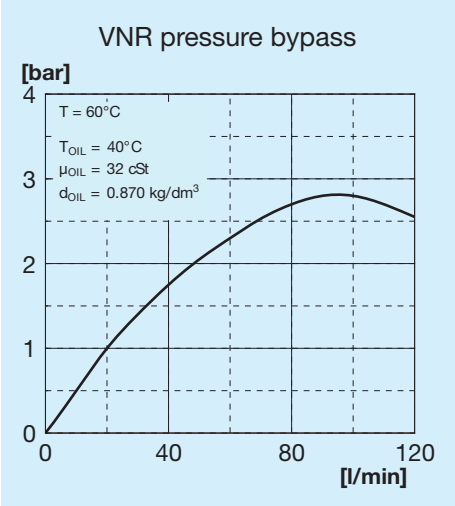

Bypass valves

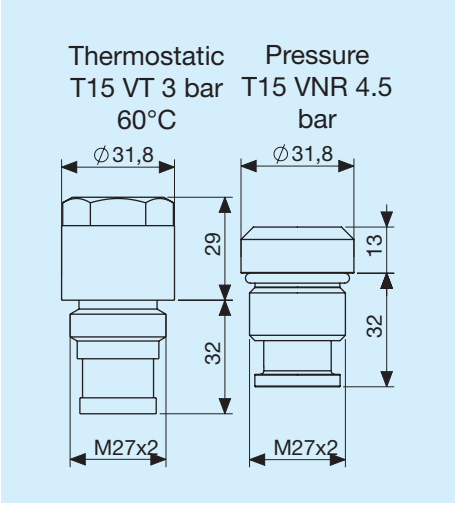

Legend

A65	Exchanger type
1E	1 Fan unit
A	Aspirating
S	Blowing
AP	High power aspirating
SP	High power blower
AX	Extra high power aspirating
SX	Extra high power blower
12V	Fan unit voltage
24V	Fan unit voltage
T15 VT	Thermostatic bypass valve 3 bar 60°C
T15 VNR	Pressure bypass valve at 4.5 bar

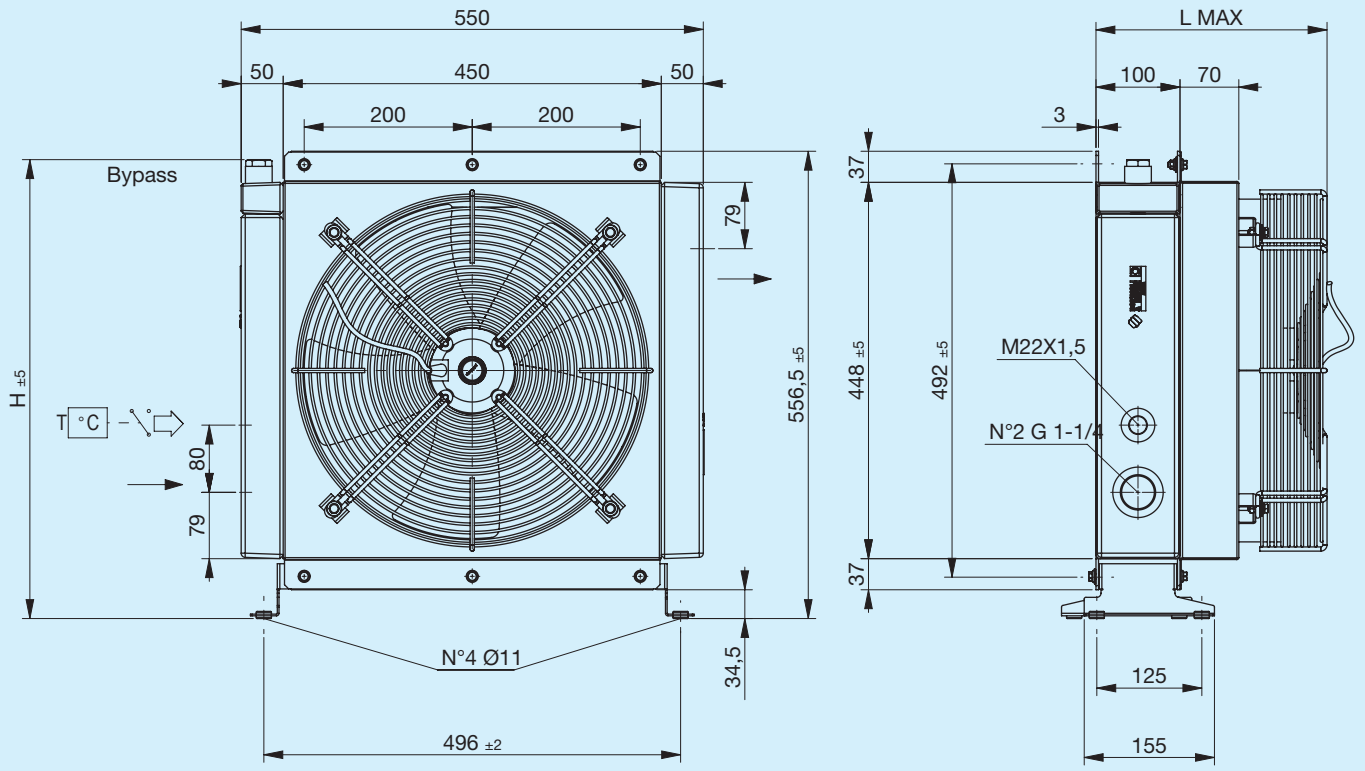

Support foot not included (see Accessories)

Code	Description	Ø Fan	Power	Frequency	Speed	Protection	L Max	H	Weight	Capacity
		mm	W	Hz	min-¹	IP	mm	mm	Kg	l
FR633123131	**A65 1EA 230V bypass T15 V.T. 3 bar 60°C**	400	240	50 60	1430 1700	44	275	546	21.5	8.5
FR633123132	**A65 1ES 230V bypass T15 V.T. 3 bar 60°C**	400	240	50 60	1430 1700	44	275	546	21.5	8.5
FR633121031	**A65 1EA 230V bypass T15 VNR 4.5 bar**	400	240	50 60	1430 1700	44	275	530	21.5	8.5
FR633121032	**A65 1ES 230V bypass T15 VNR 4.5 bar**	400	240	50 60	1430 1700	44	275	530	21.5	8.5
FR633123121	**A65 1EA 400V bypass T15 V.T. 3 bar 60°C**	400	185	50 60	1450 1690	44	275	546	21.5	8.5
FR633123122	**A65 1ES 400V bypass T15 V.T. 3 bar 60°C**	400	185	50 60	1450 1690	44	275	546	21.5	8.5
FR633121021	**A65 1EA 400V bypass T15 VNR 4.5 bar**	400	185	50 60	1450 1690	44	275	530	21.5	8.5
FR633121022	**A65 1ES 400V bypass T15 VNR 4.5 bar**	400	185	50 60	1450 1690	44	275	530	21.5	8.5
FR633120031	**A65 1EA 230V**	400	240	50 60	1430 1700	44	275	556	21.5	8.5
FR633120032	**A65 1ES 230V**	400	240	50 60	1430 1700	44	275	556	21.5	8.5
FR633120021	**A65 1EA 400V**	400	185	50 60	1450 1690	44	275	556	21.5	8.5
FR633120022	**A65 1ES 400V**	400	185	50 60	1450 1690	44	275	556	21.5	8.5

Heat exchange (thermal) capacity

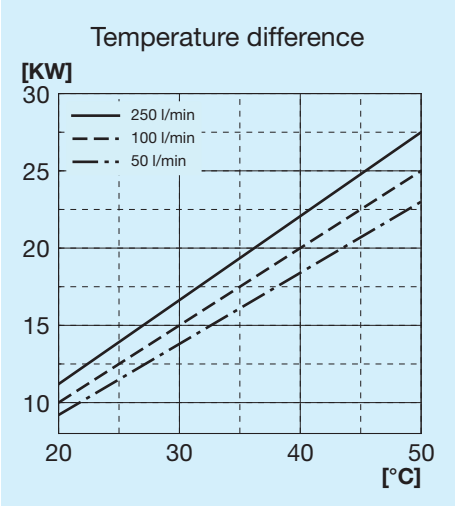

Radiator passage pressure drop

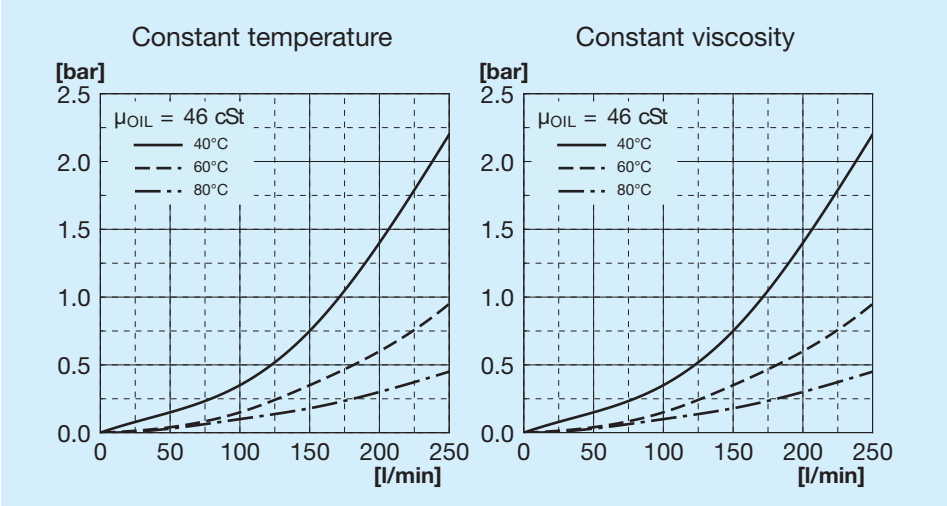

Bypass passage load loss

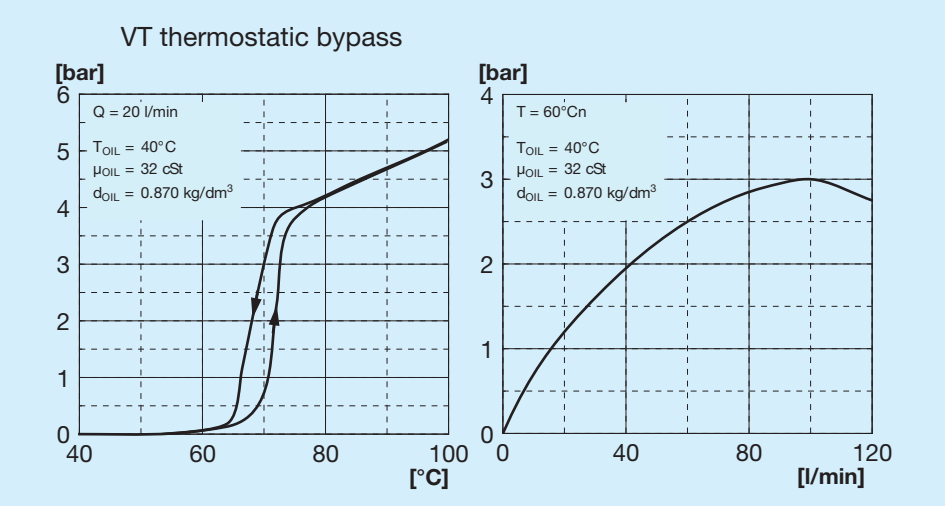

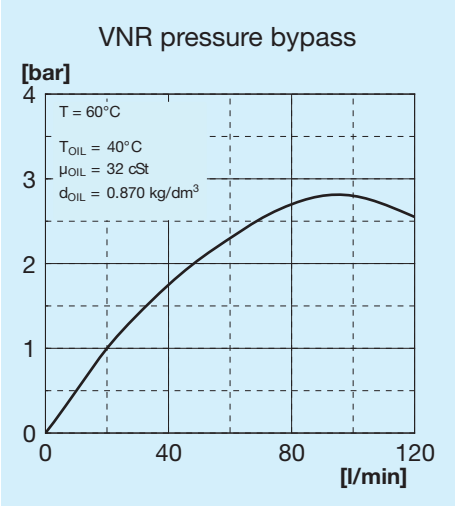

Bypass valves

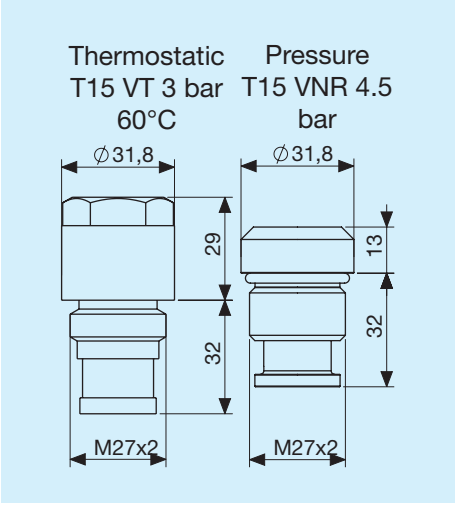

Legend

A65	Exchanger type
1E	1 Fan unit
A	Aspirating
S	Blowing
230V	Fan unit voltage
400V	Fan unit voltage
T15 VT	Thermostatic bypass valve 3 bar 60°C
T15 VNR	Pressure bypass valve at 4.5 bar

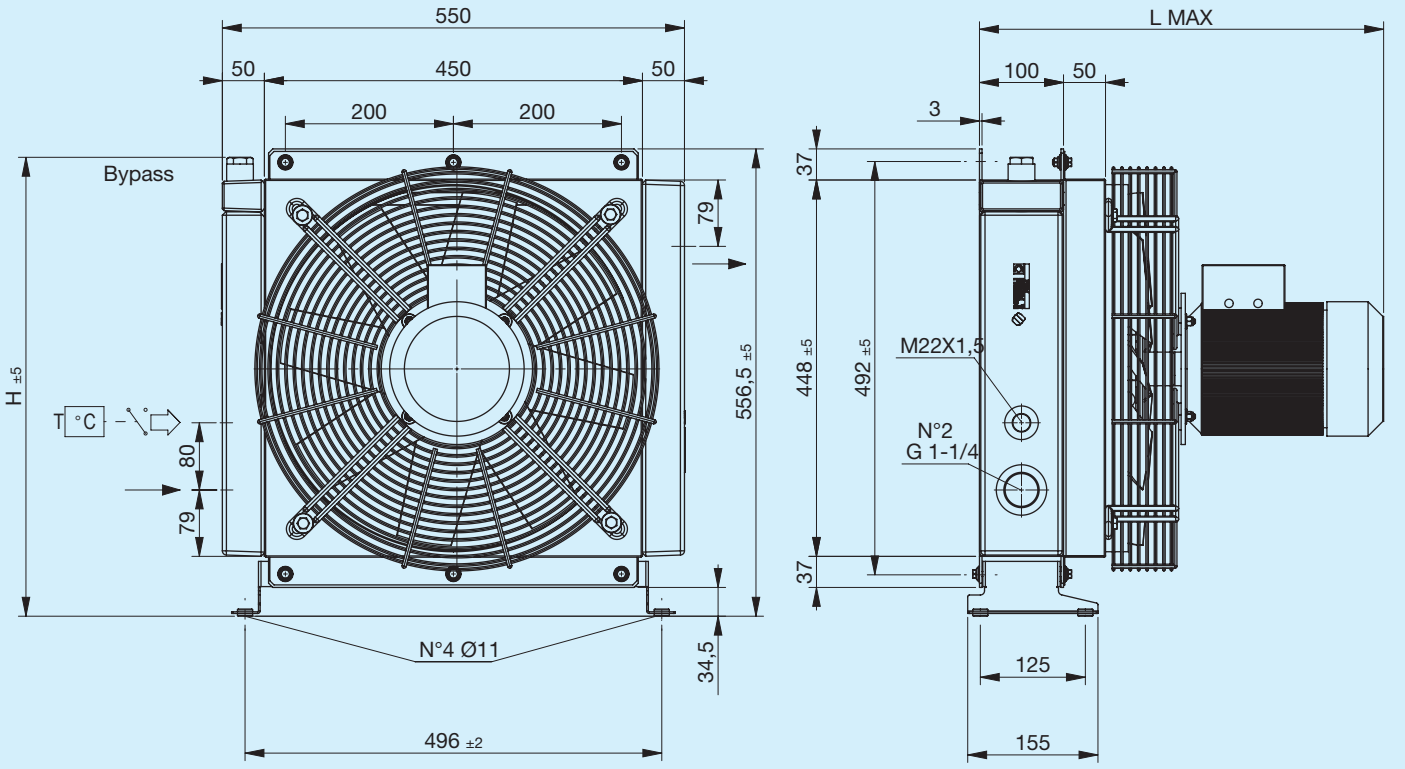

Support foot not included (see Accessories)

Code	Description	Ø Fan	Power	Frequency	Speed	Protection	L Max	H	Weight	Capacity
		mm	W	Hz	min-¹	IP	mm	mm	Kg	l
FR633123141	**A65 1EA 230V-B14 bypass T15 V.T. 3 bar 60°C**	420	750	50	1390	65	481	546	30	8.5
FR633123142	**A65 1ES 230V-B14 bypass T15 V.T. 3 bar 60°C**	420	750	50	1390	65	481	546	30	8.5
FR633121041	**A65 1EA 230V-B14 bypass T15 VNR 4.5 bar**	420	750	50	1390	65	481	530	30	8.5
FR633121042	**A65 1ES 230V-B14 bypass T15 VNR 4.5 bar**	420	750	50	1390	65	481	530	30	8.5
FR633123151	**A65 1EA 400V-B14 bypass T15 V.T. 3 bar 60°C**	420	750	50	1390	65	481	546	30	8.5
FR633123152	**A65 1ES 400V-B14 bypass T15 V.T. 3 bar 60°C**	420	750	50	1390	65	481	546	30	8.5
FR633121051	**A65 1EA 400V-B14 bypass T15 VNR 4.5 bar**	420	750	50	1390	65	481	530	30	8.5
FR633121052	**A65 1ES 400V-B14 bypass T15 VNR 4.5 bar**	420	750	50	1390	65	481	530	30	8.5
FR633120041	**A65 1EA 230V-B14**	420	750	50	1390	65	481	556	30	8.5
FR633120042	**A65 1ES 230V-B14**	420	750	50	1390	65	481	556	30	8.5
FR633120051	**A65 1EA 400V-B14**	420	750	50	1390	65	481	556	30	8.5
FR633120052	**A65 1ES 400V-B14**	420	750	50	1390	65	481	556	30	8.5

Heat exchange (thermal) capacity

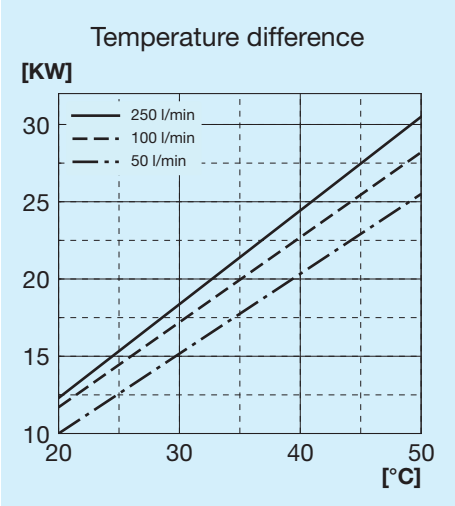

Radiator passage pressure drop

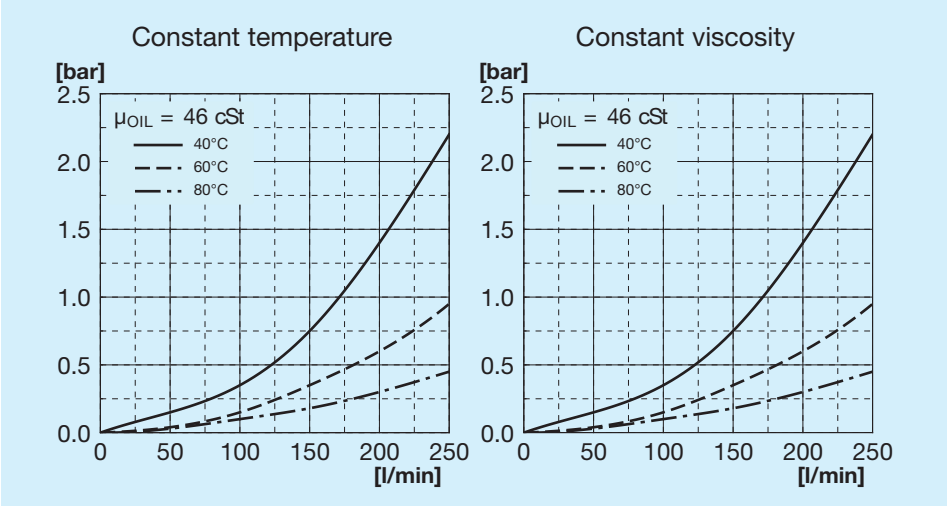

Bypass passage load loss

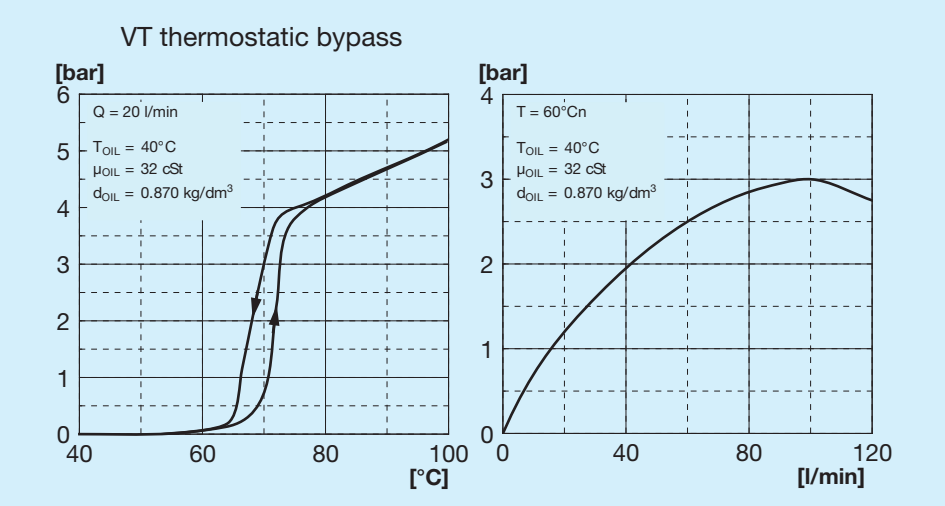

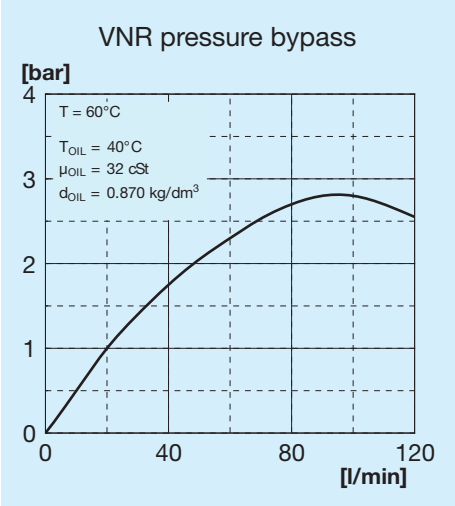

Bypass valves

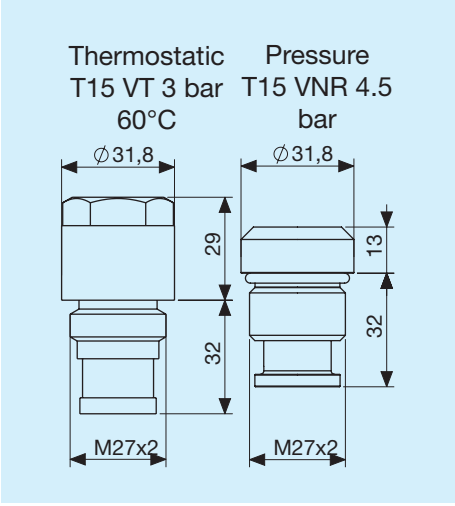

Legend

A65	Exchanger type
1E	1 Fan unit
A	Aspirating
S	Blowing
230V B14	Fan unit voltage
400V B14	Fan unit voltage
T15 VT	Thermostatic bypass valve 3 bar 60°C
T15 VNR	Pressure bypass valve at 4.5 bar

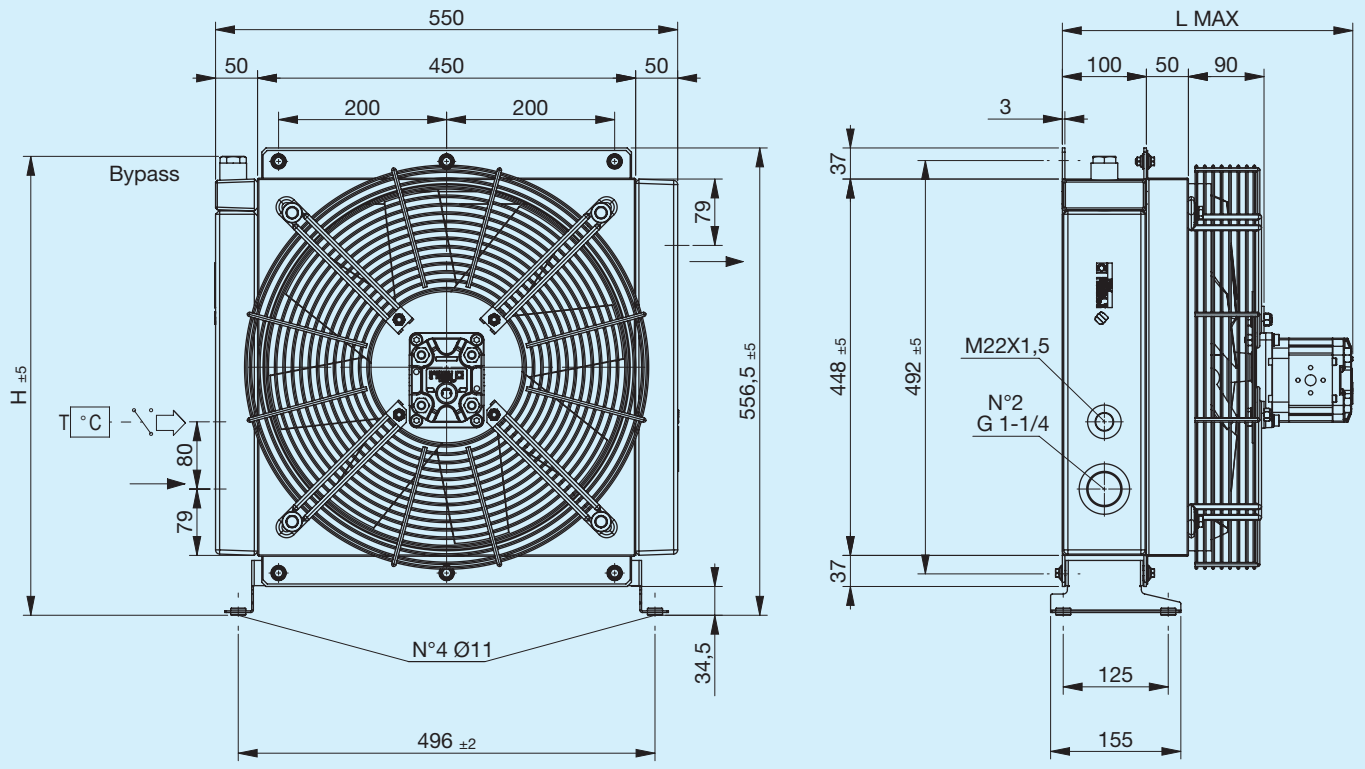

Support foot not included (see Accessories)

Code	Description	Ø Fan mm	Motor displacement cm3	L Max mm	H mm	Weight Kg	Capacity l
FR634123104	**A65 IA SETT.GR2 bypass T15 V.T. 3 bar 60°C**	420	_	285	546	23	8.5
FR634123106	**A65 IS SETT.GR2 bypass T15 V.T. 3 bar 60°C**	420	_	285	546	23	8.5
FR634121004	**A65 IA SETT.GR2 bypass T15 VNR 4.5 bar**	420	_	285	530	23	8.5
FR634121006	**A65 IS SETT.GR2 bypass T15 VNR 4.5 bar**	420	_	285	530	23	8.5
FR634123113	**A65 IA HYDR.MOT. GR2 bypass T15 V.T. 3 bar 60°C**	420	6	345	546	24	8.5
FR634123114	**A65 IS HYDR.MOT. GR2 bypass T15 V.T. 3 bar 60°C**	420	6	345	546	24	8.5
FR634121013	**A65 IA HYDR.MOT. GR2 bypass T15 VNR 4.5 bar**	420	6	345	530	24	8.5
FR634121014	**A65 IS HYDR.MOT. GR2 bypass T15 VNR 4.5 bar**	420	6	345	530	24	8.5
FR634120004	**A65 IA SETT.GR2**	420	_	285	556	23	8.5
FR634120006	**A65 IS SETT.GR2**	420	_	285	556	23	8.5
FR634120013	**A65 IA HYDR.MOT. GR2**	420	6	345	556	24	8.5
FR634120014	**A65 IS HYDR.MOT. GR2**	420	6	345	556	24	8.5

Heat exchange (thermal) capacity

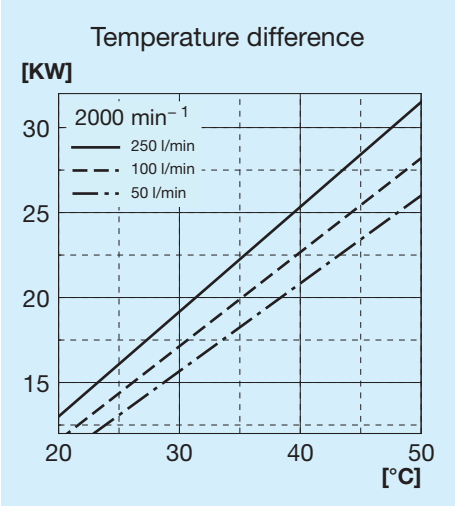

Radiator passage pressure drop

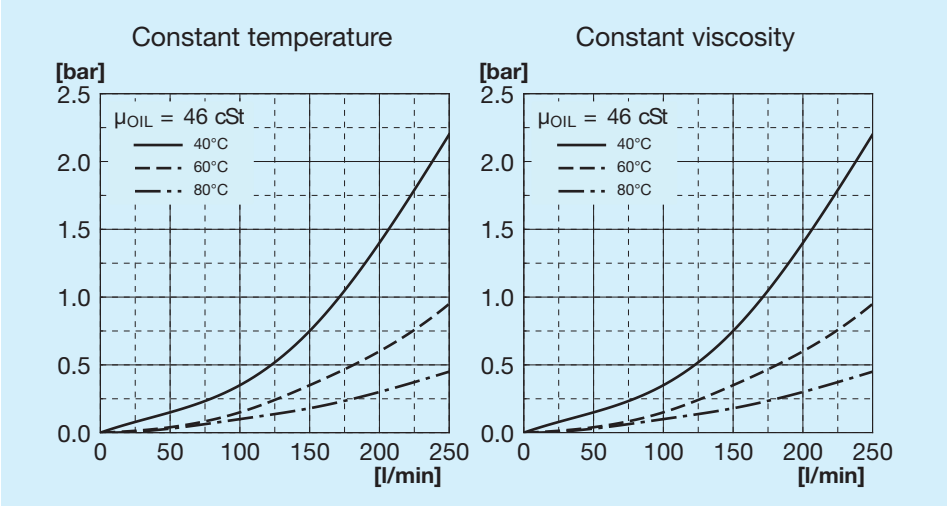

Bypass passage load loss

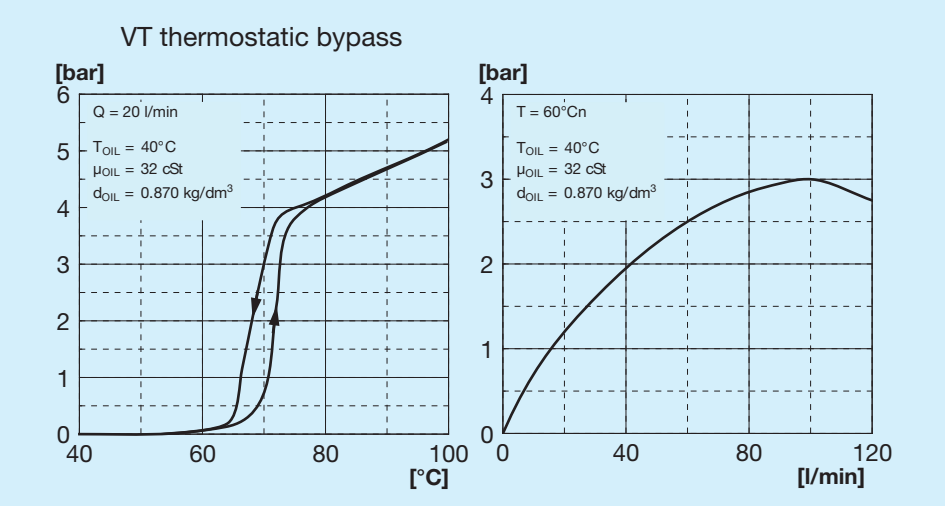

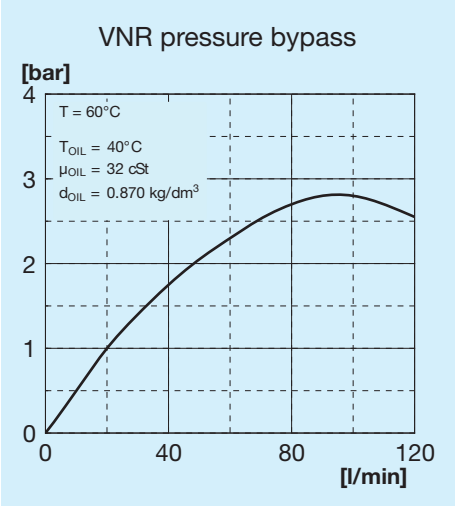

Bypass valves

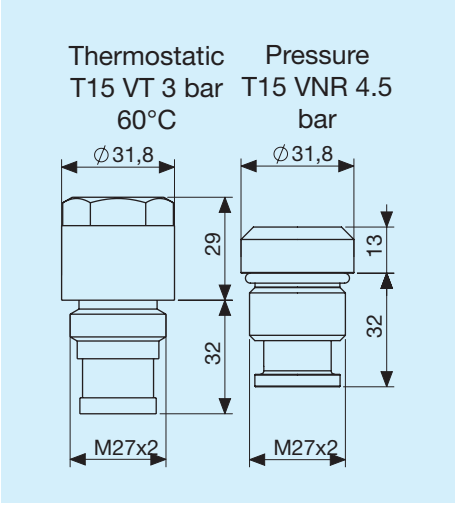

Legend

A65	Exchanger type
IA	Hydraulic aspirating
IS	Hydraulic blowing
SETT.	With motor mounting
HYD. MOT.	With integrated motor mounting
GR1	Group 1
GR2	Group 2
T15 VT	Thermostatic bypass valve 3 bar 60°C
T15 VNR	Pressure bypass valve at 4.5 bar

Left supporting foot

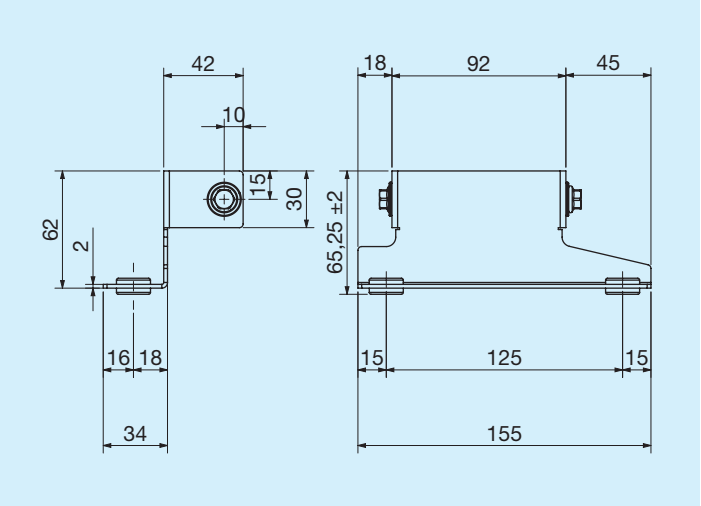

	Code
Left supporting foot	FR290000009R

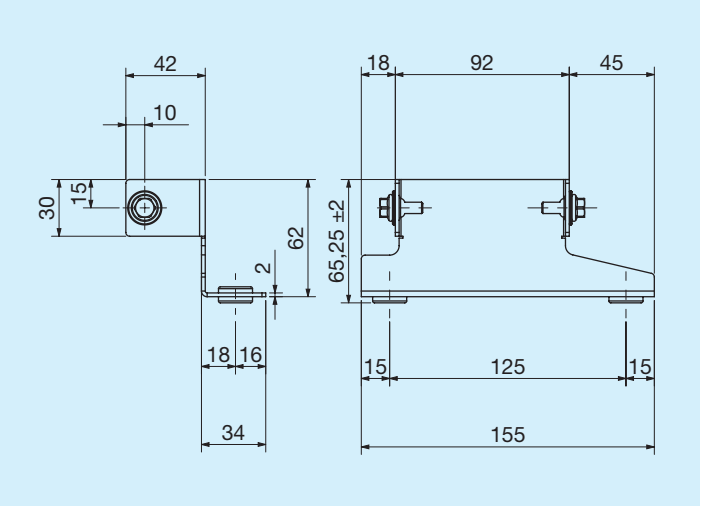

	Code
Right supporting foot	FR290000010R

Thermostats

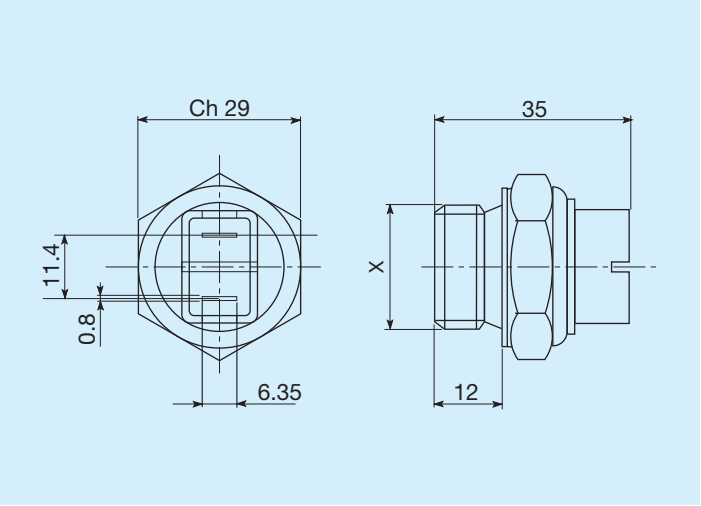

Trigger temperature C°	Threading	Code
45 - 35	M22x1.5	FR361104535R
60 - 50	M22x1.5	FR361106050R
80 - 70	M22x1.5	FR361108070R
82 - 68	M22x1.5	FR361108268R
85 - 76	M22x1.5	FR361108576R

IP54 protected thermal switch

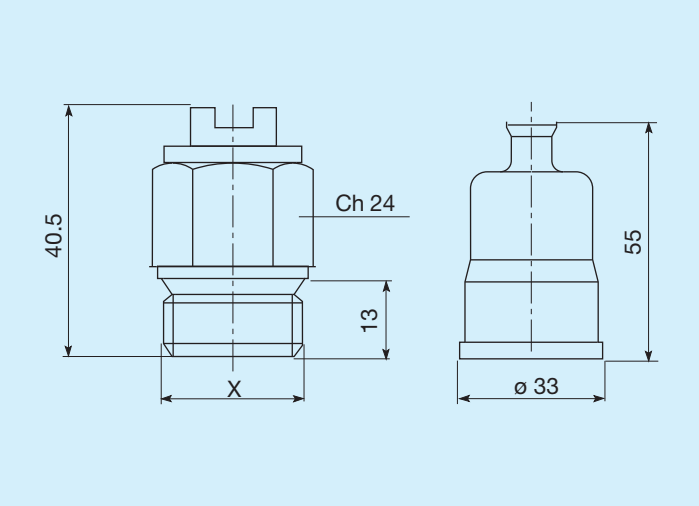

Trigger temperature C°	Threading	Code
45 - 35	M22x1.5	FR361124535R
50 - 40	M22x1.5	FR361125040R
60 - 50	M22x1.5	FR361126050R
70 - 60	M22x1.5	FR361127060R
80 -70	M22x1.5	FR361128070R

IP65 protected thermal switch

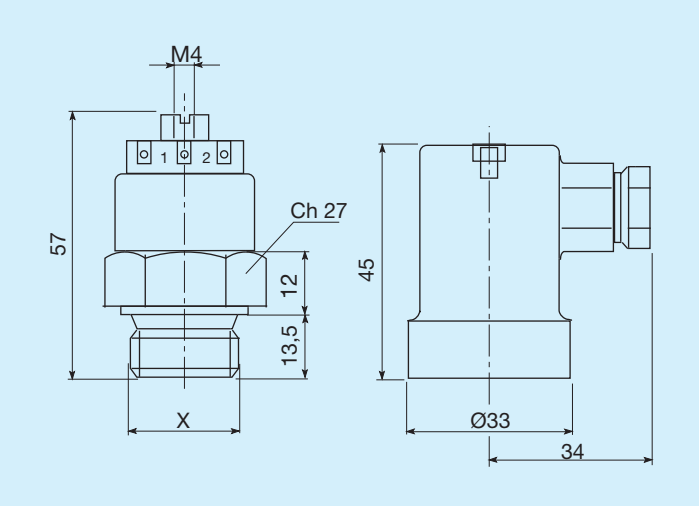

Trigger temperature C°	Threading	Code
45 - 35	M22x1.5	FR361154535R
47 - 36	M22x1.5	FR361155040R
60 - 50	M22x1.5	FR361176050R
80 - 70	M22x1.5	FR361158070R