A80

Before using the heat exchanger, carefully read the document entitled GENERAL INSTRUCTIONS FOR HEAT EXCHANGER USE.

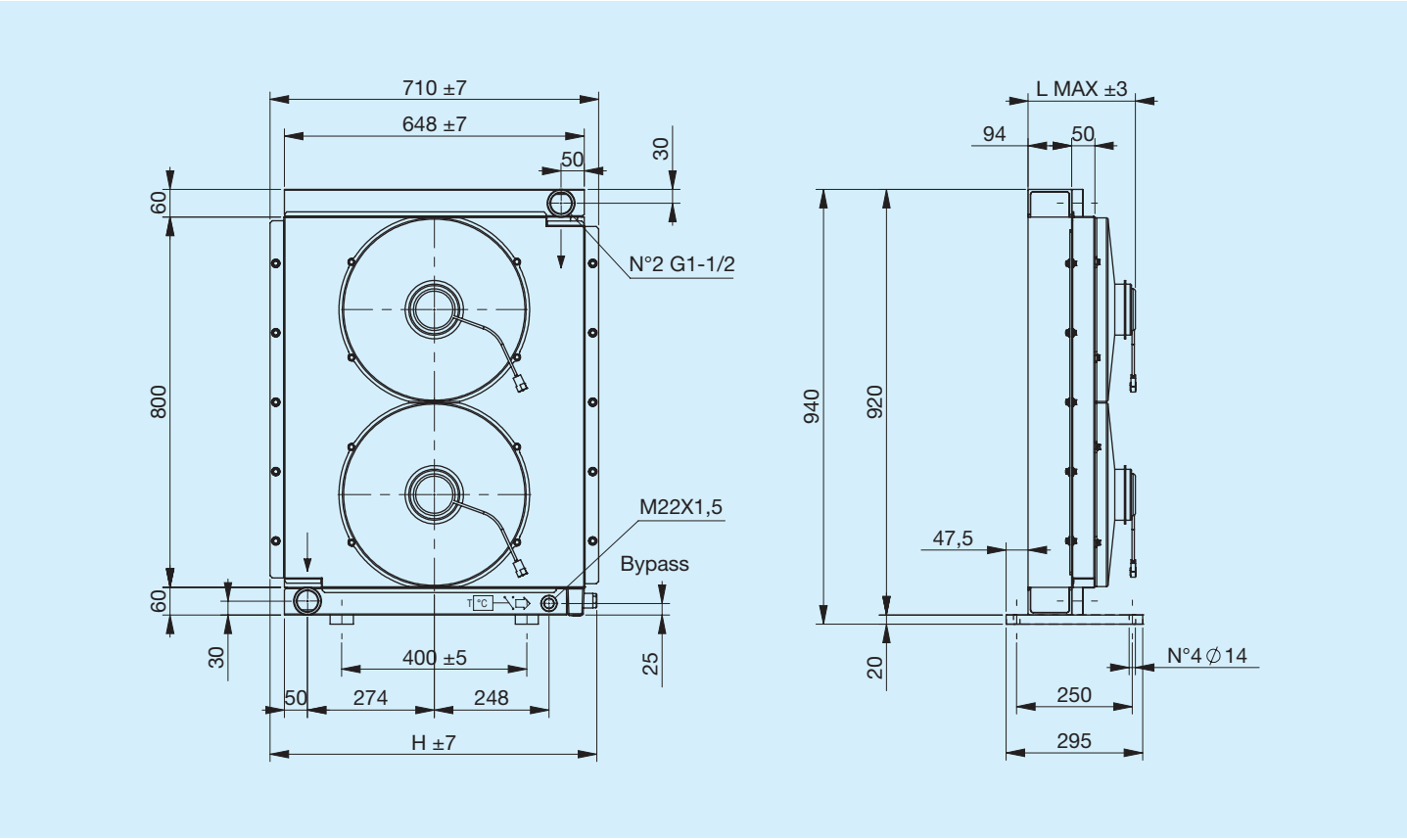

Code	Description	Ø Fan	Air flow rate	Voltage	Current	L Max	H	Weight	Capacity
		mm	m³/h	V	A	mm	mm	Kg	l
FR633153103	A80 2EAP 12V bypass T15 V.T. 3 bar 60°C	2X385	2X2850	12	2X19.7	230	706	38	18
FR633153104	A80 2ESP 12V bypass T15 V.T. 3 bar 60°C	2X385	2X3070	12	2X18.7	230	706	38	18
FR633151003	A80 2EAP 12V bypass T15 VNR 4.5 bar	2X385	2X2850	12	2X19.7	230	690	38	18
FR633151004	A80 2ESP 12V bypass T15 VNR 4.5 bar	2X385	2X3070	12	2X18.7	230	690	38	18
FR633153113	A80 2EAP 24V bypass T15 V.T. 3 bar 60°C	2X385	2X3070	24	2X10	230	706	38	18
FR633153114	A80 2ESP 24V bypass T15 V.T. 3 bar 60°C	2X385	2X3180	24	2X9.4	230	706	38	18
FR633151013	A80 2EAP 24V bypass T15 VNR 4.5 bar	2X385	2X3070	24	2X10	230	690	38	18
FR633151014	A80 2ESP 24V bypass T15 VNR 4.5 bar	2X385	2X3180	24	2X9.4	230	690	38	18
FR633150003	A80 2EAP 12V	2X385	2X2850	12	2X19.7	230	710	38	18
FR633150004	A80 2ESP 12V	2X385	2X3070	12	2X18.7	230	710	38	18
FR633150013	A80 2EAP 24V	2X385	2X3070	24	2X10	230	710	38	18
FR633150014	A80 2ESP 24V	2X385	2X3180	24	2X9.4	230	710	38	18

Heat exchange (thermal) capacity

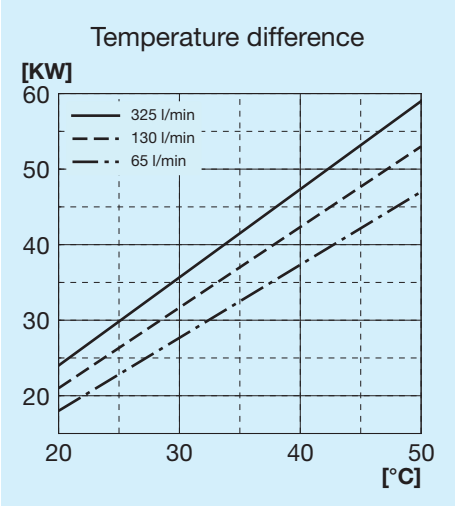

Radiator passage pressure drop

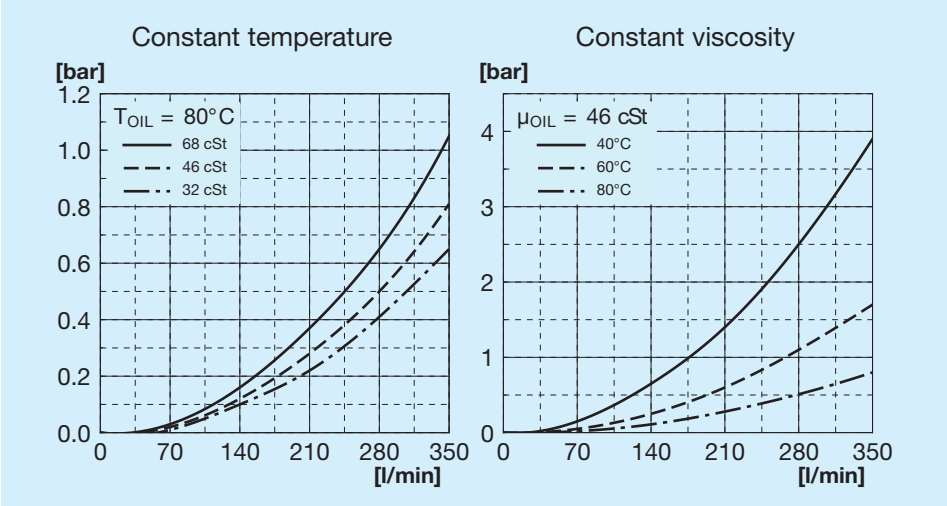

Bypass passage load loss

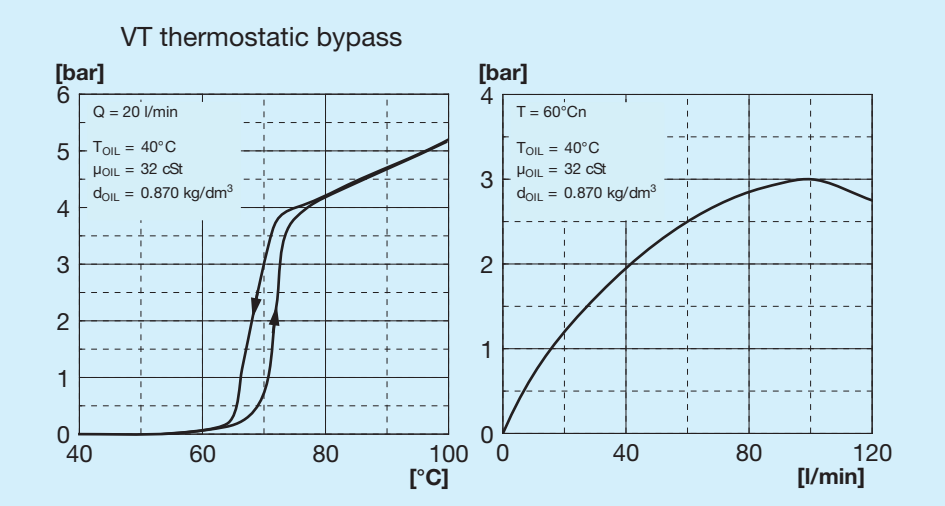

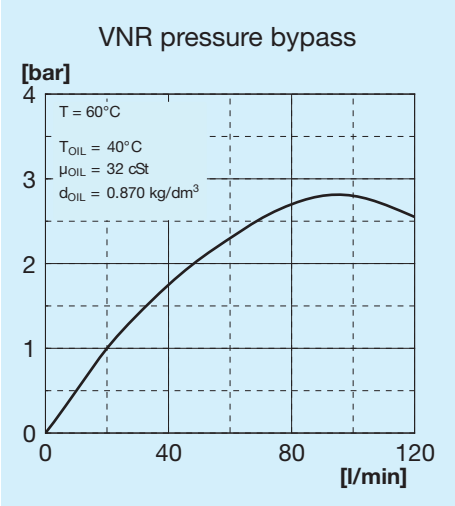

Bypass valves

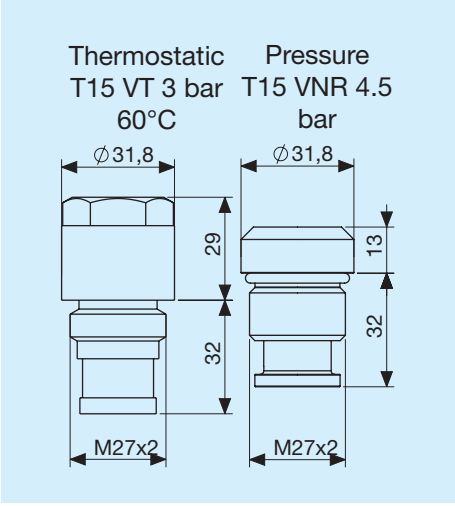

Legend

A80	Exchanger type
2E	2 Solenoid valves
A	Aspirating
S	Blowing
AP	High power aspirating
SP	High power blower
AX	Extra high power aspirating
SX	Extra high power blower
12V	Fan unit voltage
24V	Fan unit voltage
T15 VT	Thermostatic bypass valve 3 bar 60°C
T15 VNR	Pressure bypass valve at 4.5 bar

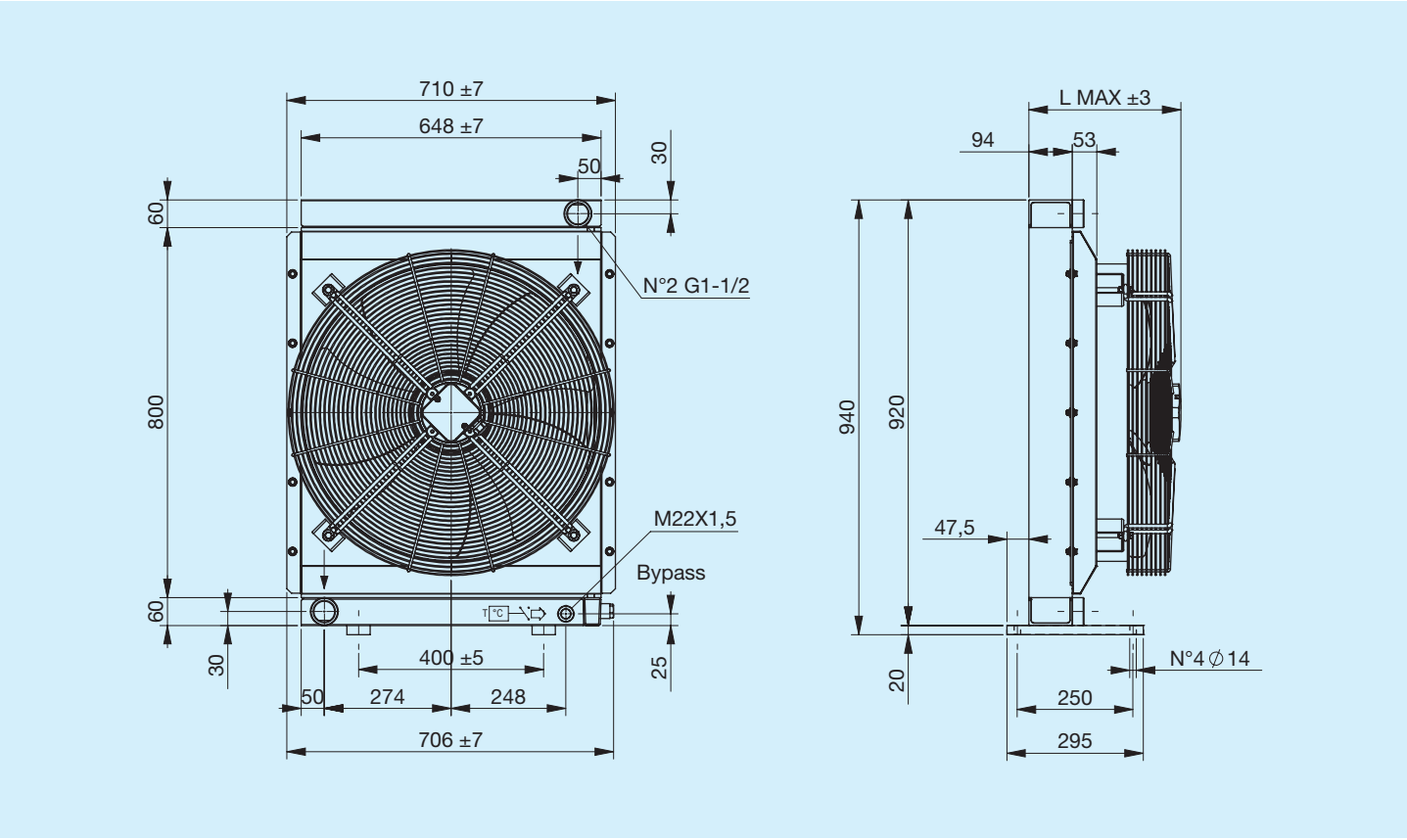

Code	Description	Ø Fan mm	Power W	Frequency Hz	Speed min-¹	Protection IP	L Max mm	H mm	Weight Kg	Capacity l
FR633153131	**A80 1EA 230V bypass T15 V.T. 3 bar 60°C**	630	600	50	860	54	337	706	45	18
FR633153132	**A80 1ES 230V bypass T15 V.T. 3 bar 60°C**	630	600	50	860	54	337	706	45	18
FR633151031	**A80 1EA 230V bypass T15 VNR. 4.5 bar**	630	600	50	860	54	337	690	45	18
FR633151032	**A80 1ES 230V bypass T15 VNR. 4.5 bar**	630	600	50	860	54	337	690	45	18
FR633153121	**A80 1EA 400V bypass T15 V.T. 3 bar 60°C**	630	570 920	50 60	900 990	54	337	706	45	18
FR633153122	**A80 1ES 400V bypass T15 V.T. 3 bar 60°C**	630	640 790	50 60	890 1005	54	337	706	45	18
FR633151021	**A80 1EA 400V bypass T15 VNR. 4.5 bar**	630	570 920	50 60	900 990	54	337	690	45	18
FR633151022	**A80 1ES 400V bypass T15 VNR 4.5 bar**	630	640 790	50 60	890 1005	54	337	690	45	18
FR633150031	**A80 1EA 230V**	630	600	50	860	54	337	710	45	18
FR633150032	**A80 1ES 230V**	630	600	50	860	54	337	710	45	18
FR633150021	**A80 1EA 400V**	630	570 920	50 60	900 990	54	337	710	45	18
FR633150022	**A80 1ES 400V**	630	640 790	50 60	890 1005	54	337	710	45	18

Characteristic curves

Heat exchange (thermal) capacity

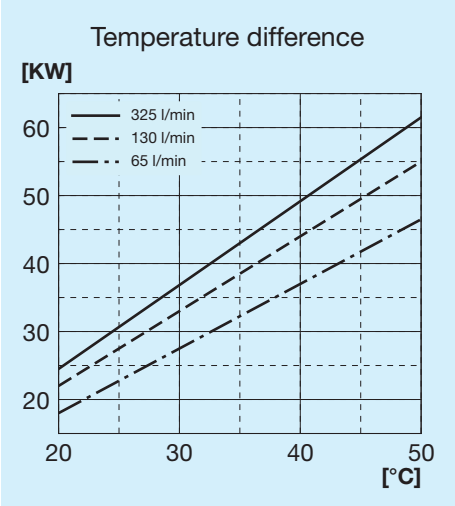

Radiator passage pressure drop

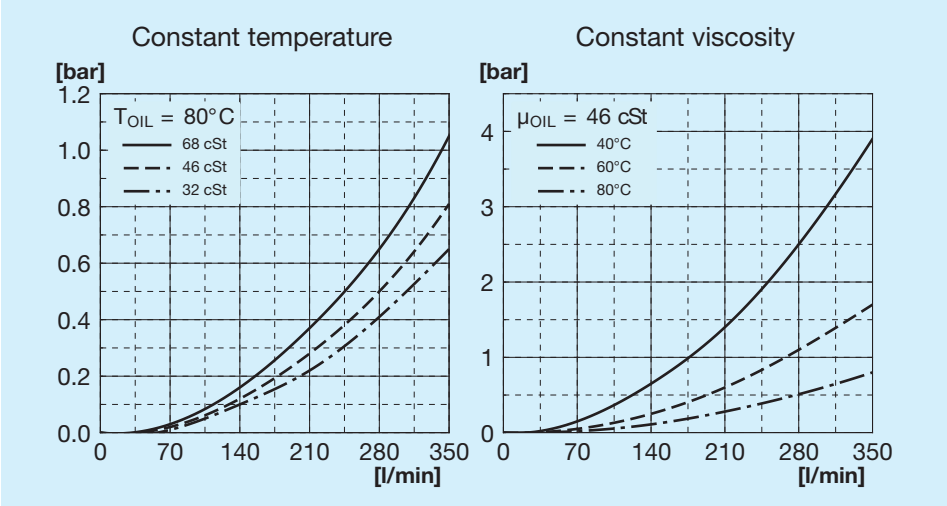

Bypass passage load loss

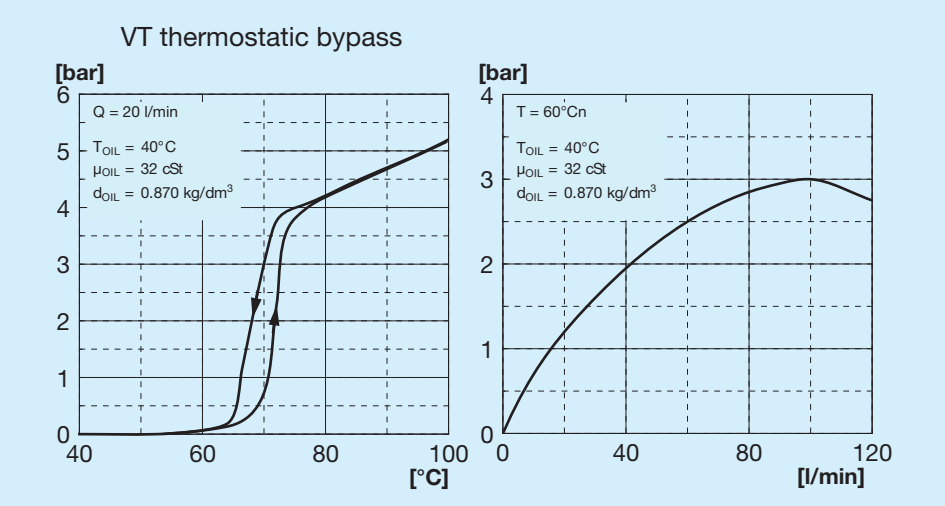

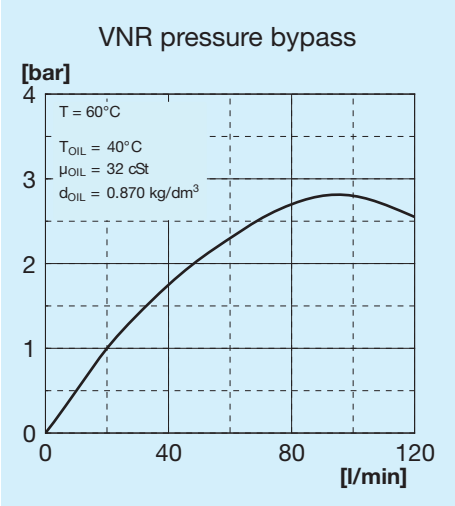

Bypass valves

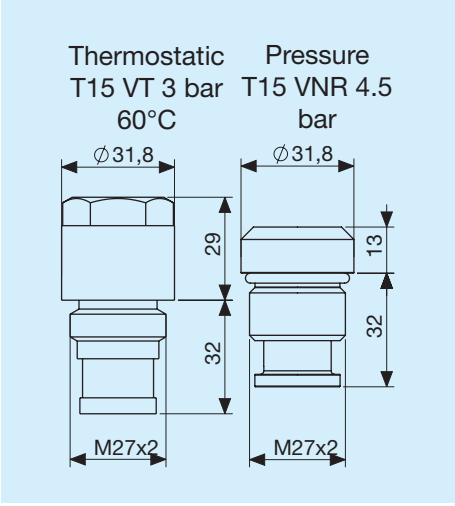

Legend

A80	Exchanger type
1E	1 Fan unit
A	Aspirating
S	Blowing
230V	Fan unit voltage
400V	Fan unit voltage
T15 VT	Thermostatic bypass valve 3 bar 60°C
T15 VNR	Pressure bypass valve at 4.5 bar

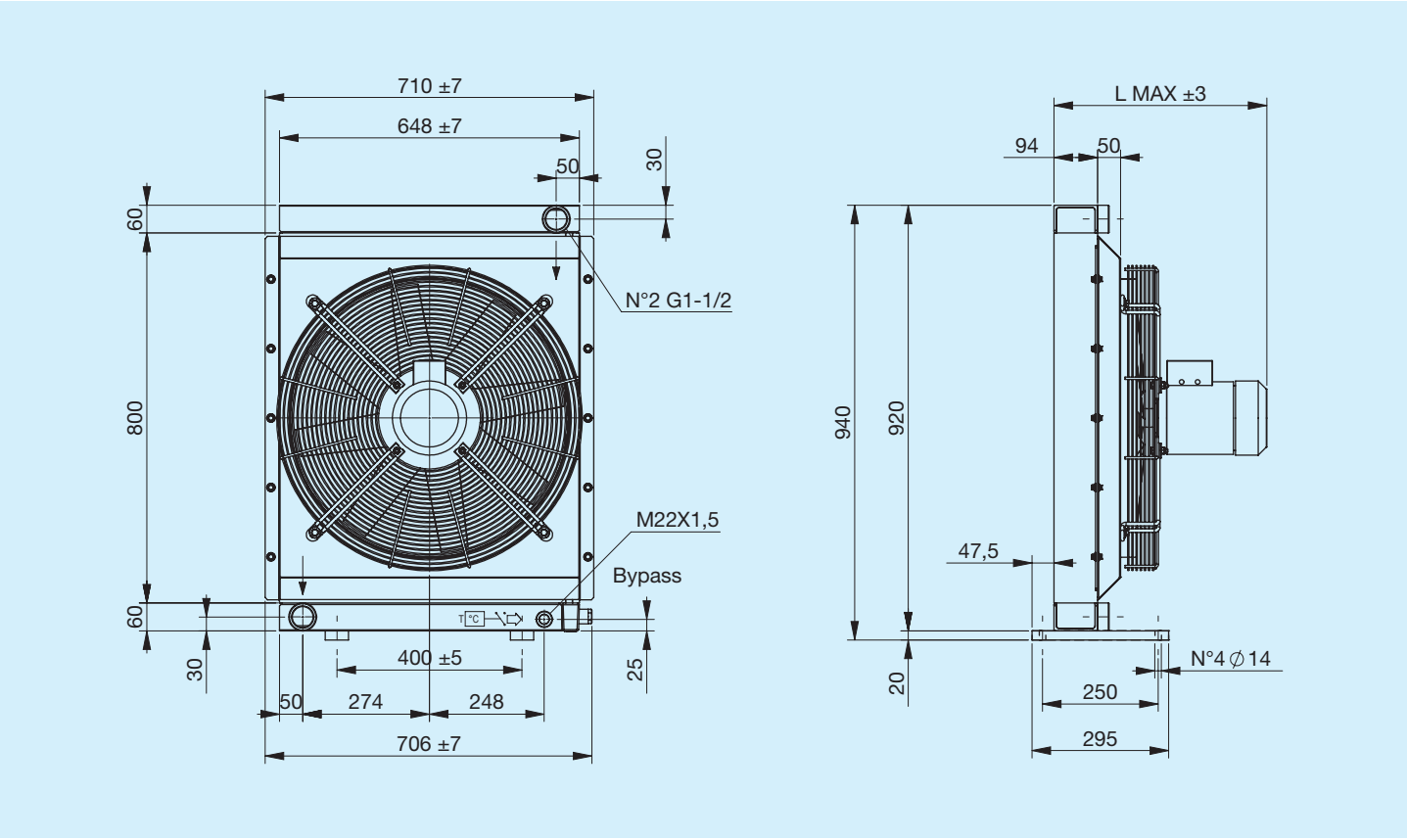

Code	Description	Ø Fan	Power	Frequency	Speed	Protection	L Max	H	Weight	Capacity
		mm	W	Hz	min-¹	IP	mm	mm	Kg	l
FR633153141	A80 1EA 230V-B14 bypass T15 V.T. 3 bar 60°C	580	750	50	1390	65	458	706	53.5	18
FR633153142	A80 1EA 230V-B14 bypass T15 V.T. 3 bar 60°C	580	750	50	1390	65	458	706	53.5	18
FR633151041	A80 1EA 230V-B14 bypass T15 VNR 4.5 bar	580	750	50	1390	65	458	690	53.5	18
FR633151042	A80 1EA 230V-B14 bypass T15 VNR 4.5 bar	580	750	50	1390	65	458	690	53.5	18
FR633153151	A80 1EA 400V-B14 bypass T15 V.T. 3 bar 60°C	580	750	50	1390	65	458	706	53.5	18
FR633153152	A80 1ES 400V-B14 bypass T15 V.T. 3 bar 60°C	580	750	50	1390	65	458	706	53.5	18
FR633151051	A80 1EA 400V-B14 bypass T15 VNR 4.5 bar	580	750	50	1390	65	458	690	53.5	18
FR633151052	A80 1ES 400V-B14 bypass T15 VNR 4.5 bar	580	750	50	1390	65	458	690	53.5	18
FR633150041	A80 1EA 230V-B14	580	750	50	1390	65	458	710	53.5	18
FR633150042	A80 1ES 230V-B14	580	750	50	1390	65	458	710	53.5	18
FR633150051	A80 1EA 400V-B14	580	750	50	1390	65	458	710	53.5	18
FR633150052	A80 1ES 400V-B14	580	750	50	1390	65	458	710	53.5	18

Heat exchange (thermal) capacity

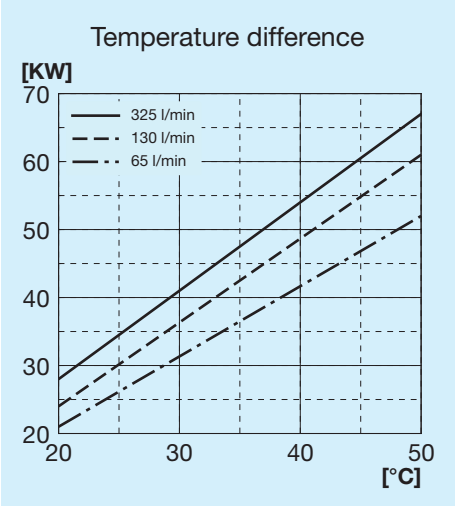

Radiator passage pressure drop

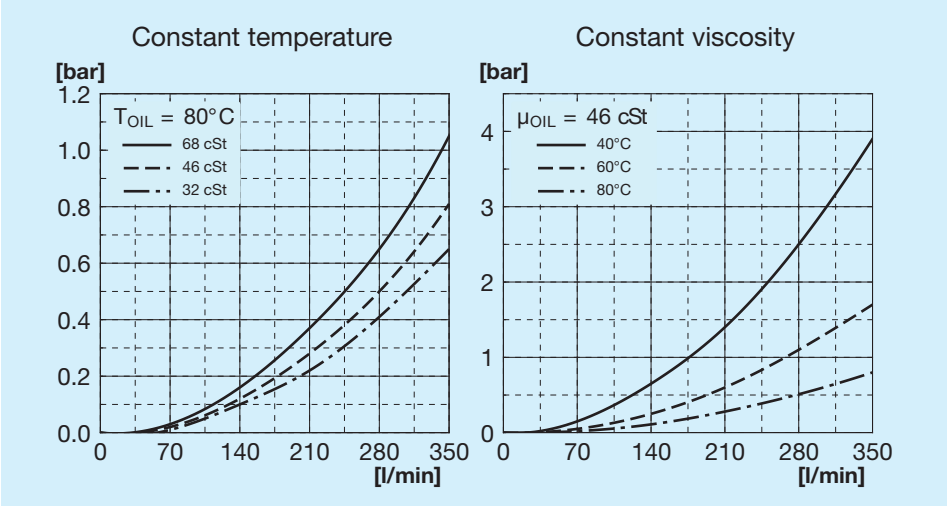

Bypass passage load loss

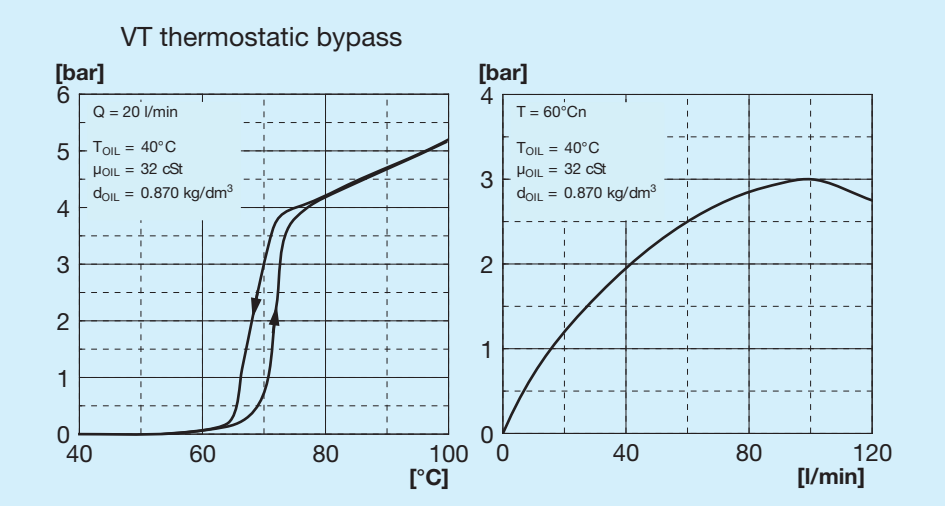

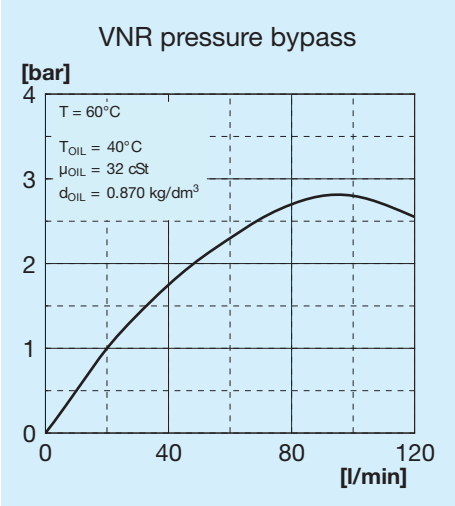

Bypass valves

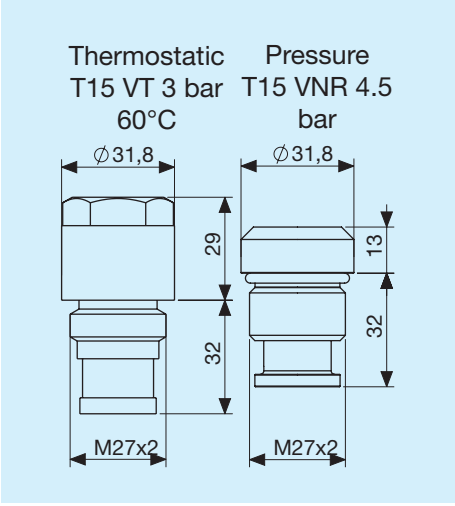

Legend

A80	Exchanger type
1E	1 Fan unit
A	Aspirating
S	Blowing
230V B14	Fan unit voltage
400V B14	Fan unit voltage
T15 VT	Thermostatic bypass valve 3 bar 60°C
T15 VNR	Pressure bypass valve at 4.5 bar

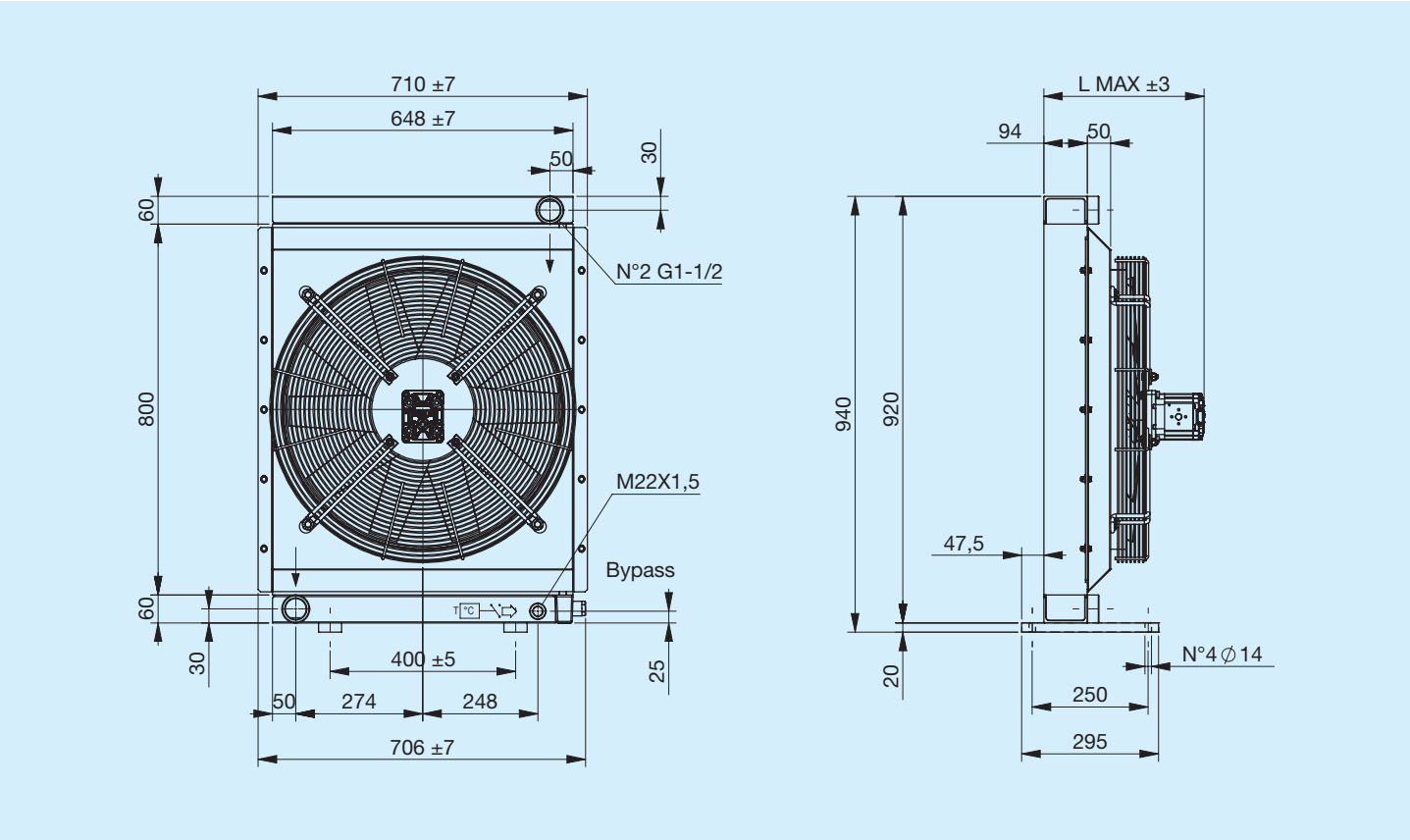

Code	Description	Ø Fan mm	Motor displacement cm3/h	L Max mm	H mm	Weight Kg	Capacity l
FR634153103	A80 IA SETT.GR2 bypass T15 V.T. 3 bar 60°C	580	_	280	706	46	18
FR634153104	A80 IS SETT.GR2 bypass T15 V.T. 3 bar 60°C	580	_	280	706	46	18
FR634151003	A80 IA SETT.GR2 bypass T15 VNR 4.5 bar	580	_	280	690	46	18
FR634151004	A80 IS SETT.GR2 bypass T15 VNR 4.5 bar	580	_	280	690	46	18
FR634153113	A80 IA HYDR.MOT. GR2 bypass T15 V.T. 3 bar 60°C	580	11	340	706	47	18
FR634153114	A80 IS HYDR.MOT. GR2 bypass T15 V.T. 3 bar 60°C	580	11	340	706	47	18
FR634151013	A80 IA HYDR.MOT. GR2 bypass T15 VNR 4.5 bar	580	11	340	690	47	18
FR634151014	A80 IS HYDR.MOT. GR2 bypass T15 VNR 4.5 bar	580	11	340	690	47	18
FR634150003	A80 IA SETT.GR2	580	_	280	710	46	18
FR634150004	A80 IS SETT.GR2	580	_	280	710	46	18
FR634150013	A80 IA HYDR.MOT. GR2	580	11	340	710	47	18
FR634150014	A80 IS HYDR.MOT. GR2	580	11	340	710	47	18

Heat exchange (thermal) capacity

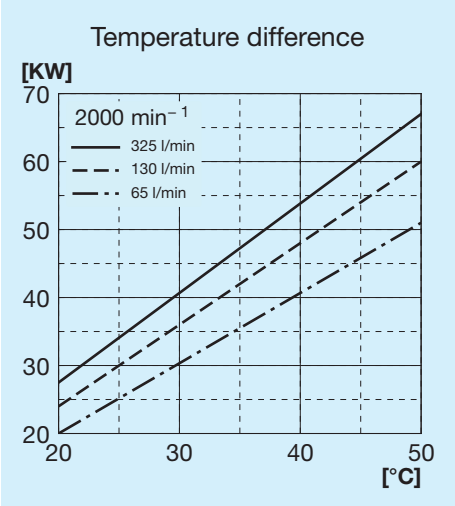

Radiator passage pressure drop

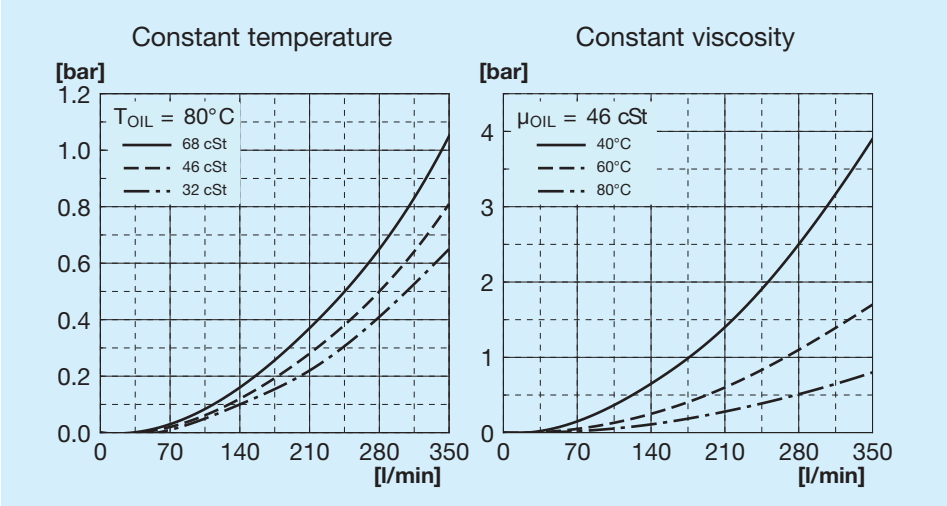

Bypass passage load loss

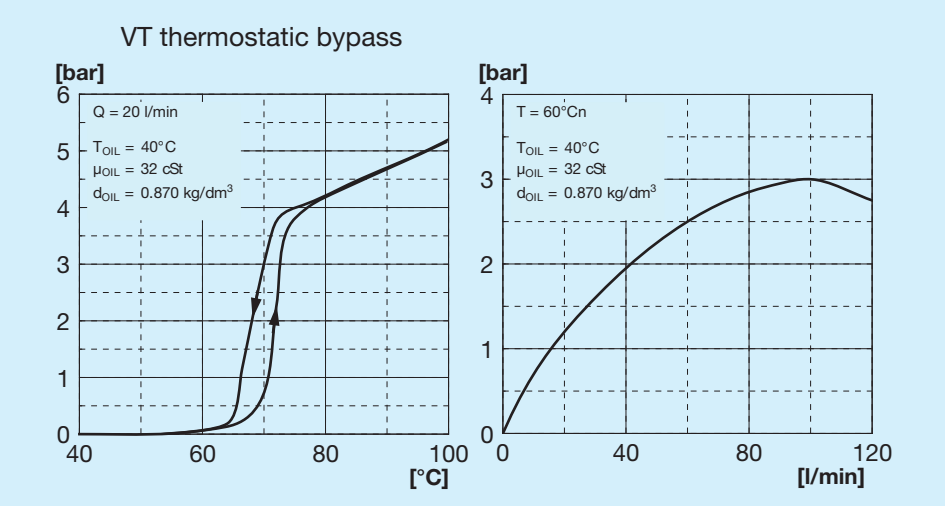

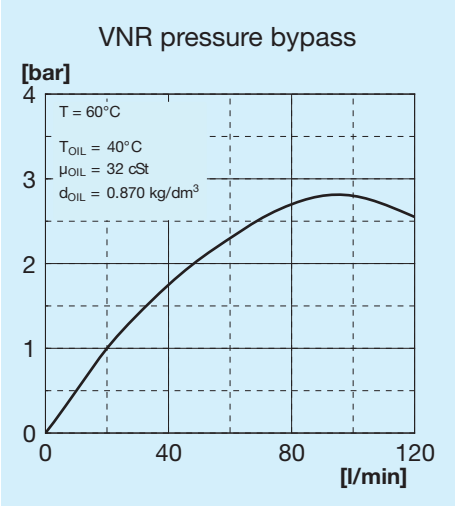

Bypass valves

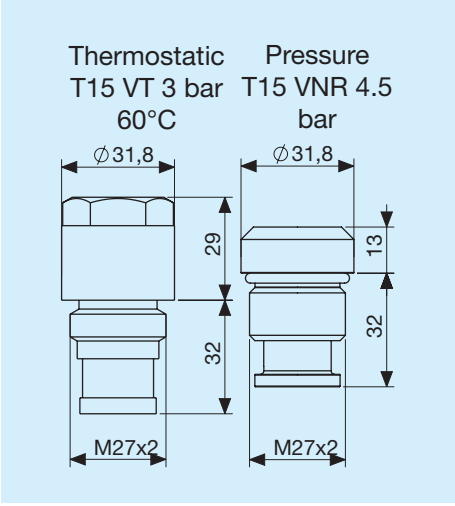

Legend

A80	Exchanger type
IA	Hydraulic aspirating
IS	Hydraulic blowing
SETT.	With motor mounting
HYD. MOT.	With integrated motor mounting
GR1	Group 1
GR2	Group 2
T15 VT	Thermostatic bypass valve 3 bar 60°C
T15 VNR	Pressure bypass valve at 4.5 bar

Thermostats

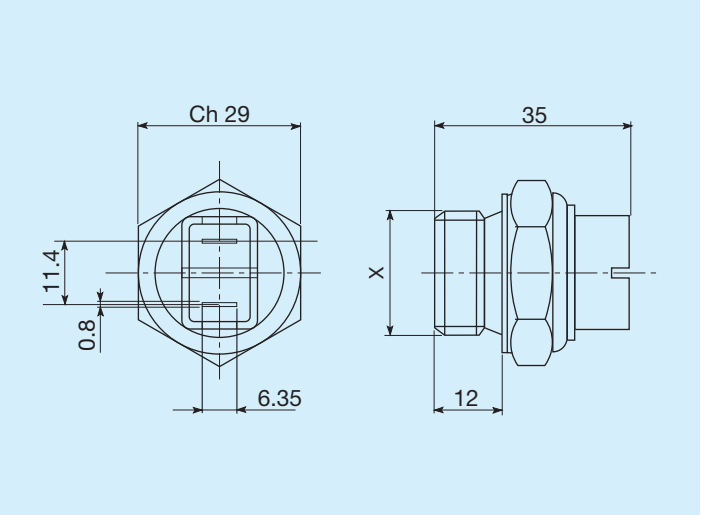

Trigger temperature C°	Threading	Code
45 - 35	M22x1.5	FR361104535R
60 - 50	M22x1.5	FR361106050R
80 - 70	M22x1.5	FR361108070R
82 - 68	M22x1.5	FR361108268R
85 - 76	M22x1.5	FR361108576R

IP54 protected thermal switch

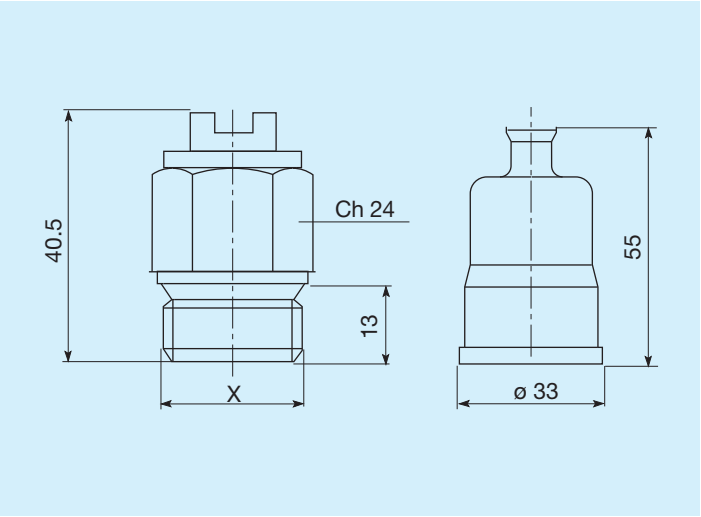

Trigger temperature C°	Threading	Code
45 - 35	M22x1.5	FR361124535R
50 - 40	M22x1.5	FR361125040R
60 - 50	M22x1.5	FR361126050R
70 - 60	M22x1.5	FR361127060R
80 -70	M22x1.5	FR361128070R

IP65 protected thermal switch

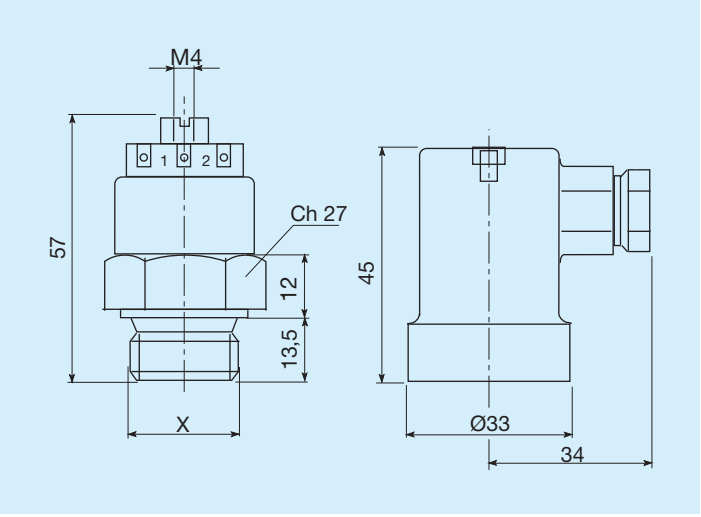

Trigger temperature C°	Threading	Code
45 - 35	M22x1.5	FR361154535R
47 - 36	M22x1.5	FR361155040R
60 - 50	M22x1.5	FR361156050R
80 - 70	M22x1.5	FR361158070R