A86

Before using the heat exchanger, carefully read the document entitled GENERAL INSTRUCTIONS FOR HEAT EXCHANGER USE.

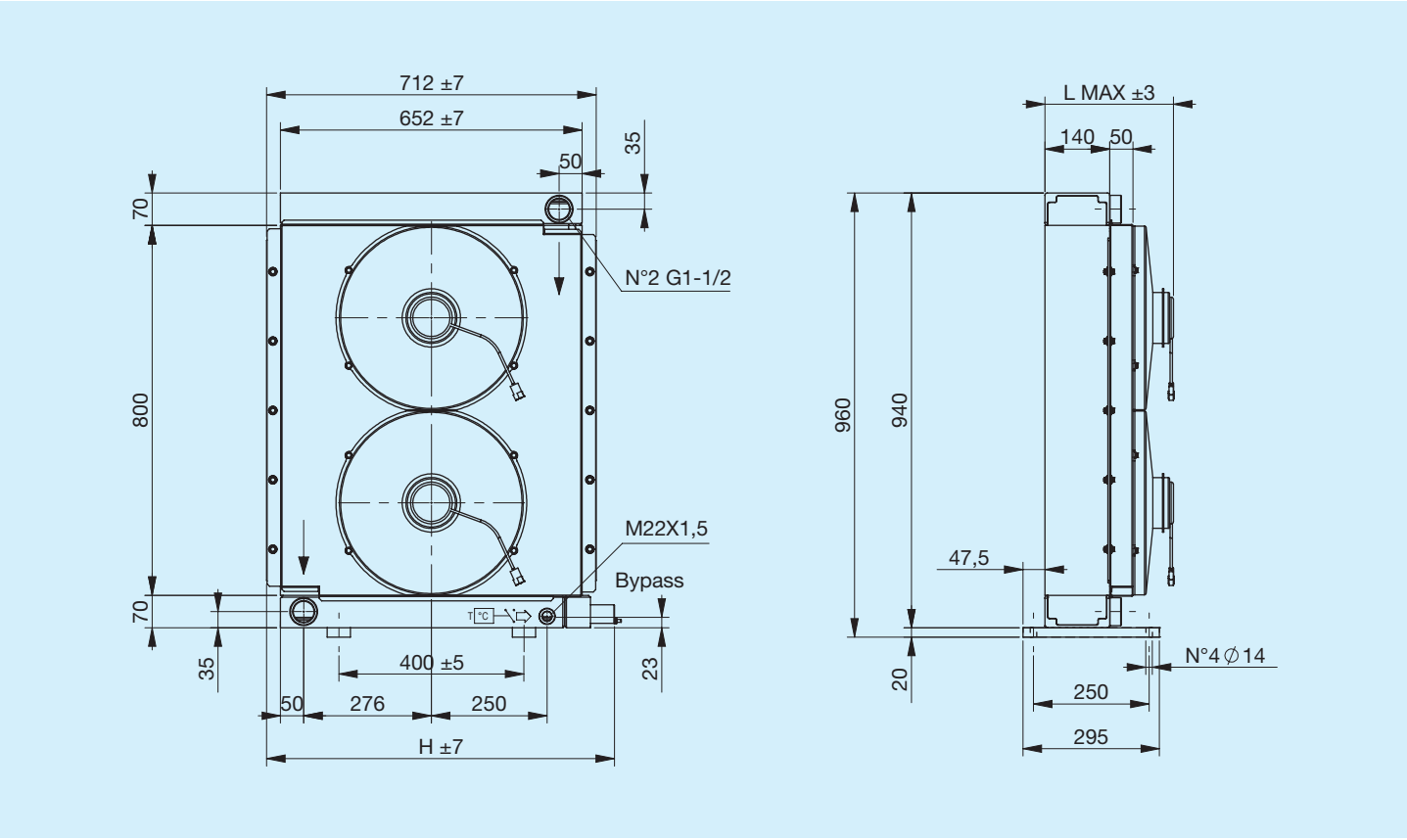

Code	Description	Ø Fan	Air flow rate	Voltage	Current	L Max	H	Weight	Capacity
		mm	m³/h	V	A	mm	mm	Kg	l
FR633263103	A86 2EAP 12V bypass T15 V.T. 6 bar 50°C	2X385	2X2850	12	2X19.7	280	752	55	28
FR633263104	A86 2ESP 12V bypass T15 V.T. 6 bar 50°C	2X385	2X3070	12	2X18.7	280	752	55	28
FR633261003	A86 2EAP 12V bypass T15 VNR 4.5 bar	2X385	2X2850	12	2X19.7	280	714	55	28
FR633261004	A86 2ESP 12V bypass T15 VNR 4.5 bar	2X385	2X3070	12	2X18.7	280	714	55	28
FR633263113	A86 2EAP 24V bypass T15 V.T. 6 bar 50°C	2X385	2X3070	24	2X10	280	752	55	28
FR633263114	A86 2ESP 24V bypass T15 V.T. 6 bar 50°C	2X385	2X3180	24	2X9.4	280	752	55	28
FR633261013	A86 2EAP 24V bypass T15 VNR 4.5 bar	2X385	2X3070	24	2X10	280	714	55	28
FR633261014	A86 2ESP 24V bypass T15 VNR 4.5 bar	2X385	2X3180	24	2X9.4	280	714	55	28
FR633260003	A86 2EAP 12V	2X385	2X2850	12	2X19.7	280	710	55	28
FR633260004	A86 2ESP 12V	2X385	2X3070	12	2X18.7	280	710	55	28
FR633260013	A86 2EAP 24V	2X385	2X3070	24	2X10	280	710	55	28
FR633260014	A86 2ESP 24V	2X385	2X3180	24	2X9.4	280	710	55	28

Characteristic curves

Heat exchange (thermal) capacity

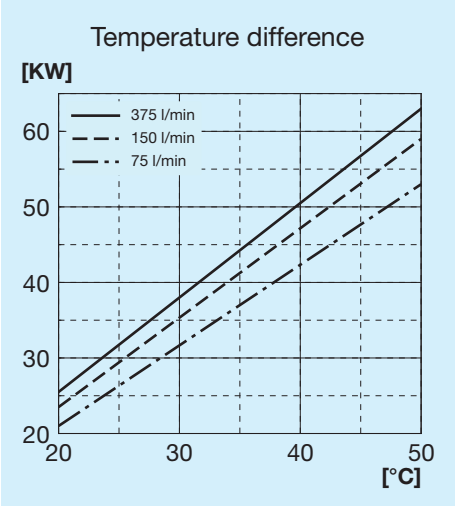

Radiator passage pressure drop

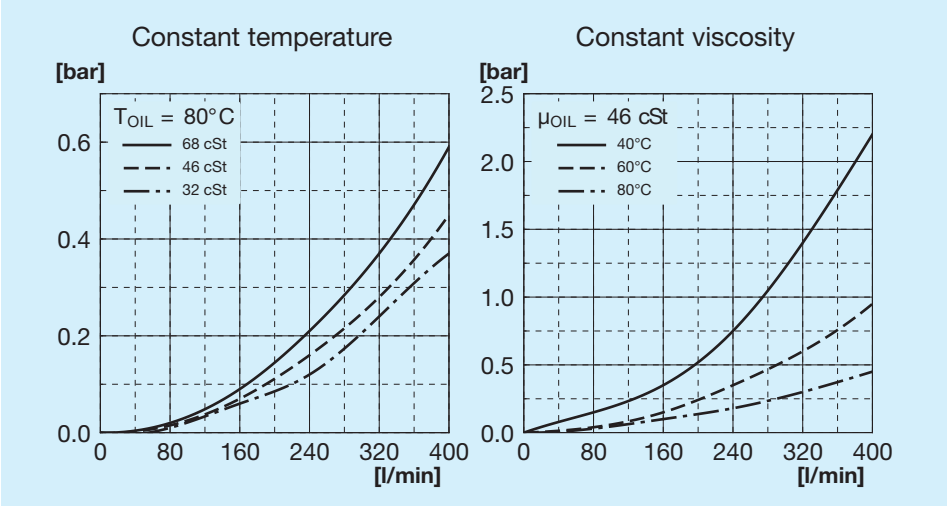

Bypass passage load loss

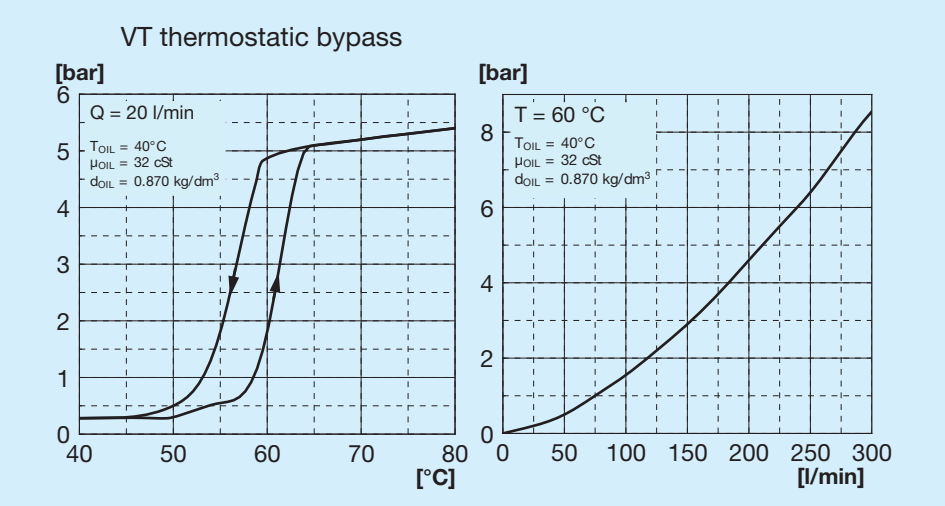

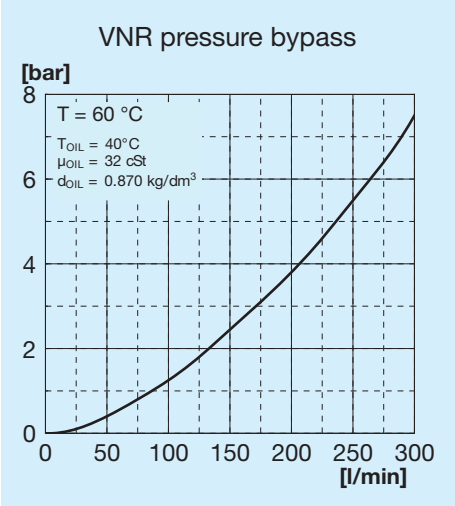

Bypass valves

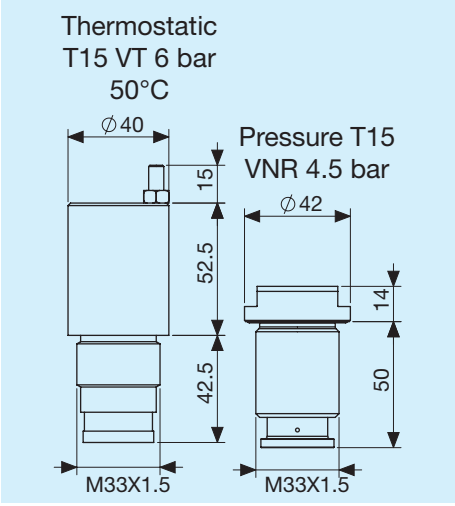

Legend

A86	Exchanger type
2E	2 Solenoid valves
A	Aspirating
S	Blowing
AP	High power aspirating
SP	High power blower
AX	Extra high power aspirating
SX	Extra high power blower
12V	Fan unit voltage
24V	Fan unit voltage
T15 VT	Thermostatic bypass valve 6 bar 50°C
T15 VNR	Pressure bypass valve at 4.5 bar

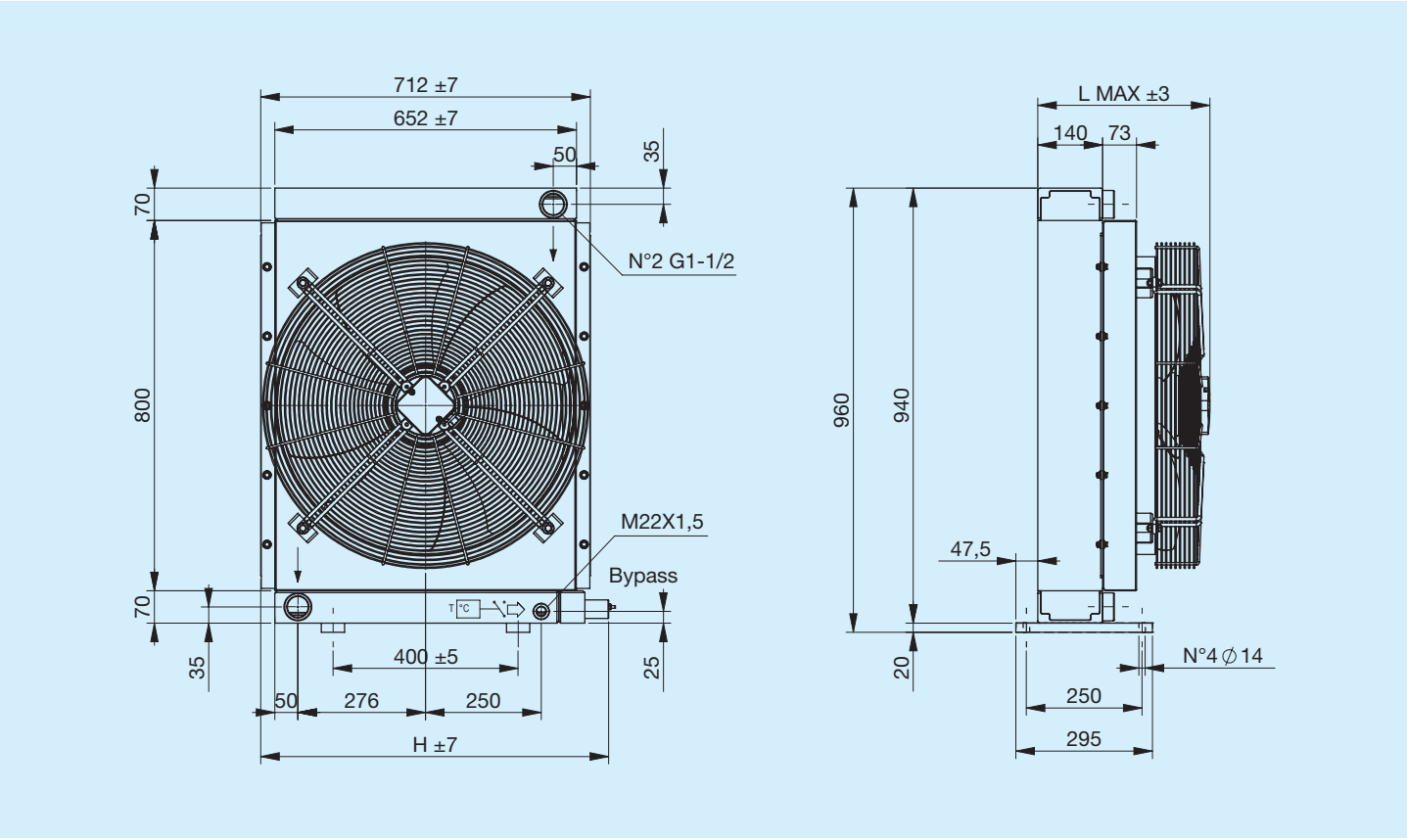

Code	Description	Ø Fan	Power	Frequency	Speed	Protection	L Max	H	Weight	Capacity
		mm	W	Hz	min-¹	IP	mm	mm	Kg	l
FR633263131	A86 1EA 230V bypass T15 V.T. 6 bar 50°C	630	600	50	860	54	383	752	57	28
FR633263132	A86 1ES 230V bypass T15 V.T. 6 bar 50°C	630	600	50	860	54	383	752	57	28
FR633261031	A86 1EA 230V bypass T15 VNR 4.5 bar	630	600	50	860	54	383	714	57	28
FR633261032	A86 1ES 230V bypass T15 VNR 4.5 bar	630	600	50	860	54	383	714	57	28
FR633263121	A86 1EA 400V bypass T15 V.T. 6 bar 50°C	630	570 920	50 60	900 990	54	383	752	57	28
FR633263122	A86 1ES 400V bypass T15 V.T. 6 bar 50°C	630	640 790	50 60	890 1005	54	383	752	57	28
FR633261021	A86 1EA 400V bypass T15 VNR 4.5 bar	630	570 920	50 60	900 990	54	383	714	57	28
FR633261022	A86 1ES 400V bypass T15 VNR 4.5 bar	630	640 790	50 60	890 1005	54	383	714	57	28
FR633260031	A86 1EA 230V	630	600	50	860	54	383	710	57	28
FR633260032	A86 1ES 230V	630	600	50	860	54	383	710	57	28
FR633260021	A86 1EA 400V	630	570 920	50 60	900 990	54	383	710	57	28
FR633260022	A86 1ES 400V	630	640 790	50 60	890 1005	54	383	710	57	28

Heat exchange (thermal) capacity

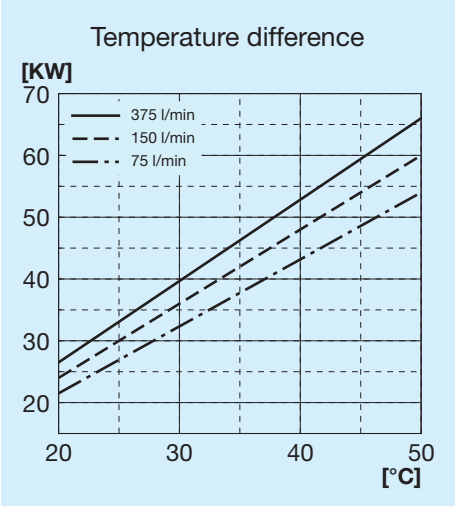

Radiator passage pressure drop

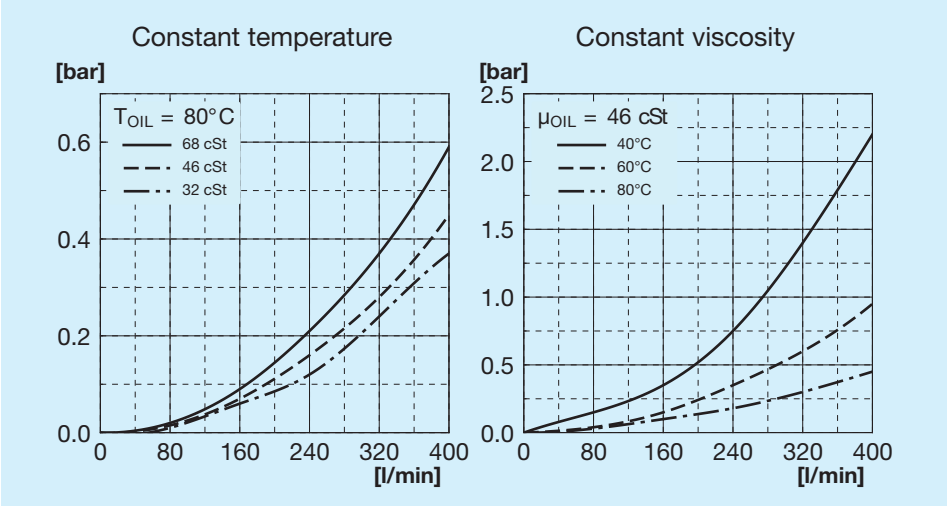

Bypass passage load loss

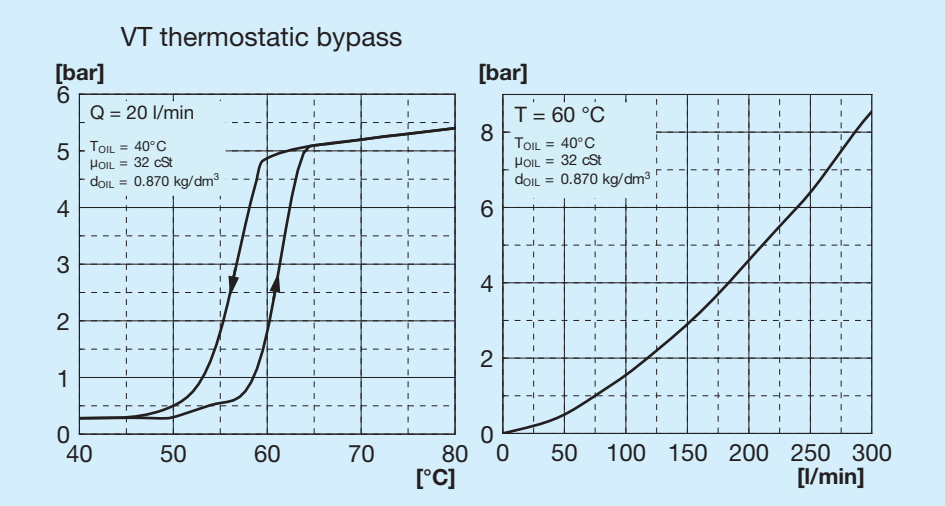

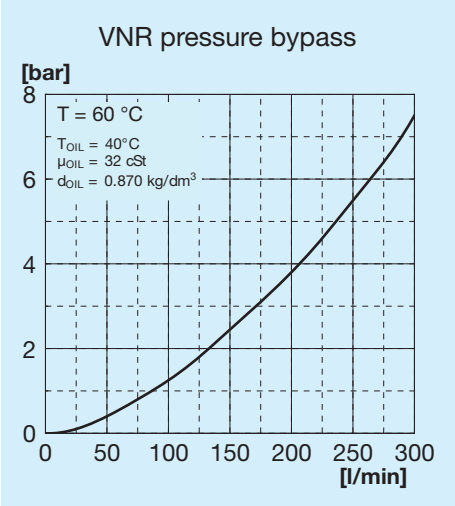

Bypass valves

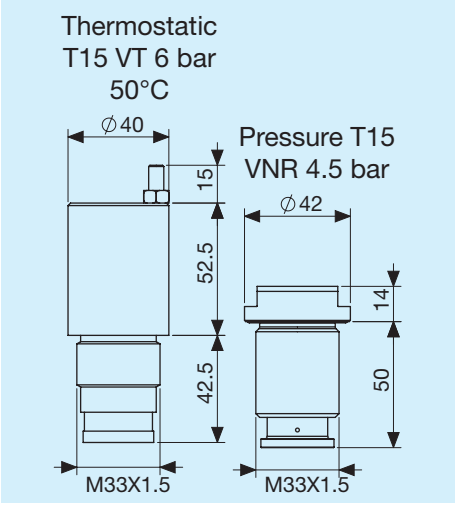

Legend

A86	Exchanger type
1E	1 Fan unit
A	Aspirating
S	Blowing
230V	Fan unit voltage
400V	Fan unit voltage
T15 VT	Thermostatic bypass valve 6 bar 50°C
T15 VNR	Pressure bypass valve at 4.5 bar

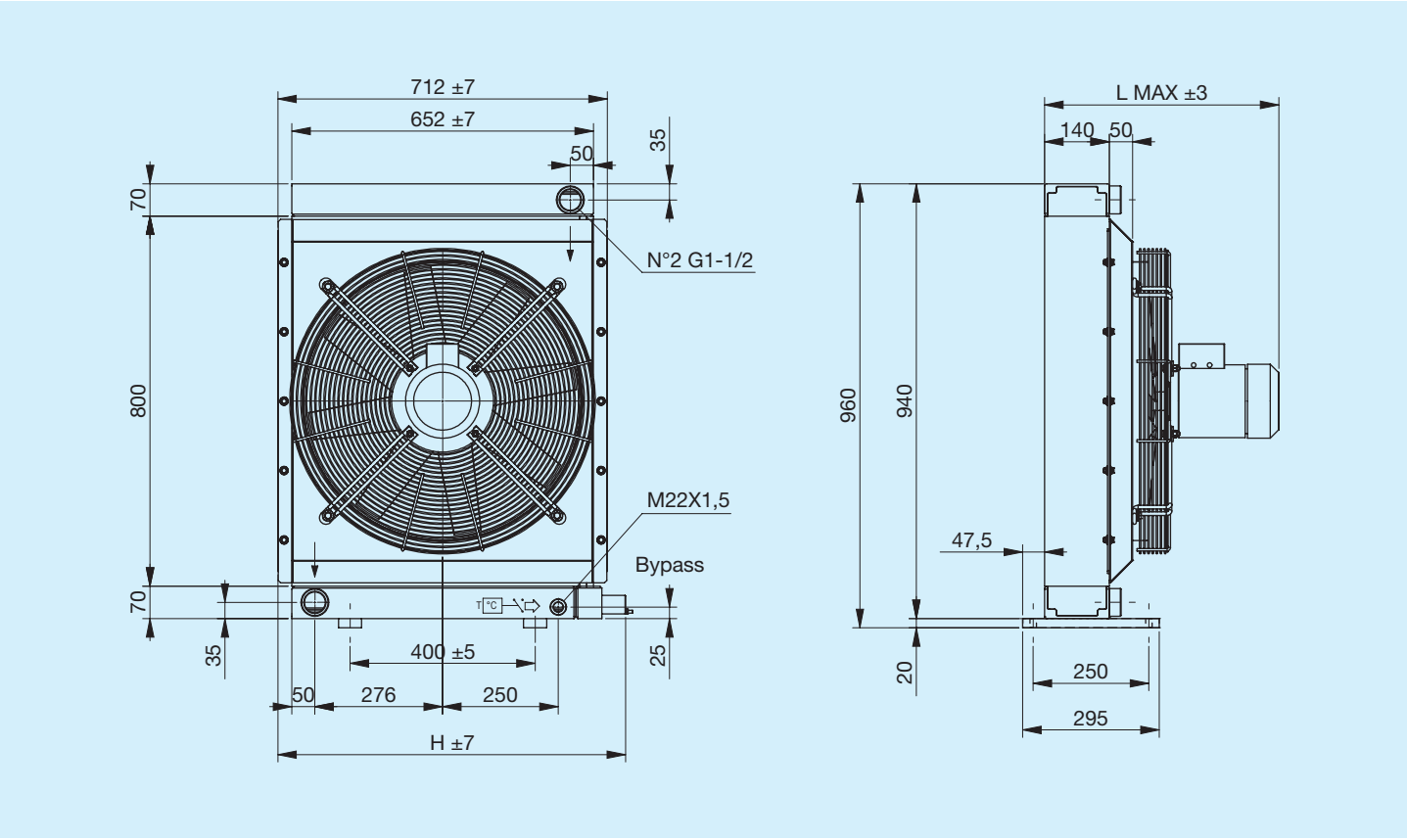

Code	Description	Ø Fan	Power	Frequency	Speed	Protection	L Max	H	Weight	Capacity
		mm	W	Hz	min-¹	IP	mm	mm	Kg	l
FR633263141	A86 1EA 230V-B14 bypass T15 V.T. 6 bar 50°C	580	750	50	1390	65	504	752	65.5	28
FR633263142	A86 1EA 230V-B14 bypass T15 V.T. 6 bar 50°C	580	750	50	1390	65	504	752	65.5	28
FR633261041	A86 1EA 230V-B14 bypass T15 VNR 4.5 bar	580	750	50	1390	65	504	714	65.5	28
FR633261042	A86 1EA 230V-B14 bypass T15 VNR 4.5 bar	580	750	50	1390	65	504	714	65.5	28
FR633263151	A86 1EA 400V-B14 bypass T15 V.T. 6 bar 50°C	580	750	50	1390	65	504	752	65.5	28
FR633263152	A86 1ES 400V-B14 bypass T15 V.T. 6 bar 50°C	580	750	50	1390	65	504	752	65.5	28
FR633261051	A86 1EA 400V-B14 bypass T15 VNR 4.5 bar	580	750	50	1390	65	504	714	65.5	28
FR633261052	A86 1ES 400V-B14 bypass T15 VNR 4.5 bar	580	750	50	1390	65	504	714	65.5	28
FR633260041	A86 1EA 230V-B14	580	750	50	1390	65	504	710	65.5	28
FR633260042	A86 1ES 230V-B14	580	750	50	1390	65	504	710	65.5	28
FR633260051	A86 1EA 400V-B14	580	750	50	1390	65	504	710	65.5	28
FR633260052	A86 1ES 400V-B14	580	750	50	1390	65	504	710	65.5	28

Heat exchange (thermal) capacity

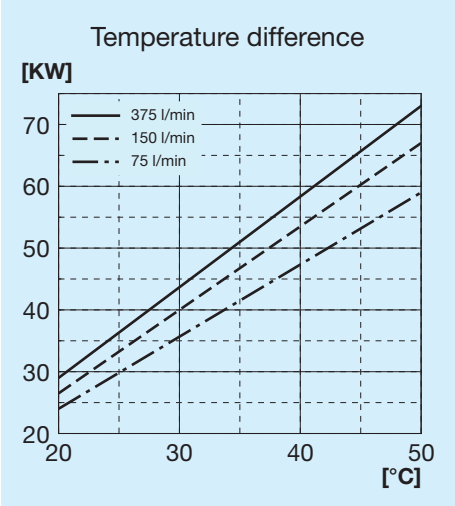

Radiator passage pressure drop

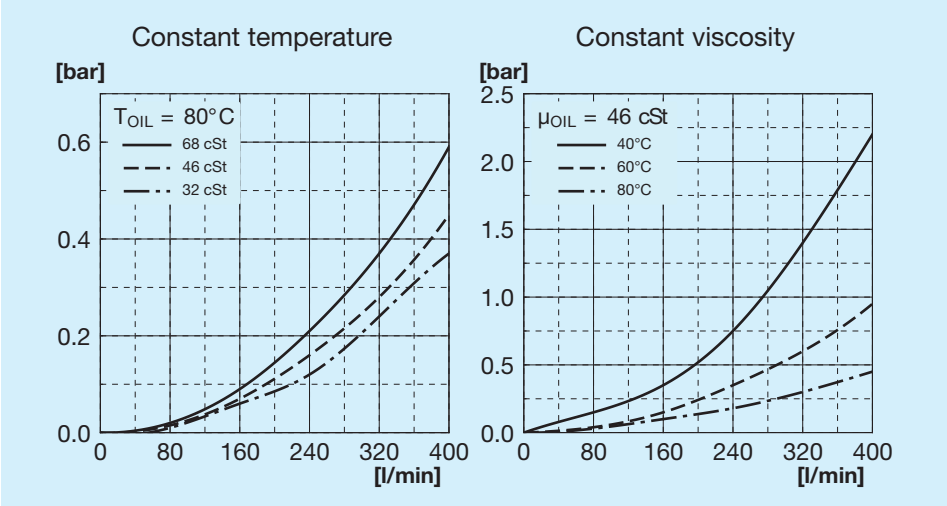

Bypass passage load loss

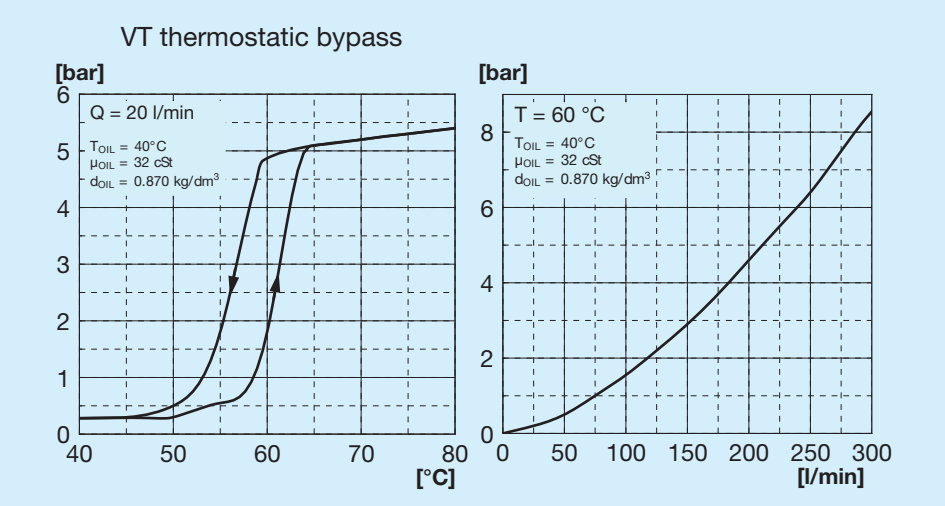

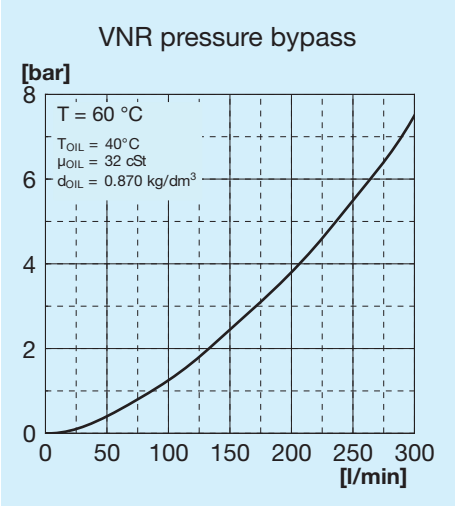

Bypass valves

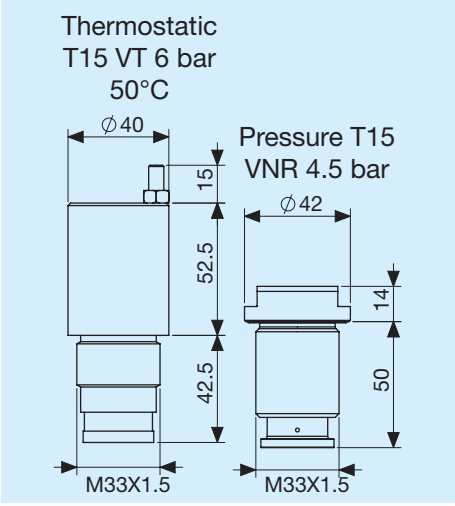

Legend

A86	Exchanger type
1E	1 Fan unit
A	Aspirating
S	Blowing
230V B14	Fan unit voltage
400V B14	Fan unit voltage
T15 VT	Thermostatic bypass valve 6 bar 50°C
T15 VNR	Pressure bypass valve at 4.5 bar

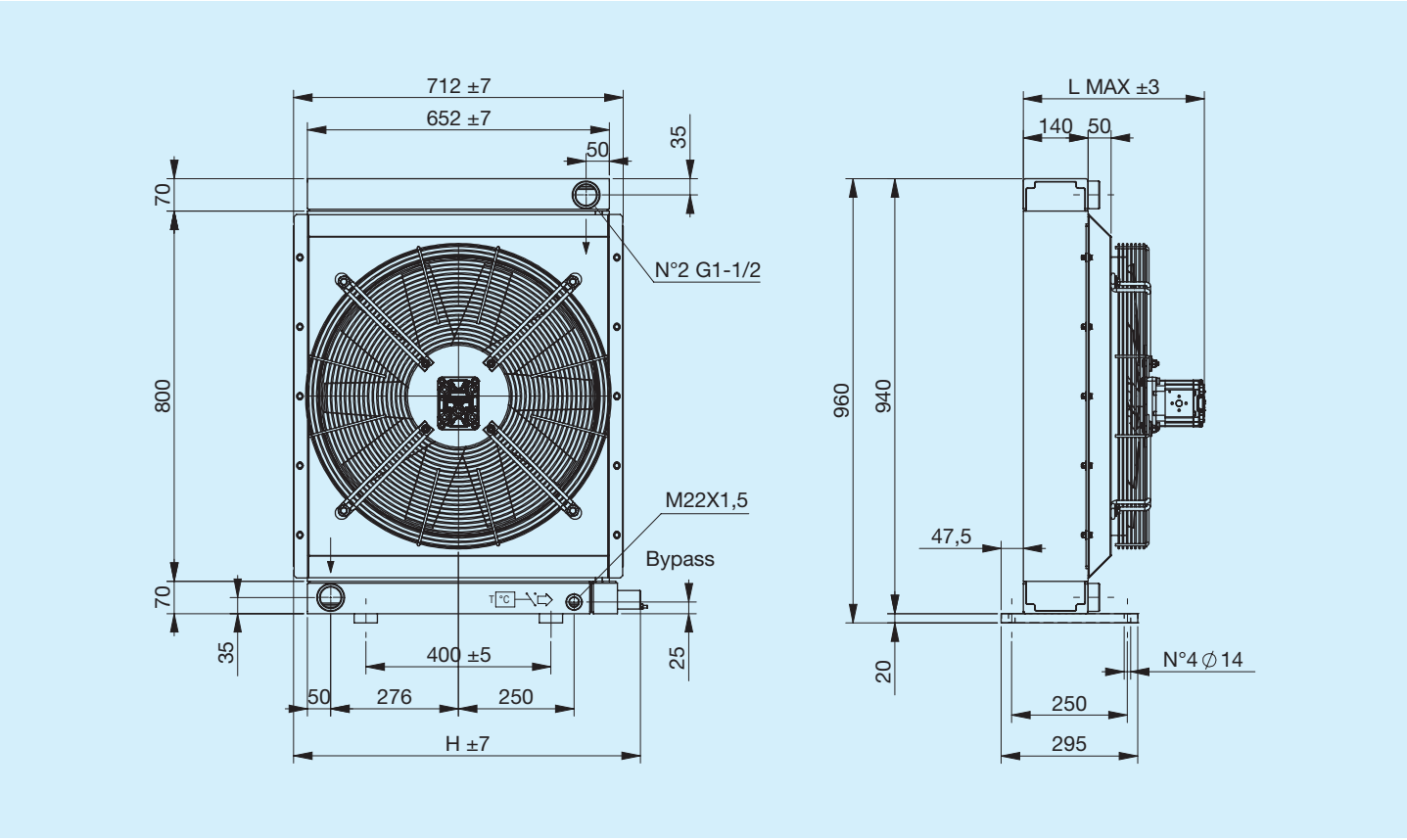

Code	Description	Ø Fan	Motor displace-ment	L Max	H	Weight	Capacity
		mm	cm3/h	mm	mm	Kg	l
FR634263103	A86 IA SETT.GR2 bypass T15 V.T. 6 bar 50°C	580	_	330	752	58	28
FR634263104	A86 IS SETT.GR2 bypass T15 V.T. 6 bar 50°C	580	_	330	752	58	28
FR634261003	A86 IA SETT.GR2 bypass T15 VNR 4.5 bar	580	_	330	714	58	28
FR634261004	A86 IS SETT.GR2 bypass T15 VNR 4.5 bar	580	_	330	714	58	28
FR634263113	A86 IA HYDR.MOT. GR2 bypass T15 V.T. 6 bar 50°C	580	11	390	752	59	28
FR634263114	A86 IS HYDR.MOT. GR2 bypass T15 V.T. 6 bar 50°C	580	11	390	752	59	28
FR634261013	A86 IA HYDR.MOT. GR2 bypass T15 VNR 4.5 bar	580	11	390	714	59	28
FR634261014	A86 IS HYDR.MOT. GR2 bypass T15 VNR 4.5 bar	580	11	390	714	59	28
FR634260003	A86 IA SETT.GR2	580	_	330	710	58	28
FR634260004	A86 IS SETT.GR2	580	_	330	710	58	28
FR634260013	A86 IA HYDR.MOT. GR2	580	11	390	710	59	28
FR634260014	A86 IS HYDR.MOT. GR2	580	11	390	710	59	28

Heat exchange (thermal) capacity

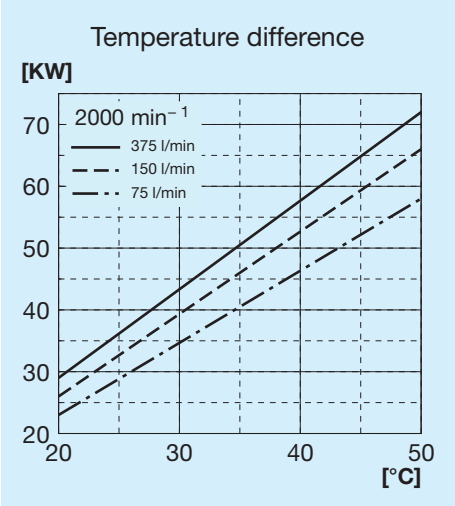

Radiator passage pressure drop

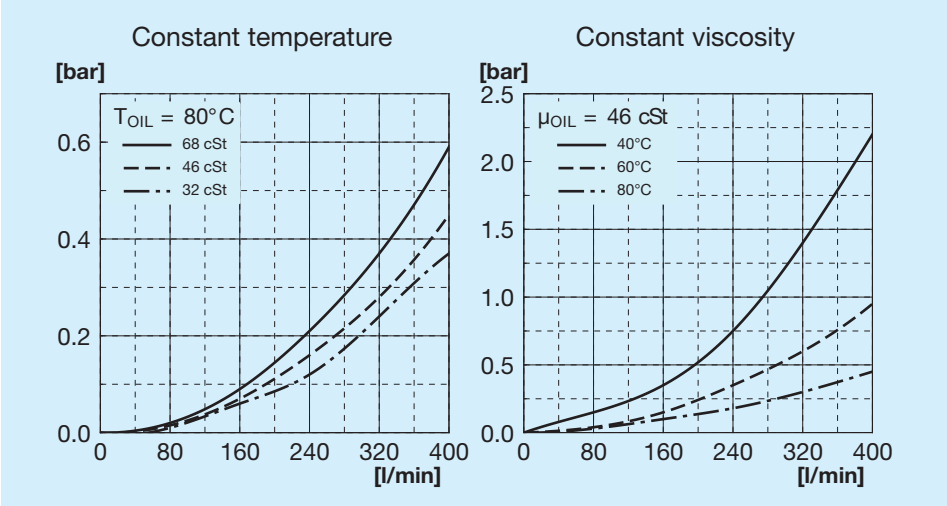

Bypass passage load loss

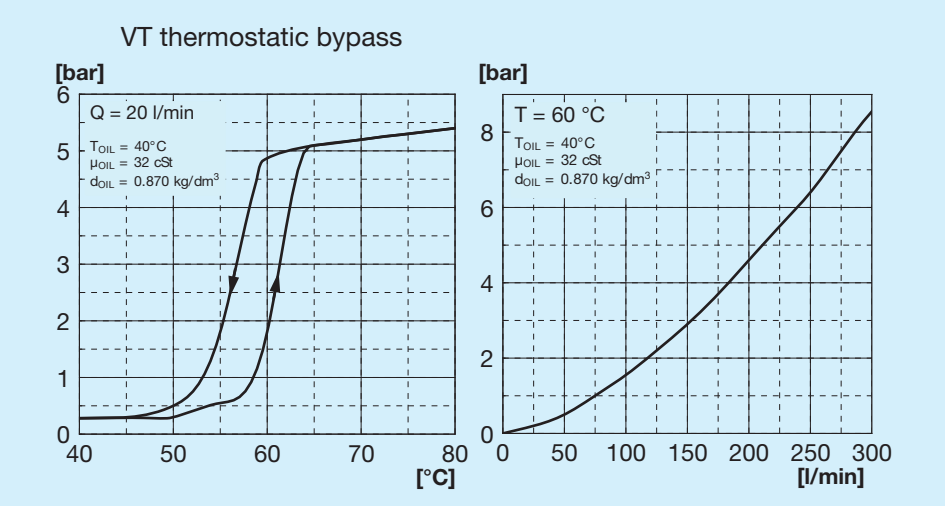

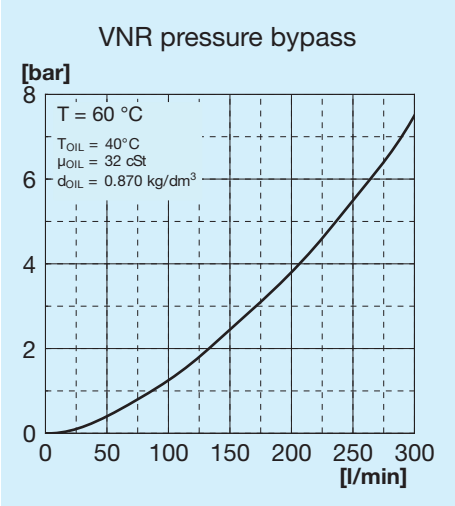

Bypass valves

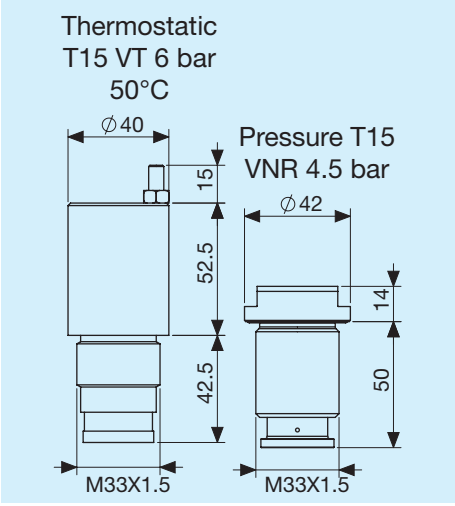

Legend

A86	Exchanger type
IA	Hydraulic aspirating
IS	Hydraulic blowing
SETT.	With motor mounting
HYD. MOT.	With integrated motor mounting
GR1	Group 1
GR2	Group 2
T15 VT	Thermostatic bypass valve 6 bar 50°C
T15 VNR	Pressure bypass valve at 4.5 bar

Thermostats

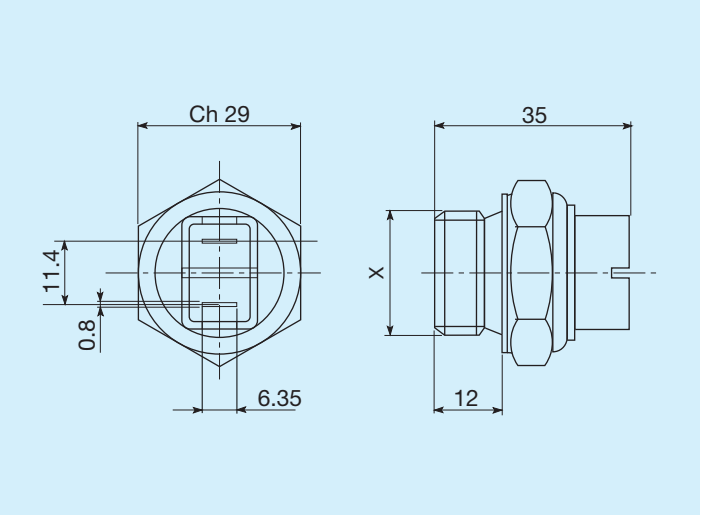

Trigger temperature C°	Threading	Code
45 - 35	M22x1.5	FR361104535R
60 - 50	M22x1.5	FR361106050R
80 - 70	M22x1.5	FR361108070R
82 - 68	M22x1.5	FR361108268R
85 - 76	M22x1.5	FR361108576R

IP54 protected thermal switch

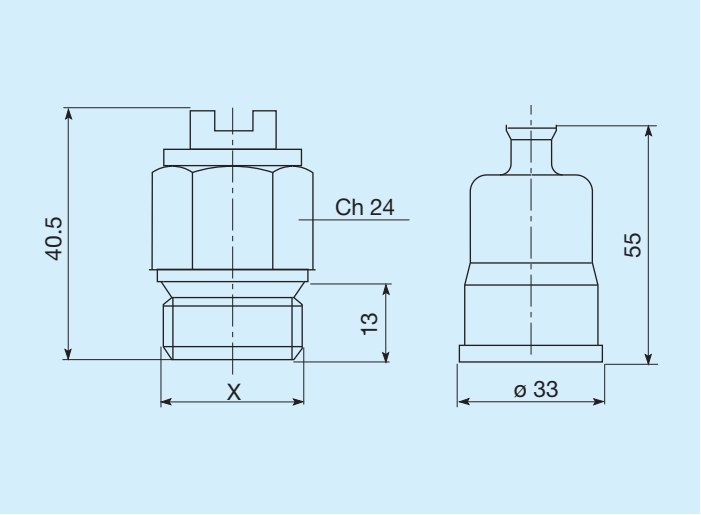

Trigger temperature C°	Threading	Code
45 - 35	M22x1.5	FR361124535R
50 - 40	M22x1.5	FR361125040R
60 - 50	M22x1.5	FR361126050R
70 - 60	M22x1.5	FR361127060R
80 -70	M22x1.5	FR361128070R

IP65 protected thermal switch

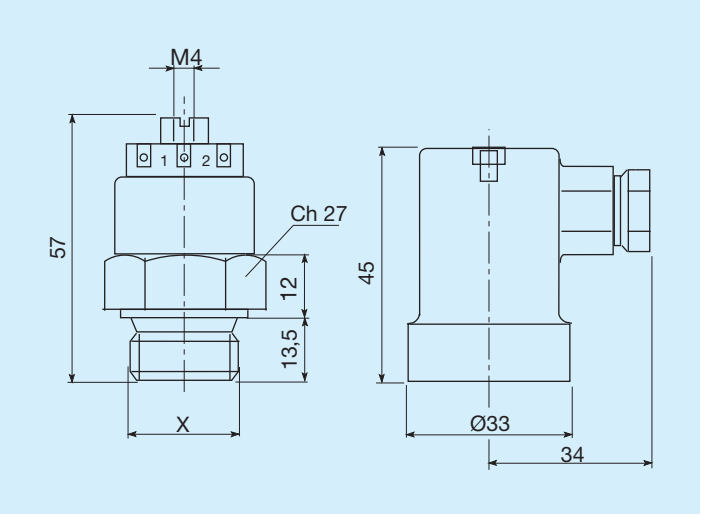

Trigger temperature C°	Threading	Code
45 - 35	M22x1.5	FR361154535R
47 - 36	M22x1.5	FR361155040R
60 - 50	M22x1.5	FR361156050R
80 - 70	M22x1.5	FR361158070R