
BONDIOLI & PAVESI

Contents

Electronic control units

Introduction

The electronic control units (ECU) allow to monitor and manage different types of applications in the hydraulic field.

Thanks to specific algorithms, Bondioli & Pavesi ECUs acquire information on the state of the system and carry out corrective measures and actions necessary to guarantee certain functions. These can be related to safety requirements, generic control strategies or specific customer requirements.

The management of inputs and outputs can be implemented in various systems of pre-existing interconnected components.

Diagnostic functions are available on all models such as the detection of electrical disconnections, short circuits, open circuits, but also the monitoring of outputs and the signalling of alarms.

The outputs, with double activation consent, return current feedback and are available in version on/off or PWM.

The ECUTuner application software is also available for configuring the parameters during calibration and checking the diagnoses on the system. The interface is intuitive and can be set at different access levels.

HPEE55 Series
Standard applications

Prior to use, carefully read the GENERAL INSTRUCTIONS FOR USE OF ELECTRONIC CONTROL UNITS

Dimensions

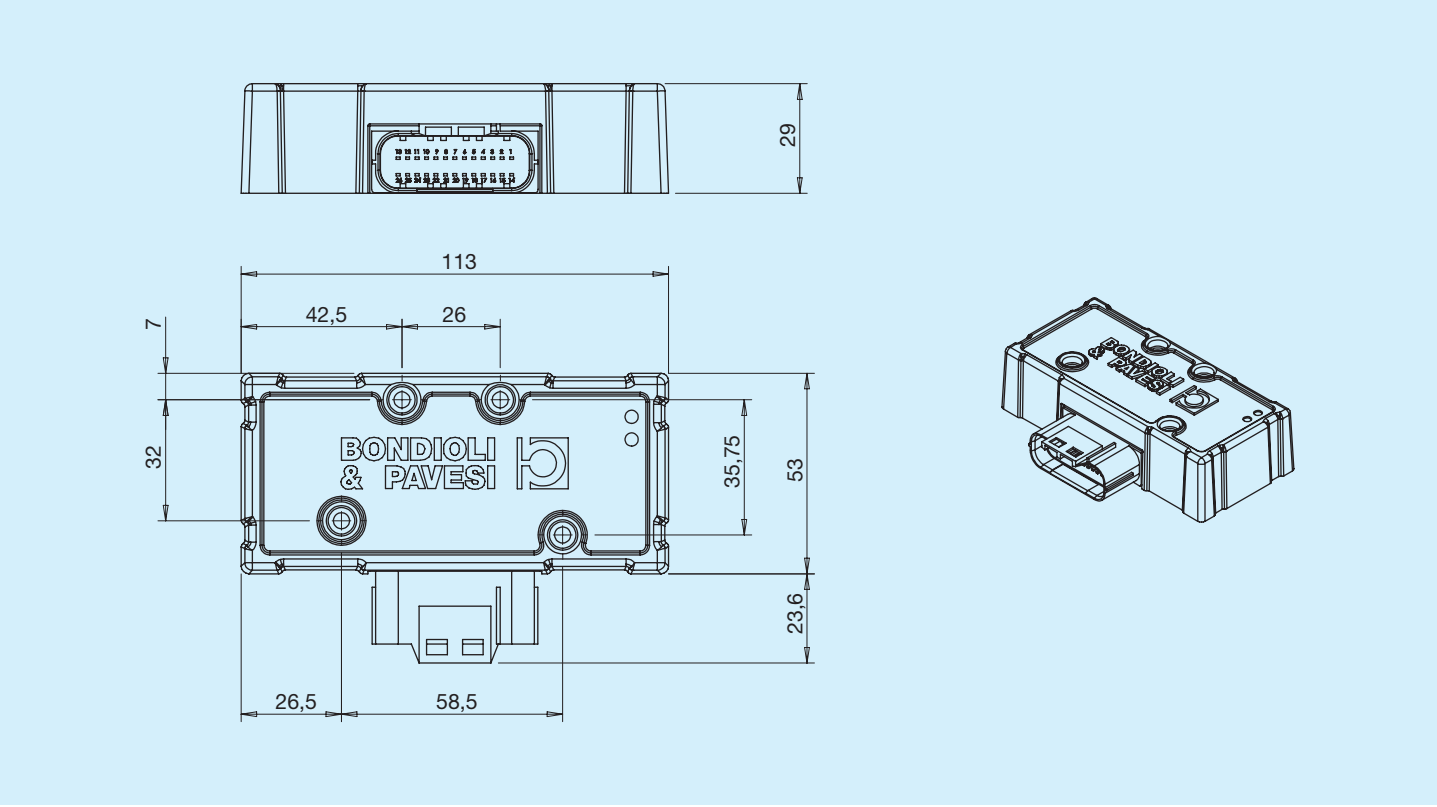

Electrical and electronic characteristics

Power supply		**9 - 32 Vdc**
Current consumption	**Standby** **Maximum current on one channel** **Maximum total current**	**80 mA** **3 A @ 12 Vdc** **2 A @ 24 Vdc** **4 A @ 12 Vdc** **3 A @ 24 Vdc**
Sensor power supply +5V		**2; (5 ± 0.25) V; 100 mA**
Main microcontroller		**8 bit – 32 MHz**
Safety microcontroller		**no**
Safety Integrity Level / Performance Level / Agricultural Performance Level (IEC 61508 / UNI EN ISO 13849 / UNI EN ISO 25119)		**SIL 1 / PL C / AgPL C**
Electromagnetic Compatibility (EMC)	**According to the standards:**	**ISO 13766** **ISO 7637** **ISO 11452** **ISO 14982**
CAN BUS connection		**1 CAN 2.0B, ISO11898**
RS232 connection		**1**
Connector		**JAE 26-way - counterpart HPECNS00700**

Input

Type	N°	Activation	Frequency
Digital	4	VBatt+	-
Frequential	2	GND	10kHz max

Type	N°	Range
Analogue	2	0-5Vdc 0-10Vdc 0-20mA

Output

Type	N°
Digital / PWM	4 (2 combinable current feedbacks)
PWM output frequency	100 - 400 Hz

Mechanical and environmental characteristics

Operating temperature	**(-25 ... 85) °C (-13 / 185 °F)**
Storage temperature	**(-40 ... 85) °C (-40 / 185 °F)**
Protection index*	**IP67**
Resistance to vibration	**UNI EN 60068-2-6**
Shock resistance	**ISO 15003, section 5.5.2 level 3**

* With correctly fixed connector
The unused pins must be suitably plugged.

HPEE69 Series
Standard and safety relevant applications

Prior to use, carefully read the GENERAL INSTRUCTIONS FOR USE OF ELECTRONIC CONTROL UNITS

Dimensions

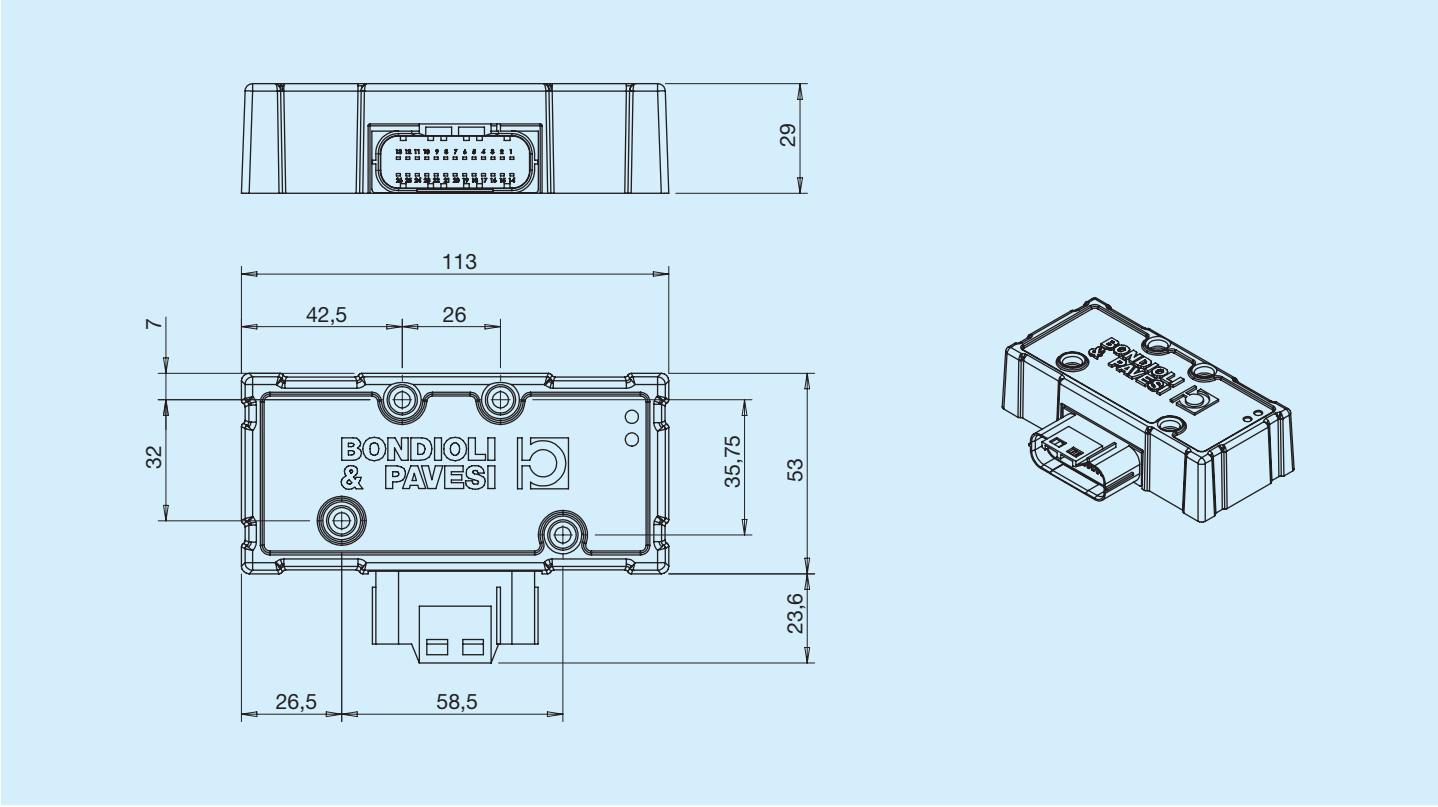

Electrical and electronic characteristics

Rated voltage		**9 - 32 Vdc**
Current consumption	**Standby** **Maximum current on one channel** **Maximum total current**	**80mA** **3A @ 12Vdc** **2A @ 24Vdc** **4A @ 12Vdc** **3A @ 24Vdc**
Sensor power supply +5 V		**2; (5 +/- 0.25) V; 100mA**
Main microcontroller		**8bit – 32MHz**
Safety microcontroller		**8bit – 16MHz**
Safety Integrity Level / Performance Level / Agricultural Performance Level (IEC 61508 / UNI EN ISO 13849 / UNI EN ISO 25119)		**SIL 2 / PL D / AgPL D**
CAN BUS connection		**1 CAN 2.0 B, ISO11898**
RS232 connection		**1**
Electromagnetic compatibility	**According to the standards:**	**ISO13766** **ISO7637** **ISO11452** **ISO14982**
Connector		**JAE 26-way - counterpart HPECNS00700**

Input

Type	N°	Activation	Frequency
Digital	4	VBatt+	-
Frequential	2	GND	10kHz

Type	N°	Range
Analogue	2	0-5Vdc 0-10Vdc 0-20mA

Output

Type	N°
PWM digital outputs	4 (2 combinable current feedbacks)
PWM output frequency	100 - 400 Hz

Standard Functional safety

ISO 25119 - parts 1, 2, 3 and 4: 2019
UNI EN ISO 13849 - part 1: 2016, part 2: 2013

Mechanical and environmental characteristics

Operating temperature	**(-25 ... 85) °C (-13 / 185 °F)**
Storage temperature	**(-40 ... 85) °C (-40 / 185 °F)**
Protection index*	**IP67**
Conforms to vibrations UNI EN 60068-2-6	**Yes**
Conforms to mechanical shocks ISO 15003, par. 5.5.2 level 3	**Yes**

* With correctly fixed connector
The unused pins must be suitably plugged.

HPEE70 Series
Standard and safety relevant applications with multiple frequency inputs

Prior to use, carefully read the GENERAL INSTRUCTIONS FOR USE OF ELECTRONIC CONTROL UNITS

Dimensions

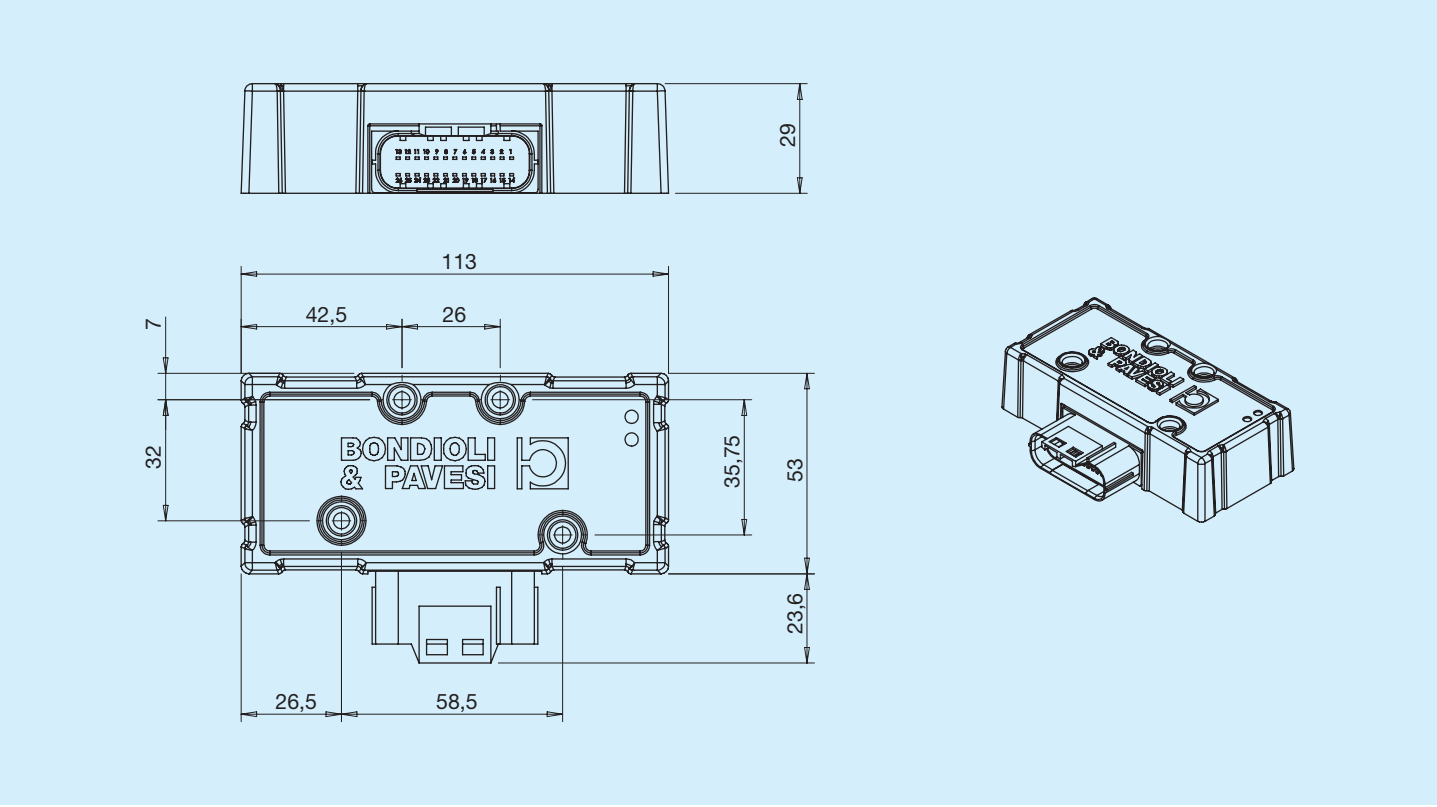

Electrical and electronic characteristics

Rated voltage		**9 - 32 Vdc**
Current consumption	**Standby** **Maximum current on one channel** **Maximum total current**	**80mA** **3A @ 12Vdc** **2A @ 24Vdc** **4A @ 12Vdc** **3A @ 24Vdc**
Sensor power supply +5 V		**2; (5 +/- 0.25) V; 100mA**
Main microcontroller		**8bit – 32MHz**
Safety microcontroller		**8bit – 16MHz**
Safety Integrity Level / Performance Level / Agricultural Performance Level (IEC 61508 / UNI EN ISO 13849 / UNI EN ISO 25119)		**SIL 2 / PL D / AgPL D**
CAN BUS connection		**1 CAN 2.0 B, ISO11898**
RS232 connection		**1**
Electromagnetic compatibility	**According to the standards:**	**ISO13766** **ISO7637** **ISO11452** **ISO14982**
Connector		**JAE 26-way - counterpart HPECNS00700**

Input

Type	N°	Activation	Frequency
Digital	3	VBatt+	-
Frequential	2	GND	10kHz
	1	GND	500Hz

Type	N°	Range
Analogue	2	0-5Vdc 0-10Vdc 0-20mA

Output

Type	N°
PWM digital outputs	4
PWM output frequency	100 - 400 Hz

Standard Functional safety

ISO 25119 - parts 1, 2, 3 and 4: 2019
UNI EN ISO 13849 - part 1: 2016, part 2: 2013

Mechanical and environmental characteristics

Operating temperature	**(-25 ... 85) °C (-13 / 185 °F)**
Storage temperature	**(-40 ... 85) °C (-40 / 185 °F)**
Protection index*	**IP67**
Conforms to vibrations UNI EN 60068-2-6	**Yes**
Conforms to mechanical shocks ISO 15003, par. 5.5.2 level 3	**Yes**

* With correctly fixed connector
The unused pins must be suitably plugged.

HPEE77 Series
Standard and safety relevant applications - high power outputs

Prior to use, carefully read the GENERAL INSTRUCTIONS FOR USE OF ELECTRONIC CONTROL UNITS

Dimensions

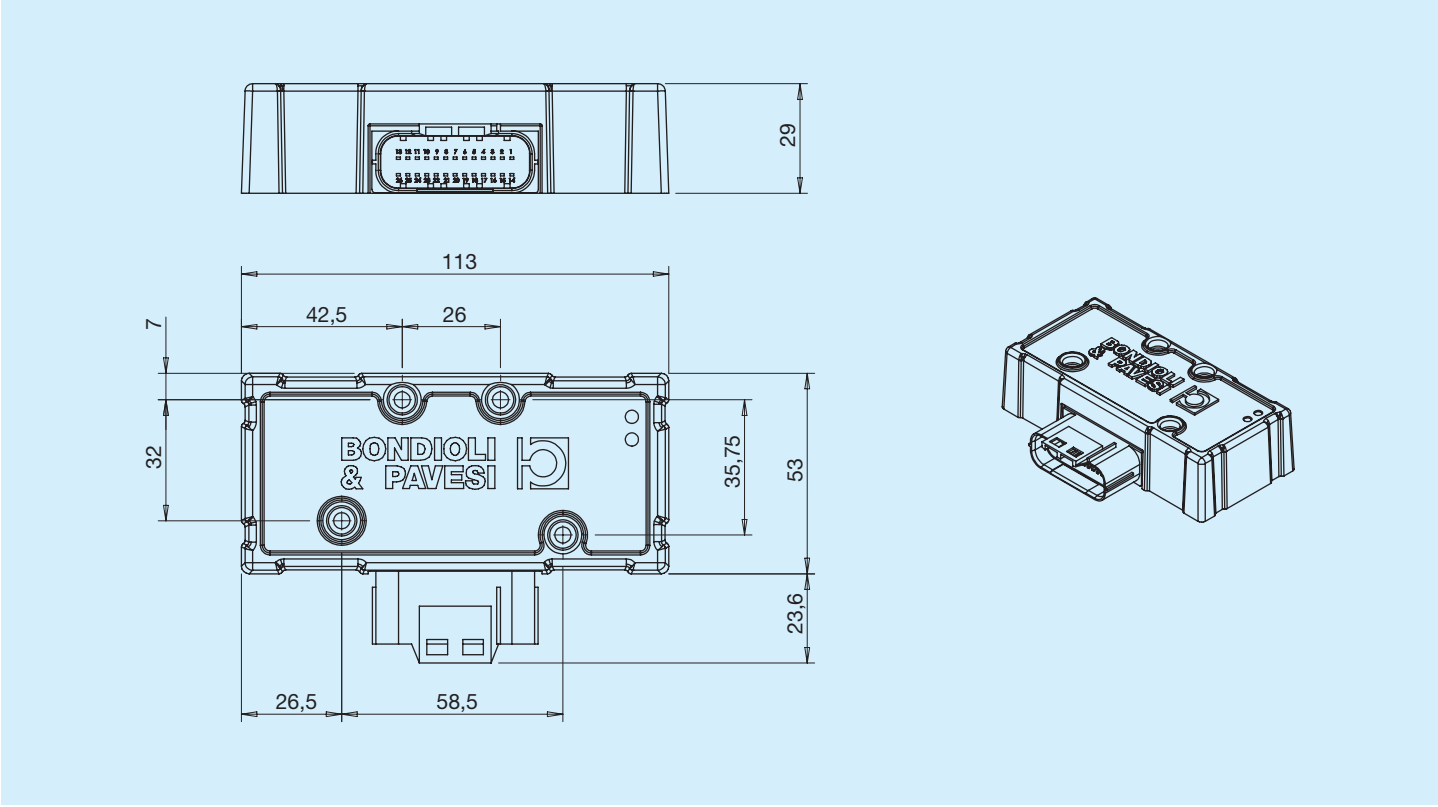

Electrical and electronic characteristics

Rated voltage		**9 - 32 Vdc**
Current consumption	**Standby** **Maximum current on one channel** **Maximum total current**	**80mA** **6A @ 12Vdc** **4A @ 24Vdc** **6A @ 12Vdc** **4A @ 24Vdc**
Sensor power supply +5 V		**2; (5 +/- 0.25) V; 100mA**
Main microcontroller		**8bit – 32MHz**
Safety microcontroller		**8bit – 16MHz**
Safety Integrity Level / Performance Level / Agricultural Performance Level (IEC 61508 / UNI EN ISO 13849 / UNI EN ISO 25119)		**SIL 2 / PL D / AgPL D**
CAN BUS connection		**1 CAN 2.0 B, ISO11898**
RS232 connection		**1**
Electromagnetic compatibility	**According to the standards:**	**ISO13766** **ISO7637** **ISO11452** **ISO14982**
Connector		**JAE 26-way - counterpart HPECNS00700**

Input

Type	N°	Activation	Frequency
Digital	4	VBatt+	-
Frequential	2	GND	10kHz

Type	N°	Range
Analogue	2	0-5Vdc 0-10Vdc 0-20mA

Output

Type	N°
PWM digital outputs	4
PWM output frequency	100 - 400 Hz

Standard Functional safety

ISO 25119 - parts 1, 2, 3 and 4: 2019
UNI EN ISO 13849 - part 1: 2016, part 2: 2013

Mechanical and environmental characteristics

Operating temperature	**(-25 ... 85) °C (-13 / 185 °F)**
Storage temperature	**(-40 ... 85) °C (-40 / 185 °F)**
Protection index*	**IP67**
Conforms to vibrations UNI EN 60068-2-6	**Yes**
Conforms to mechanical shocks ISO 15003, par. 5.5.2 level 3	**Yes**

* With correctly fixed connector
The unused pins must be suitably plugged.

HPEESF Series
For brushless electric fans

Prior to use, carefully read the GENERAL INSTRUCTIONS FOR USE OF ELECTRONIC CONTROL UNITS

Dimensions

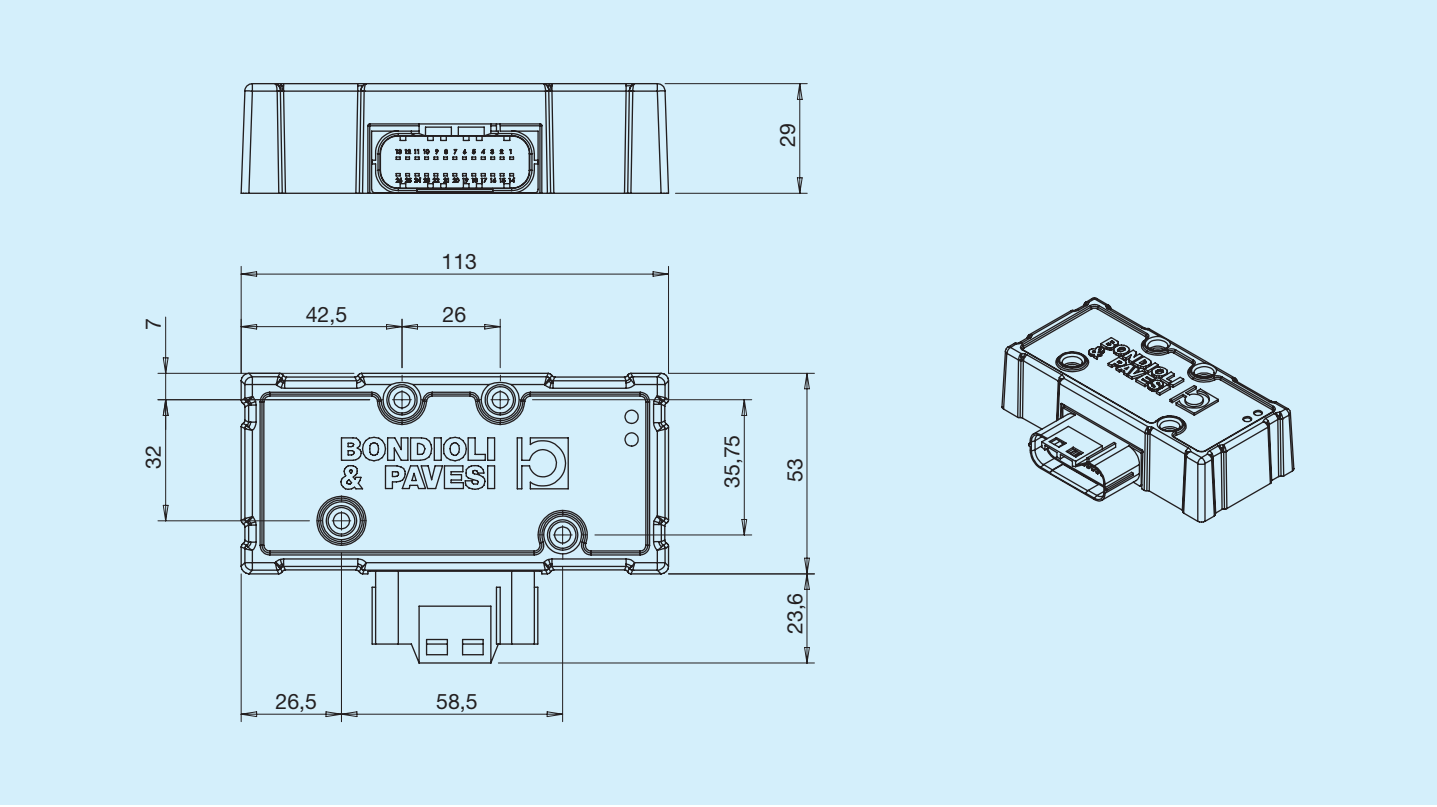

Electrical and electronic characteristics

Rated voltage		**9 - 32 Vdc**
Current consumption	**Standby** **Maximum current PWM low side driver** **Maximum total current**	**40mA** **100mA @ 12 Vdc** **100mA @ 24Vdc** **450mA @ 12Vdc** **450mA @ 24Vdc**
Sensor power supply +5 V		**no**
Main microcontroller		**8bit – 32MHz**
Safety microcontroller		**no**
Safety Integrity Level / Performance Level / Agricultural Performance Level (IEC 61508 / UNI EN ISO 13849 / UNI EN ISO 25119)		**SIL 1 / PL C / AgPL C**
CAN BUS connection		**1 CAN 2.0 B, ISO11898**
RS232 connection		**1**
Electromagnetic compatibility	**According to the standards:**	**ISO13766** **ISO7637** **ISO11452** **ISO14982**
Connectors		**JAE 26-way - counterpart HPECNS00700**

Input

Type	N°	Activation	Frequency
Digital	3	VBatt+	-
Frequential	2	GND	10kHz

Type	N°	Range
Analogue	4	0-5Vdc 0-20mA RHEO

Output

Type	N°
Low side driver PWM digital outputs	4
PWM output frequency	100 - 400Hz

Mechanical and environmental characteristics

Operating temperature	**(-25 ... 85) °C (-13 / 185 °F)**
Storage temperature	**(-40 ... 85) °C (-40 / 185 °F)**
Protection index*	**IP67**
Conforms to vibrations UNI EN 60068-2-6	**Yes**
Conforms to mechanical shocks ISO 15003, par. 5.5.2 level 3	**Yes**

* With correctly fixed connector
The unused pins must be suitably plugged.

HPEESH Series
For hydraulic systems with on-off and proportional valves

Prior to use, carefully read the GENERAL INSTRUCTIONS FOR USE OF ELECTRONIC CONTROL UNITS

Dimensions

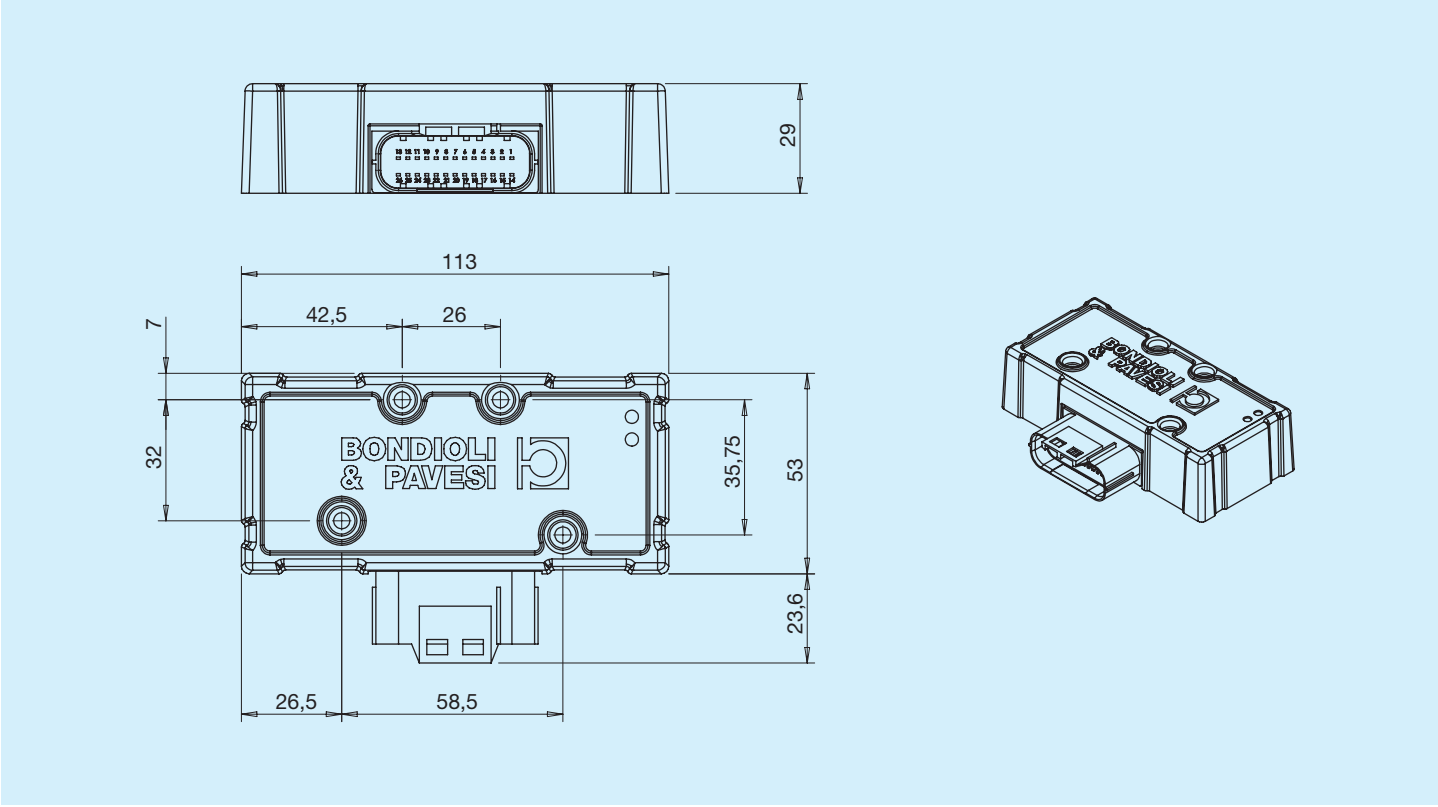

Electrical and electronic characteristics

Rated voltage		**9 - 32 Vdc**
Current consumption	**Standby** **Maximum current PWM low side driver** **Maximum current PWM high side driver** **Maximum total current**	**40mA** **100mA @ 12Vdc** **100mA @ 24Vdc** **3A @ 12Vdc** **2A @ 24Vdc** **4A @ 12Vdc** **3A @ 24Vdc**
Sensor power supply +5 V		**no**
Main microcontroller		**8bit – 32MHz**
Safety microcontroller		**no**
Safety Integrity Level / Performance Level / Agricultural Performance Level (IEC 61508 / UNI EN ISO 13849 / UNI EN ISO 25119)		**SIL 1 / PL C / AgPL C**
CAN BUS connection		**1 CAN 2.0 B, ISO11898**
RS232 connection		**1**
Electromagnetic compatibility	**According to the standards:**	**ISO 13766** **ISO7637** **ISO11452** **ISO14982**
Connectors		**JAE 26-way - counterpart HPECNS00700**

Input

Type	N°	Activation	Frequency
Digital	1	VBatt+	-
Frequential	2	GND	10kHz
Analogue	4	0-5Vdc	RHEO

Type	N°	Range
Analogue	4	0-5Vdc RHEO

Output

Type	N°
PWM digital outputs high side driver high power	2 (current feedback)
PWM digital outputs low side driver low power	2
PWM output frequency	100 - 400Hz

Mechanical and environmental characteristics

Operating temperature	**(-25 ... 85) °C (-13 / 185 °F)**
Storage temperature	**(-40 ... 85) °C (-40 / 185 °F)**
Protection index*	**IP67**
Conforms to vibrations UNI EN 60068-2-6	**Yes**
Conforms to mechanical shocks ISO 15003, par. 5.5.2 level 3	**Yes**

* With correctly fixed connector
The unused pins must be suitably plugged.

HPEEO6D00000001001
Discrete logic output expansion

Prior to use, carefully read the GENERAL INSTRUCTIONS FOR USE OF ELECTRONIC CONTROL UNITS

Dimensions

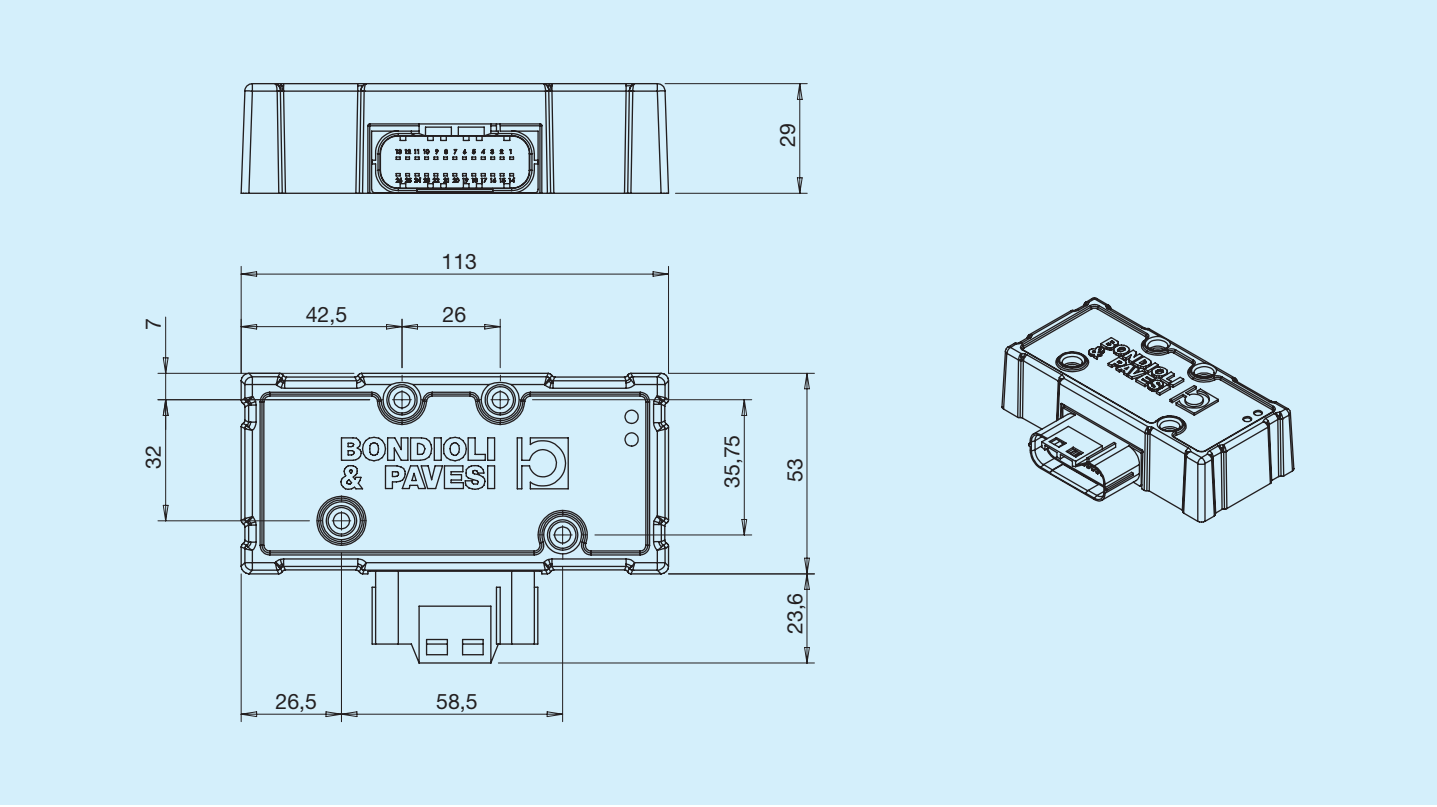

Electrical and electronic characteristics

Rated voltage		**9 - 32 Vdc**
Current consumption	**Standby** **Maximum current on one channel** **Maximum total current** **Minimum load current**	**80mA** **3A @ 12Vdc** **2A @ 24Vdc** **9A @ 12Vdc** **6A @ 24Vdc** **0.02 A**
Sensor power supply +5 V		**no**
Main microcontroller		**none**
Safety microcontroller		**no**
Safety Integrity Level / Performance Level / Agricultural Performance Level (IEC 61508 / UNI EN ISO 13849 / UNI EN ISO 25119)		**SIL 2 / PL D / AgPL D**
CAN BUS connection		**no**
RS232 connection		**no**
Electromagnetic compatibility	**According to the standards:**	**ISO13766** **ISO7637** **ISO11452** **ISO14982**
Connector		**JAE 26-way - counterpart HPECNS00700**

Input

Type	N°	Activation	Frequency
Digital	6	VBatt+	-

Output

Type	N°
Digital outputs	6

Mechanical and environmental characteristics

Operating temperature	**(-25 ... 85) °C (-13 / 185 °F)**
Storage temperature	**(-40 ... 85) °C (-40 / 185 °F)**
Protection index*	**IP67**
Conforms to vibrations UNI EN 60068-2-6	**Yes**
Conforms to mechanical shocks ISO 15003, par. 5.5.2 level 3	**Yes**

* With correctly fixed connector
The unused pins must be suitably plugged.

General purpose for safety relevant applications

Prior to use, carefully read the GENERAL INSTRUCTIONS FOR USE OF ELECTRONIC CONTROL UNITS

Dimensions

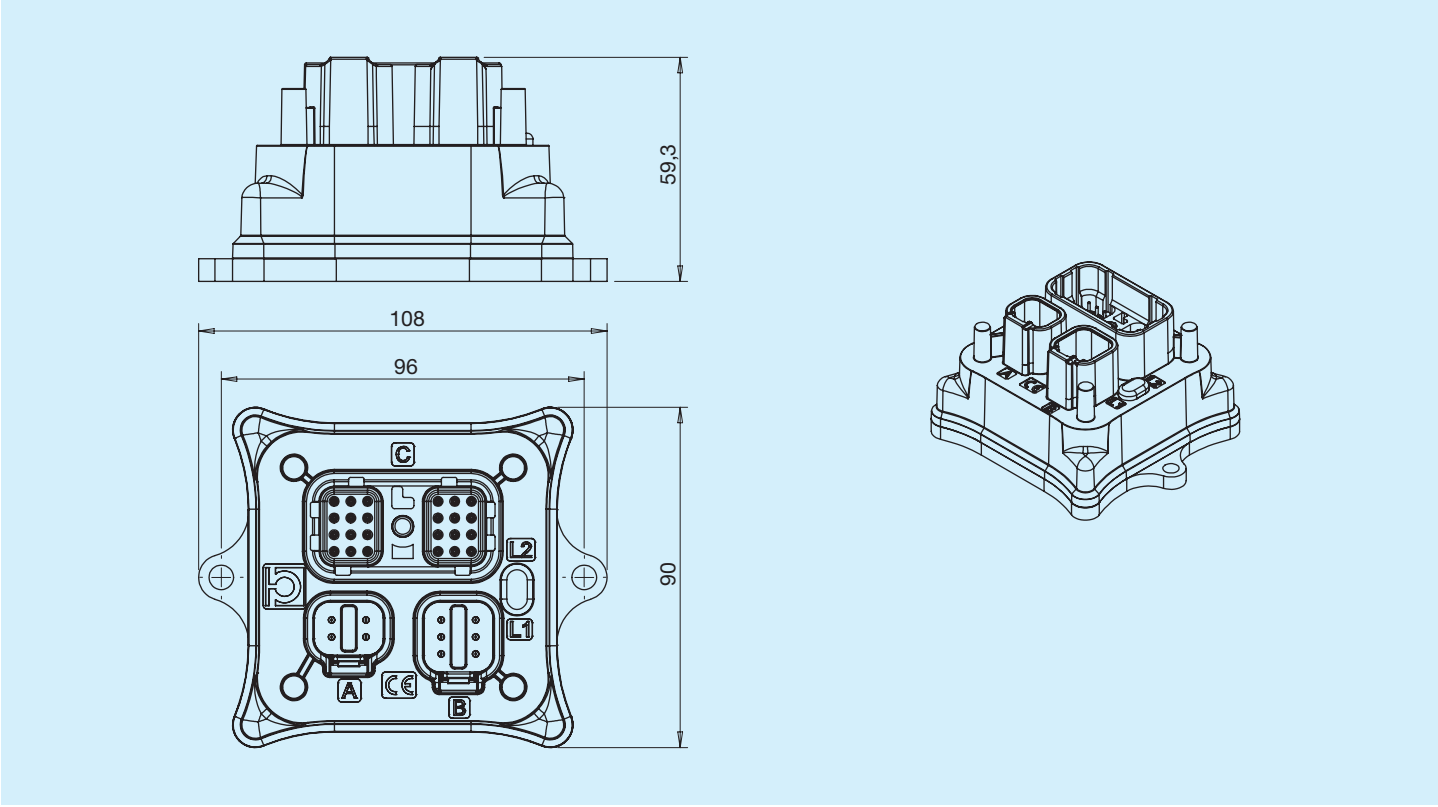

Electrical and electronic characteristics

Rated voltage		**8-32Vdc**
Current consumption	**Standby**	**40mA @ 12Vdc** **25mA @ 24Vdc**
	Maximum current on one channel	**3A @ 12Vdc** **3A @ 24Vdc**
	Maximum total current	**9A @ 12Vdc** **9A @ 24Vdc**
Sensor power supply +5 V		**1; (5 +/- 0.125) V; 300mA**
Main microcontroller		**ARM Cortex; 32bit - 72MHz**
Safety microcontroller		**8bit - 32MHz**
Safety Integrity Level / Performance Level / Agricultural Performance Level (IEC 61508 / UNI EN ISO 13849 / UNI EN ISO 25119)		**SIL 2 / PL D / AgPL D**
CAN BUS connection		**2 CAN 2.0 B, ISO11898**
RS232 connection		**No**
Electromagnetic compatibility	**According to the standards:**	**ISO13766** **ISO7637** **ISO11452** **ISO14982**
Connectors		**DT6-4S, DT06-6S, DRC26-24SA - counterpart HPEAKITCONNSSPSP**

Input

Type	N°	Voltage	Frequency
Digital / Frequential	6	VBatt+	0-10kHz
Analogue	6	0-5Vdc 0-10Vdc 4-20mA	RHEO

Type	N°	Range
Analogue	6	0-5Vdc 0-10Vdc 4-20mA RHEO

Output

Type	N°
PWM digital outputs	8
PWM output frequency	100Hz - 1kHz

Standard Functional safety

ISO 25119 - parts 1, 2, 3 and 4: 2019
UNI EN ISO 13849 - part 1: 2016, part 2: 2013

Mechanical and environmental characteristics

Operating temperature	**(-25 ... 85) °C (-13 / 185 °F)**
Storage temperature	**(-40 ... 85) °C (-40 / 185 °F)**
Protection index*	**IP67**
Conforms to vibrations UNI EN 60068-2-6	**Yes**
Conforms to mechanical shocks ISO 15003, par. 5.5.2 level 3	**Yes**

* With correctly fixed connector
The unused pins must be suitably plugged.

Connectors and Wiring

Prior to use, carefully read the GENERAL INSTRUCTIONS FOR USE OF ELECTRONIC CONTROL UNITS

JAE 26-way connector kit HPECNS00700 - For SMAT series

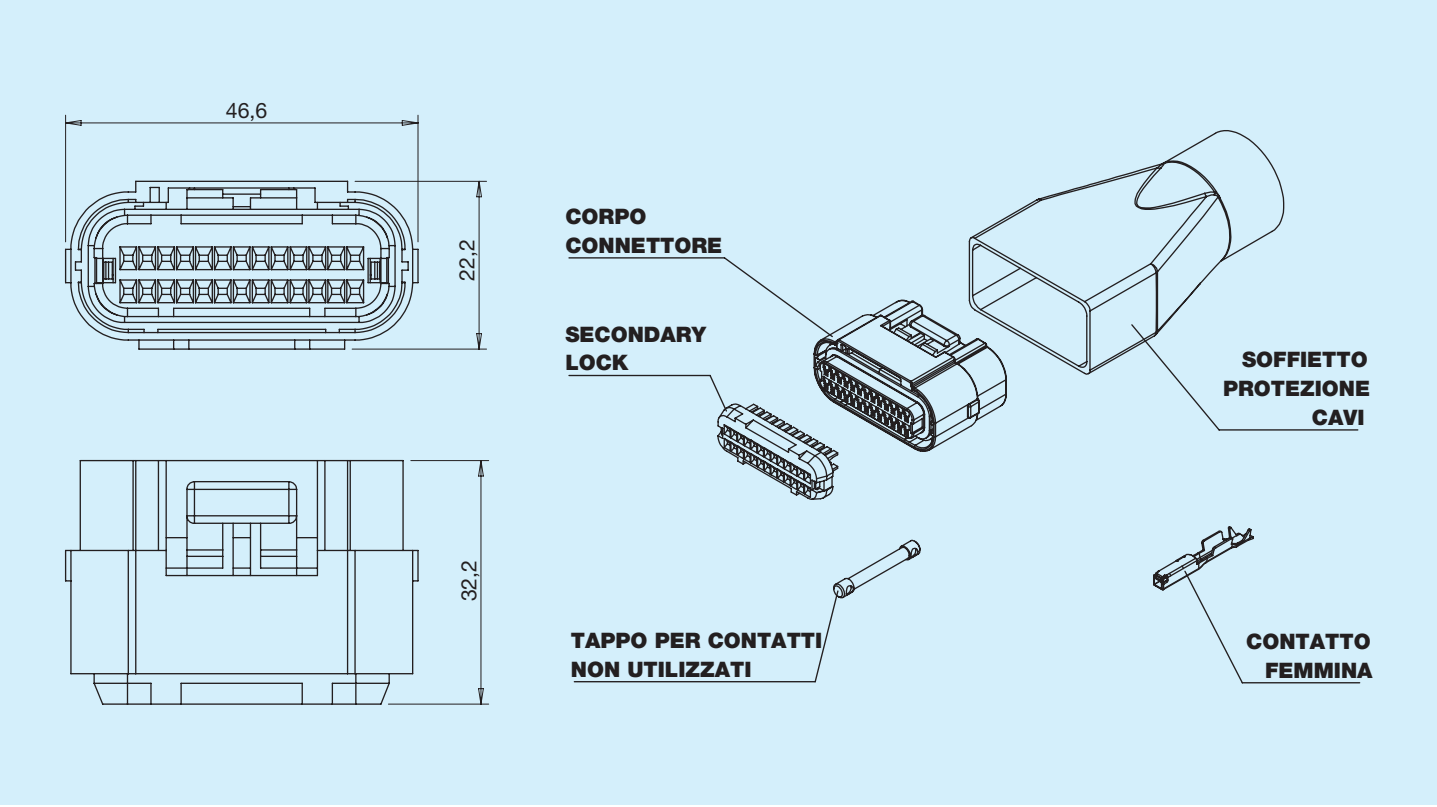

Connector kit composition

Quantity	Description
1	Connector body
1	Secondary lock
30	Female contacts
15	Plugs for unused contacts
1	Cable protection bellows

Connectors DT06-4S, DT06-6S, DRC26-

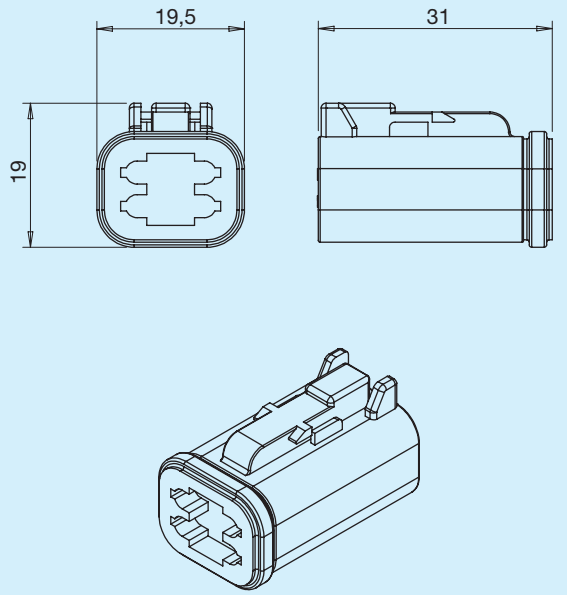

DT06-4S

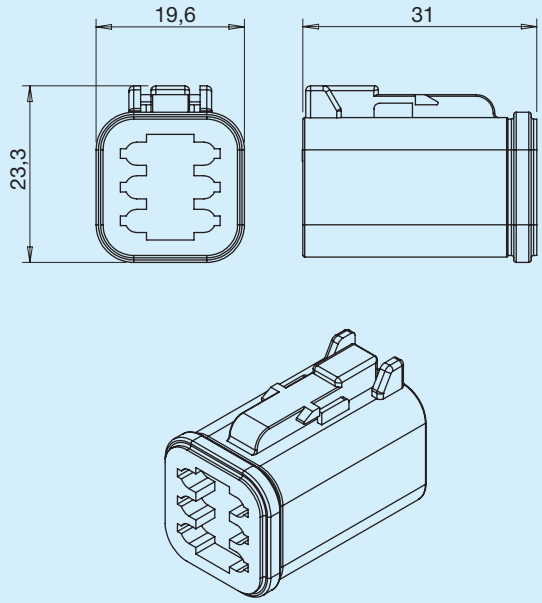

DT06-6S

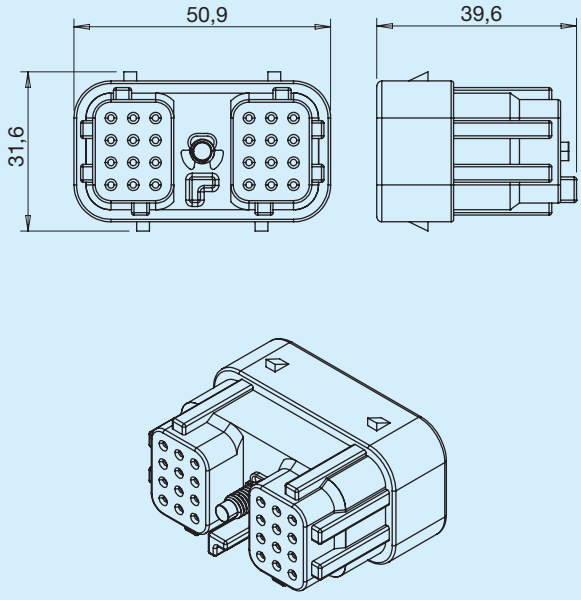

DRC26-24SA

Connector kit composition

Quantity	Description
5	Deutsch type 1 blanking plugs
10	Deutsch type 2 blanking plugs
12	Deutsch type 1 female contacts
25	Deutsch type 2 female contacts
1	24-way Deutsch DRC series male connector
1	6-way Deutsch DT series male connector
1	4-way Deutsch DT series male connector
1	Deutsch cover for 24-way male connector
1	Deutsch cover for 6-way male connector
1	Deutsch cover for 4-way male connector
1	Contact block for 6-way male connector
1	Contact block for 4-way male connector
1	Extraction tool

Electrical wiring HPE5WHSMA025R - Typical use: SMAT55 - SMAT69

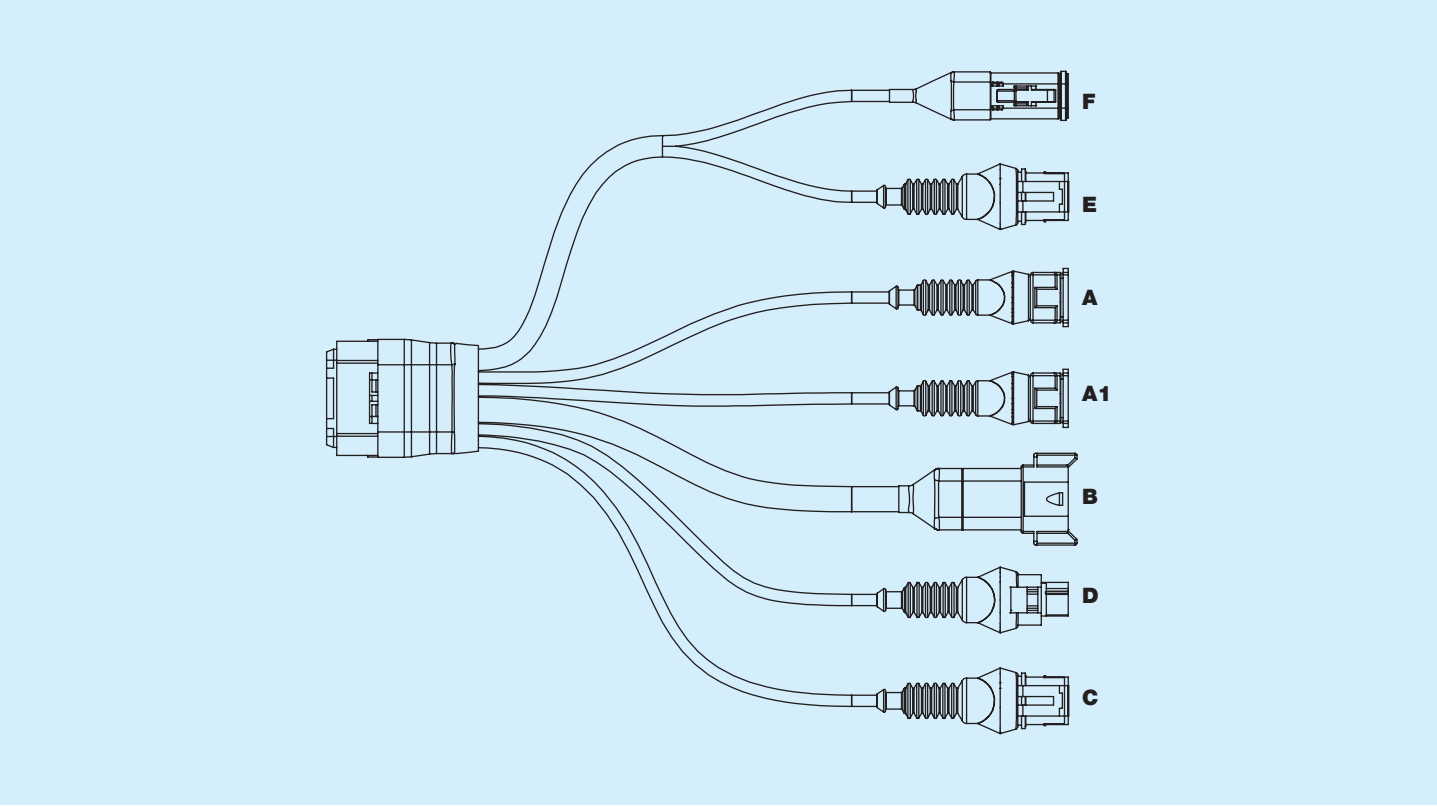

Connector	Function	Type	Length*
OUT F	**Motor pressure sensor**	Deutsch 4-way (DT06-4S)	1100 ± 20 cm
OUT E	**Motor RPM sensor**	AMP Sseal 3-way (socket)	900 ± 20 cm
OUT A	**Proportional valve A**	AMP JT 2-way (pin) seal version	400 ± 10 cm
OUT A1	**Proportional valve B**	AMP JT 2-way (pin) seal version	400 ± 10 cm
OUT B	**External connection**	Deutsch 8-way (DT04-08PA)	300 ± 10 cm
OUT D	**Pump angle sensor**	MCON 3-way (socket)	550 ± 10 cm
OUT C	**Pump RPM sensor**	AMP Sseal 3-way (socket)	300 ± 10 cm

* from the two ends of the connector

Electrical wiring HPE5WHSMA061R - Typical use: SMAT70

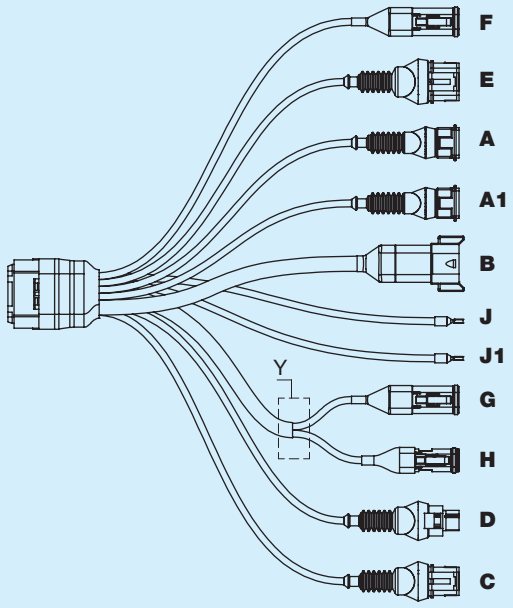

Y - Corrugated or heat-shrink plastic connection

Connector	Function	Type	Length*
OUT F	**Motor pressure sensor**	Deutsch 4-way (DT06-4S)	1400 ± 20 cm
OUT E	**Motor RPM sensor**	AMP Sseal 4-way (socket)	600 ± 20 cm
OUT A	**Proportional valve A**	AMP JT 2-way (pin) seal version	400 ± 10 cm
OUT A1	**Proportional valve B**	AMP JT 2-way (pin) seal version	400 ± 10 cm
OUT B	**External connection**	Deutsch 8-way (DT04-08PA)	300 ± 10 cm
OUT J	**GND**	Atum heat-shrink	300 ± 10 cm
OUT J1	**VBatt+**	Atum heat-shrink	300 ± 10 cm
OUT G	**Supply pressure**	Deutsch 4-way (DT06-4S)	1200 ± 20 cm
OUT H	**Brake valve**	Deutsch 2-way (DT06-2S)	1200 ± 20 cm
OUT D	**Pump angle sensor**	MCON 3-way (socket)	650 ± 10 cm
OUT C	**Pump RPM sensor**	AMP Sseal 3-way (socket)	300 ± 10 cm

* from the two ends of the connector

Electrical wiring HPE5WHSMA045R - GENERAL PURPOSE

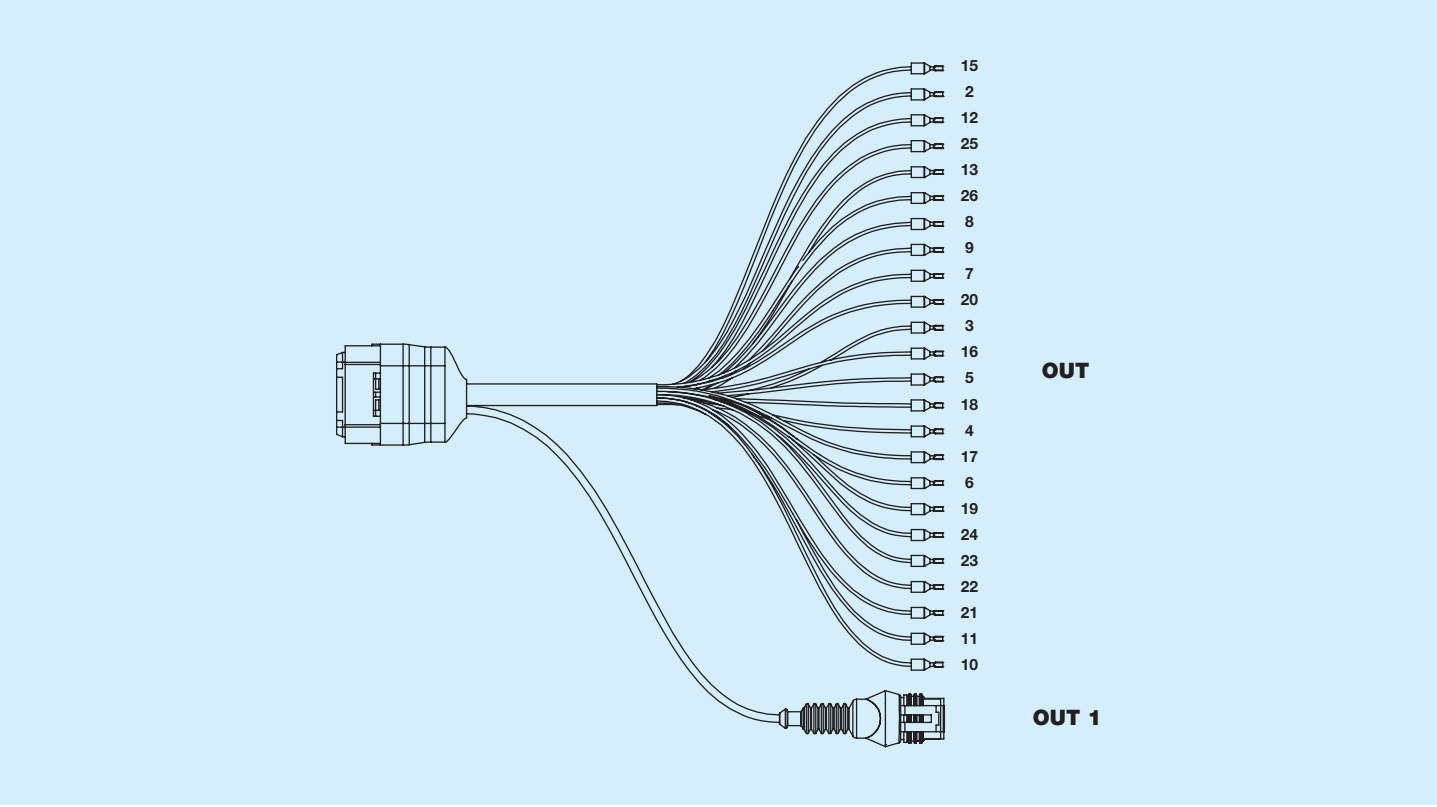

Connector	Function	Type	Length*
OUT			
Commont part			100 ± 3 cm
15	CAN communication H	Free terminal	30 ± 2 cm
2	CAN communication L	Free terminal	30 ± 2 cm
12	Power supply +	Free terminal	30 ± 2 cm
25	Power supply +	Free terminal	30 ± 2 cm
13	Power supply -	Free terminal	30 ± 2 cm
26	Power supply -	Free terminal	30 ± 2 cm
8	Sensor power supply +	Free terminal	30 ± 2 cm
9	Sensor power supply +	Free terminal	30 ± 2 cm
7	Sensor power supply -	Free terminal	30 ± 2 cm
20	Sensor power supply -	Free terminal	30 ± 2 cm
3	Analogue input 0	Free terminal	30 ± 2 cm
16	Analogue input 1	Free terminal	30 ± 2 cm
5	Digital input 0	Free terminal	30 ± 2 cm
18	Digital input 1	Free terminal	30 ± 2 cm
4	Digital input 2	Free terminal	30 ± 2 cm
17	Digital input 3	Free terminal	30 ± 2 cm
6	Frequency input 0	Free terminal	30 ± 2 cm
19	Frequency input 1	Free terminal	30 ± 2 cm
24	Digital output 0	Free terminal	30 ± 2 cm
23	Digital output 1	Free terminal	30 ± 2 cm
22	Digital output 2	Free terminal	30 ± 2 cm
21	Digital output 3	Free terminal	30 ± 2 cm
11	Current feedback 0	Free terminal	30 ± 2 cm
10	Current feedback 1	Free terminal	30 ± 2 cm
OUT 1	RS 232 communication	AMP Sseal 3-way (socket)	30 ± 2 cm

* from the two ends of the connector

Electrical wiring HPE5WHSMF002R - Typical use: SMAT-FAN

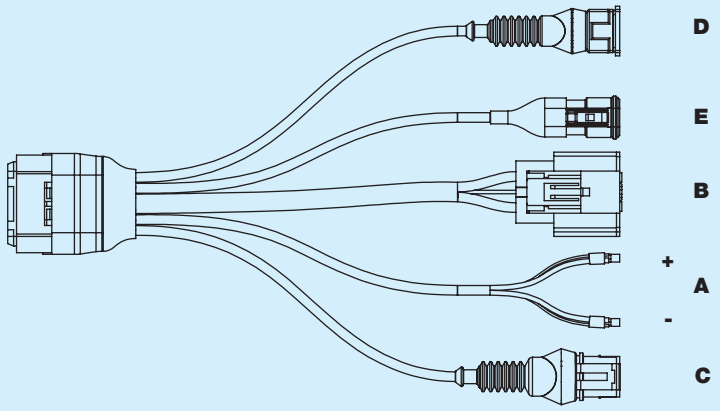

Connector	Function	Type	Length*
OUT A	**Power supply**	2 separate contacts for pos./neg.	100 ± 15 cm
OUT B	**Brushless fan**	Yazaki hybrid 4-way (pin)	100 ± 15 cm
OUT C	**RS 232 communication**	AMP Sseal 3-way (pin)	30 ± 15 cm
OUT D	**Temperature sensor**	AMP JT 2-way (pin) seal version	100 ± 15 cm
OUT E	**CAN Bus communication**	Deutsch 3-way (DT06-3S)	30 ± 15 cm

* from the two ends of the connector

Electrical wiring HPE5WHSPF003R - Typical use: SMAT POWER FAN

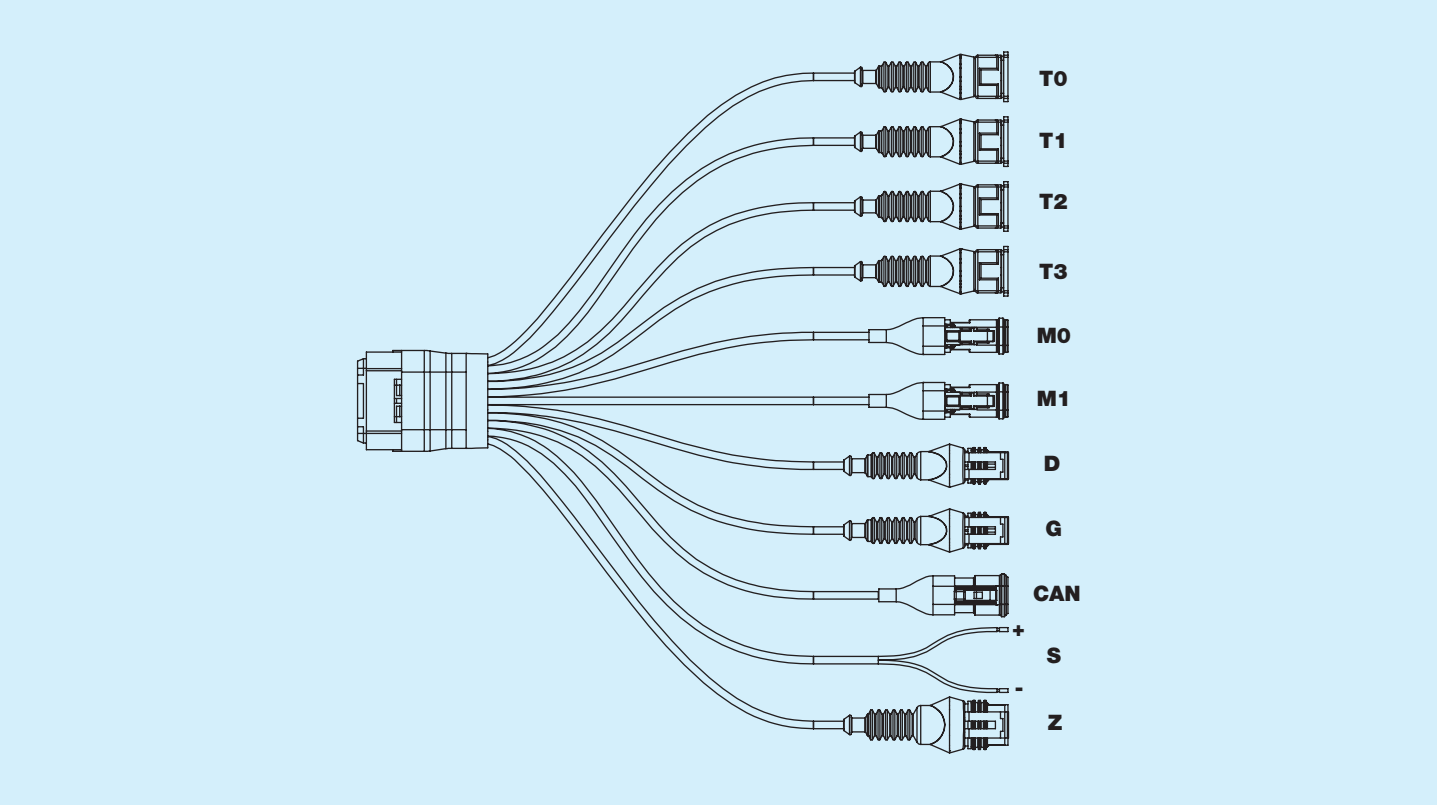

Connector	Function	Type	Lunghezza*
OUT T0	**Temperature sensor**	AMP JT 2-way (pin) seal version	200 ± 2 cm
OUT T1	**Temperature sensor**	AMP JT 2-way (pin) seal version	200 ± 2 cm
OUT T2	**Temperature sensor**	AMP JT 2-way (pin) seal version	200 ± 2 cm
OUT T3	**Temperature sensor**	AMP JT 2-way (pin) seal version	200 ± 2 cm
OUT M0	**Forward valve**	Deutsch 2-way (DT06-2S)	200 ± 2 cm
OUT M1	**Reverse valve**	Deutsch 2-way (DT06-2S)	200 ± 2 cm
OUT D	**Input (e.g.: reverse request)**	AMP Sseal 2-way (pin)	200 ± 2 cm
OUT G	**Output (e.g.: lamp output)**	AMP Sseal 2-way (pin)	200 ± 2 cm
OUT CAN	**CAN Bus communication**	Deutsch 3-way (DT06-3S)	200 ± 2 cm
OUT S	**Power supply**	2 separate contacts for pos./neg.	200 ± 2 cm
OUT Z	**RS 232 communication**	AMP Sseal 3-way (pin)	200 ± 2 cm

* from the two ends of the connector