Motori a pistoni assiali ad asse inclinato

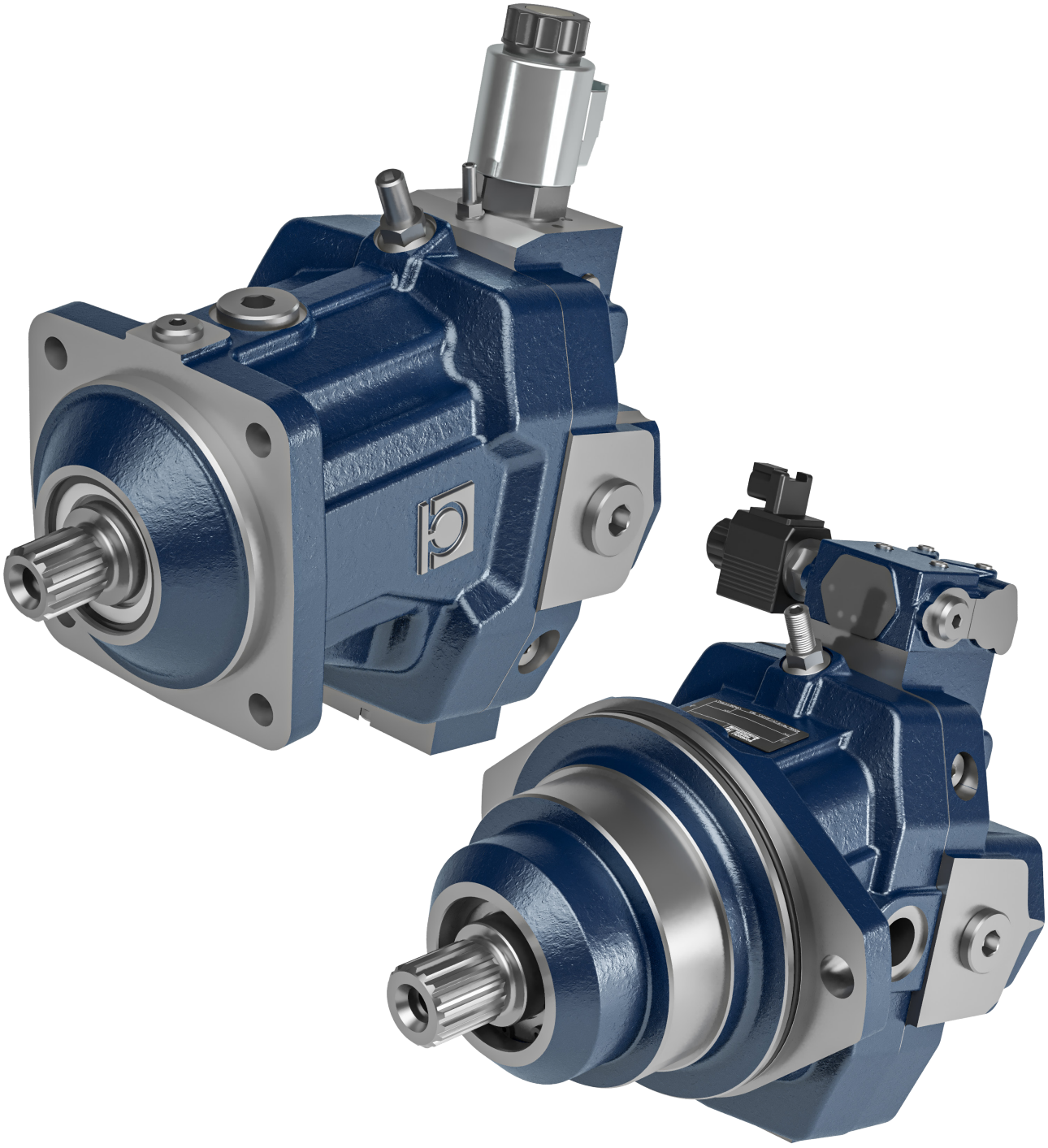

Indice

Introduzione	4
Ottimizzazione della durata dei cuscinetti nelle applicazioni con forze radiali	5
Applicazioni di forse assiali all'albero	7
HPBA 060-078	9
HPBA 080-108	31
HPBA 110-130	53
HPBA 160-200	75

Note generali

Introduzione

I motori variabili ad asse inclinato sono stati progettati in modo da ottenere un elevato angolo di inclinazione dei pompanti rispetto all'asse dell'albero uscente. Rispetto ai motori a piatto inclinato, che raggiungono i 18° di angolo di inclinazione, nelle versioni Bent Axis si riescono a raggiungere i 25°.
Tale geometria offre vari vantaggi:

- elevata coppia di spunto;
- elevato range di variazione della cilindrata;
- elevata efficienza volumetrica e maccanica;
- elevata velocità massima;
- elevate pressioni massime.

I motori Bent Axis Bondioli e Pavesi possono essere impiegati con altri prodotti in sistemi a circuito chiuso e aperto per il trasferimento ed il controllo della potenza idraulica. Possono essere provvisti di valvola di flussaggio (di serie la valvola monta uno strozzatore di Ø1,7). La variazione della cilindrata da massima a minima avviene tramite pilotaggio idraulico ad alta o a bassa pressione, oppure tramite comando elettrico, in funzione delle richieste del cliente.
La versione a comando elettrico ON-OFF, permette una regolazione della cilindrata minima pari al 30% della cilindrata massima.
La versione a comando proporzionale invece, grazie alla geometria utilizzata per la sua progettazione, permette un ampio range di variazione della cilindrata, fino al raggiungimento dei 0° di inclinazione dei pompanti (cilindrata minima nulla).
La funzione estesa della capacità di zero gradi crea opportunità per migliorare facilmente le prestazioni della macchina per:

- assist drive sull'asse sterzante di macchine ad alta inerzia (ad esempio mietitrebbie) e potrebbe includere Anti Slip controllo;
- macchine fuoristrada che richiedono Anti Slip Control (irroratrice semovente);
- applicazioni multimotore che richiedono modalità di lavoro e di trasporto ottimizzate che utilizzano la posizione zero gradi per la massima velocità di trasporto;
- miglioramento della pendenza della macchina.

Ottimizzazione della durata dei cuscinetti nelle applicazioni con forze radiali

La direzione di applicazione del carico radiale influenza la durata dei cuscinetti del motore.
Una direzione ottimale della forza consente quindi di ridurre la sollecitazione sui cuscinetti e di ottenere una durata di vita maggiore degli stessi.
L'angolo di applicazione del carico è consigliato in funzione del senso di rotazione e del tipo di applicazione.
Per il calcolo della durata dei cuscinetti in base all'applicazione, si prega di contattare i nostri uffici tecnici.

Asse puleggia

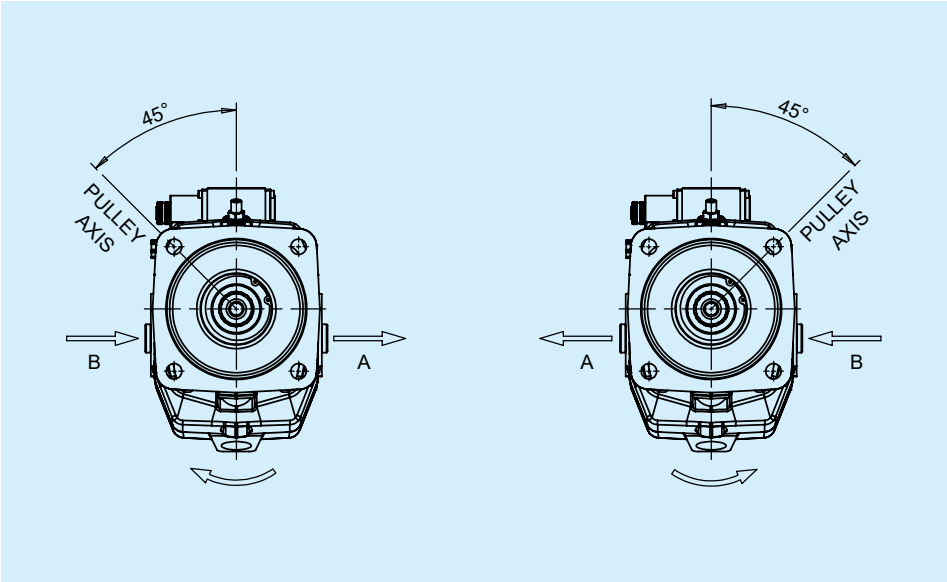

Asse ruota dentata

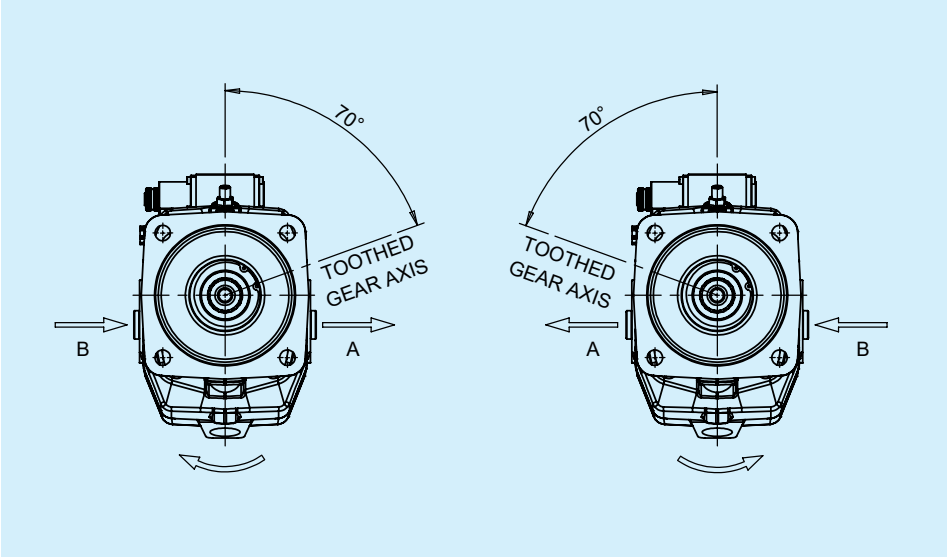

Asse per qualsiasi applicazione (senso di rotazione alternato)

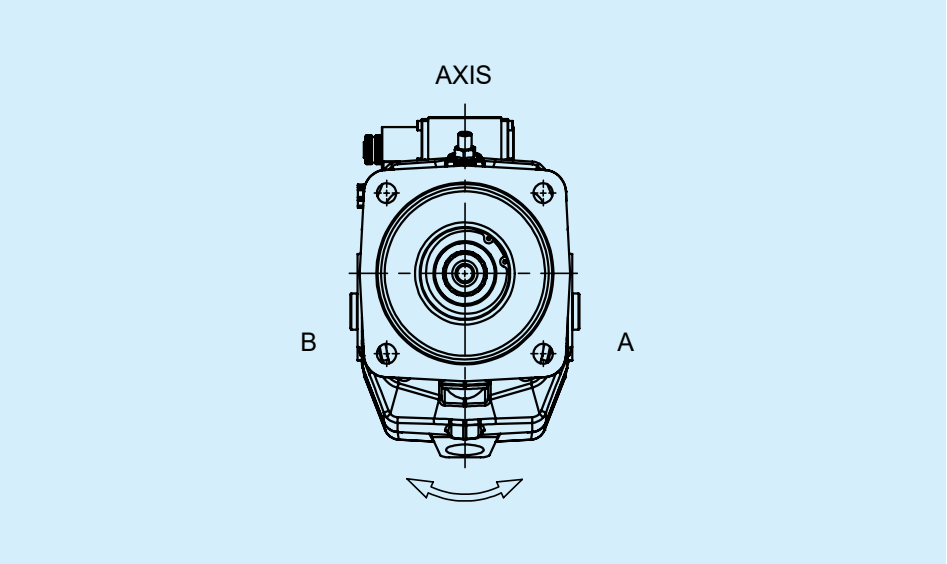

Applicazioni di forze assiali all'albero

Possono essere applicate all'albero forze assiali di compressione (vedi tabella).
È bene evitare invece carichi assiali di trazione che possono ridurre la vita del cuscinetto principale.

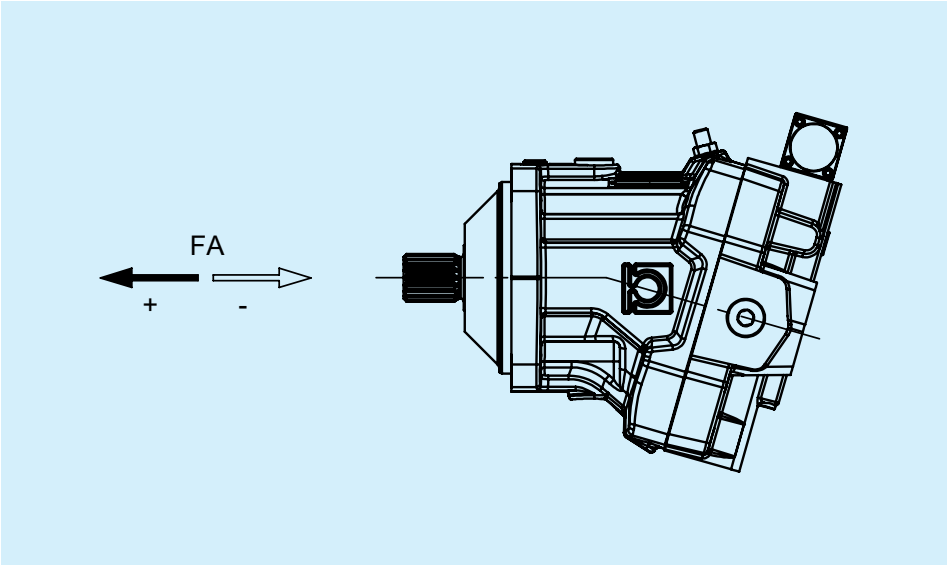

Cilindrata Teorica		Carico assiale MAX senza pressione (*)	Carico assiale MAX a pressione di esercizio
cm3	**in3**	**N**	**N/bar**
60	3,66	1340	118
78	4,76	1340	141
80	4,88	1840	141
108	6,59	1840	184
110	6,71	2000	184
130	7,93	2000	230
160	9,76	3650	230
200	12,2	3650	270

(*) I valori indicati sono quelli massimi e non vanno applicati in funzionamento continuo.

Variable-displacement motors HPBA 060-078

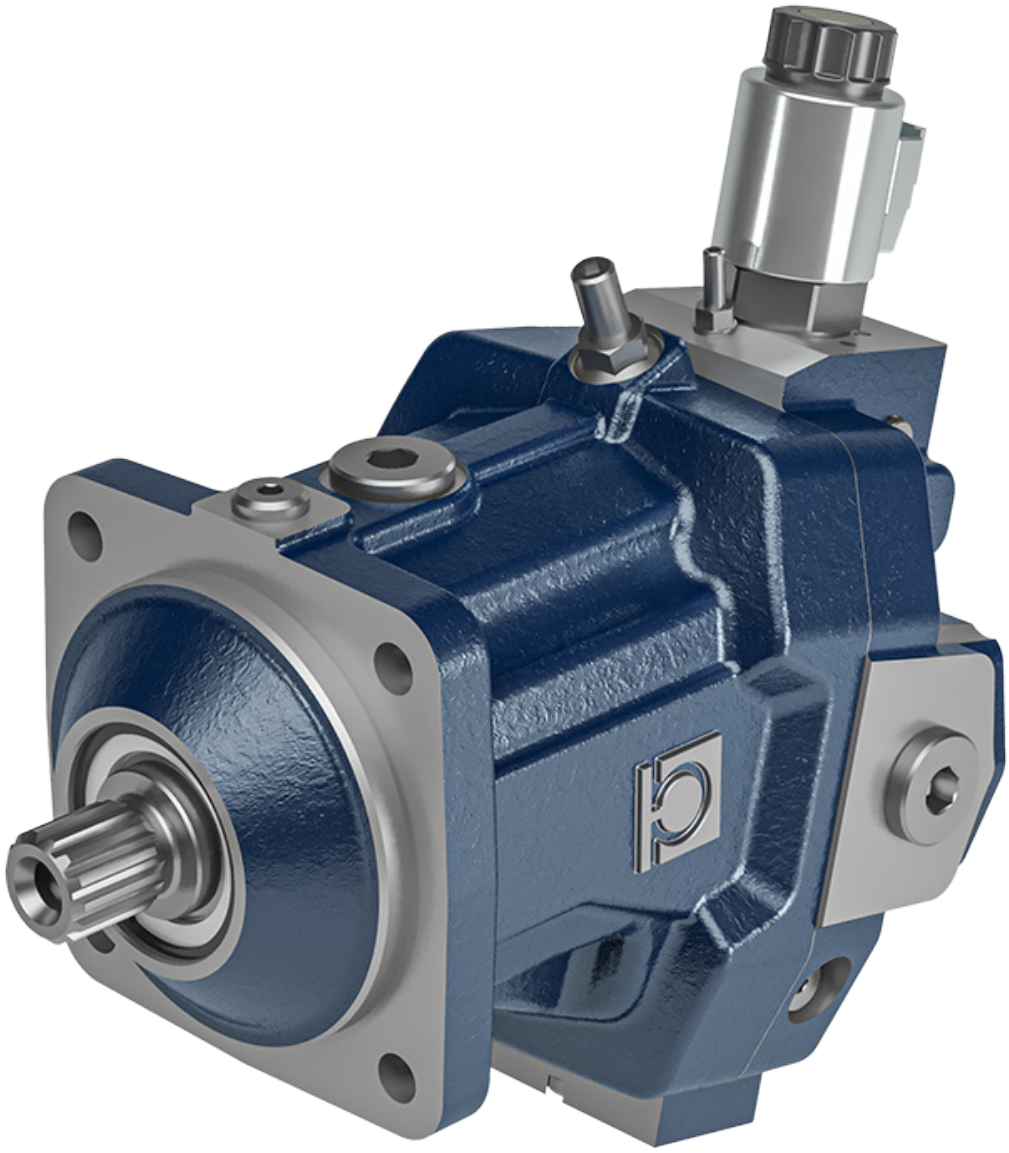

Before use, carefully read the GENERAL INSTRUCTIONS FOR USE OF CLOSED CIRCUIT AXIAL PISTON PUMPS AND MOTORS.

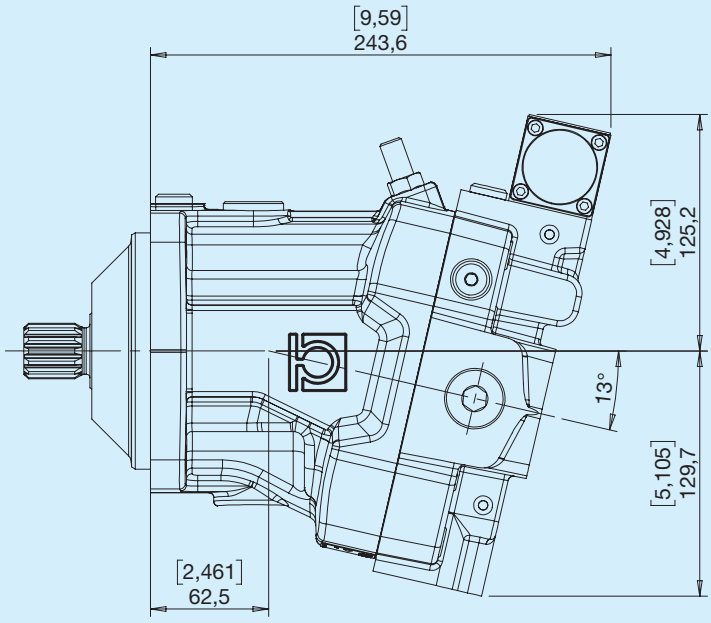

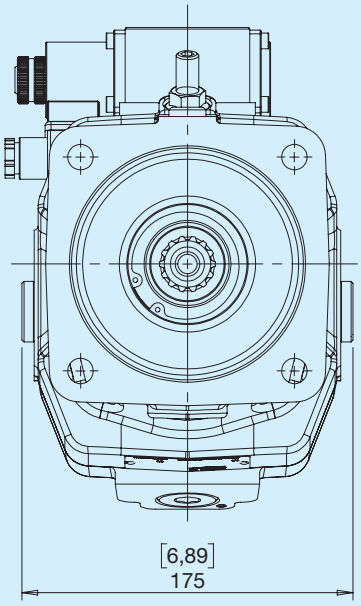

HPBA	Theoretical displacement		Swash plate	Continuous Pressure		Intermittent pressure		Peak pressure		Rotational speed			Weight	
	cm³	**in³**	**°**	**bar**	**psi**	**bar**	**psi**	**bar**	**psi**	**MAX (max V) min⁻¹**	**MAX (min V) min⁻¹**	**MIN min⁻¹**	**kg**	**lbs**
060	60	3.66	25	380	5510	400	5800	450	6525	4400	**5500**	500	28	62
078	78	4.73	26	300	4350	350	5075	400	5800	4400	**5500**	500	28.7	63

I ISO 4 holes standard

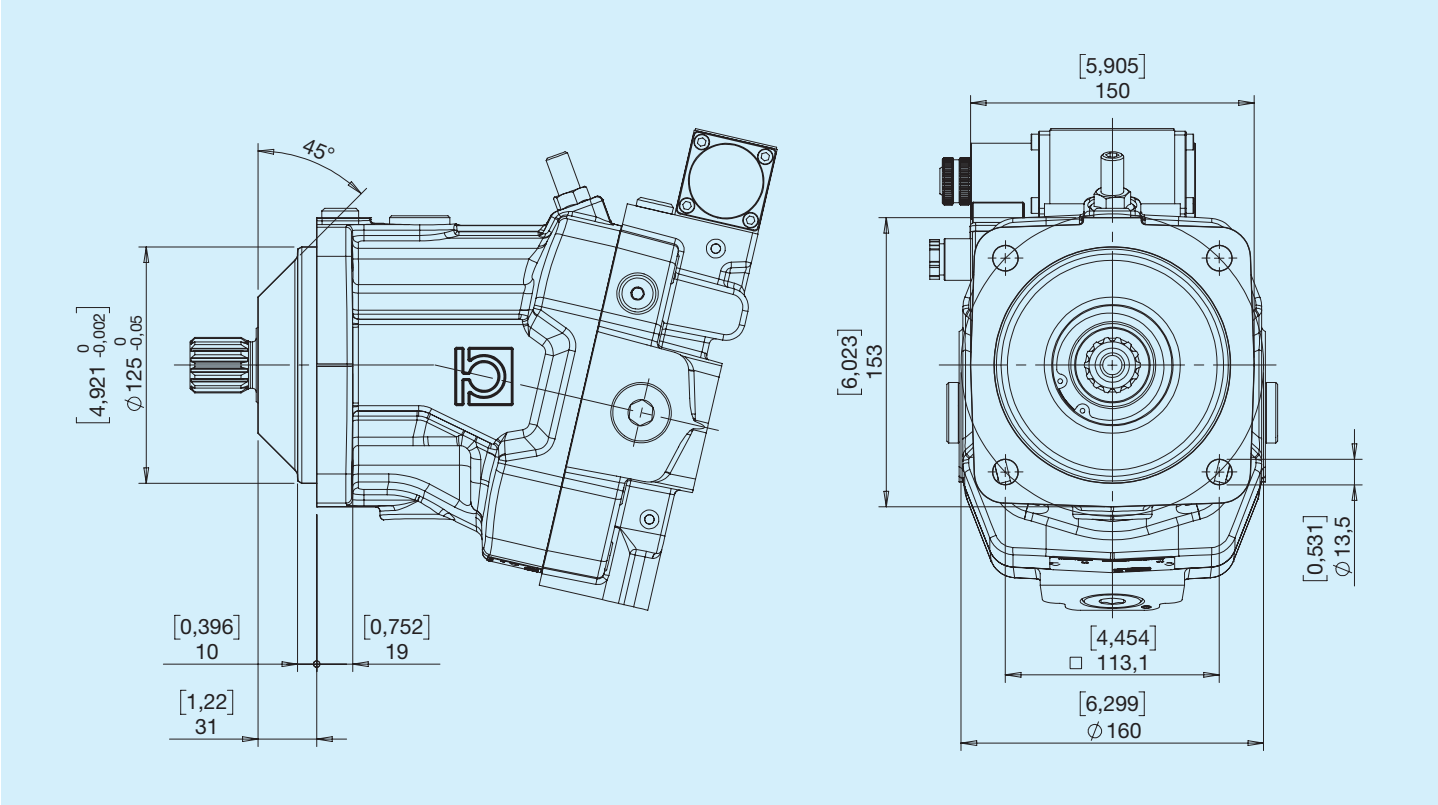

P ISO 2 holes cartridge centring

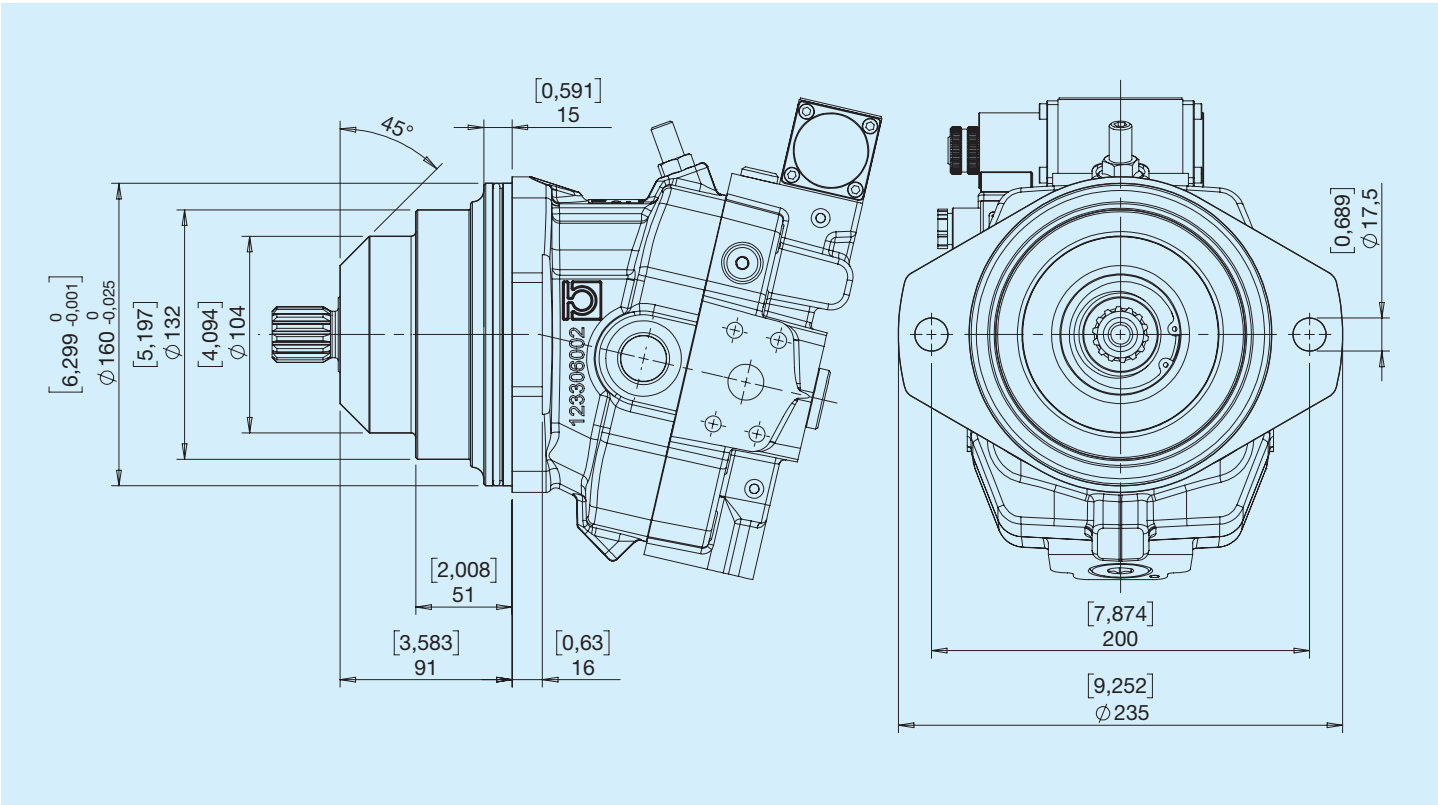

C DIN 5480 W35x2x30x16

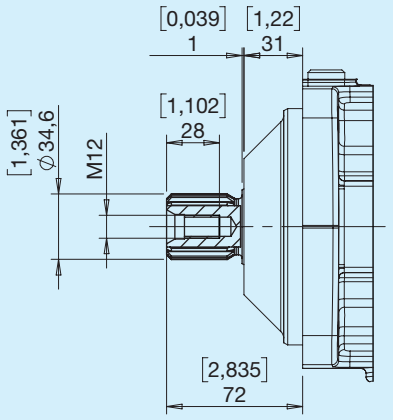

Max. torque 860 Nm

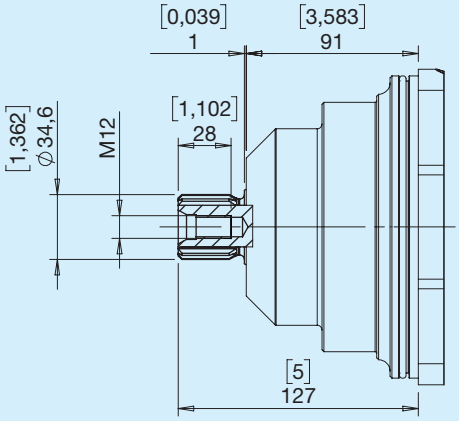

Max. torque 860 Nm

1 DIN 5480 W30x2x30x14

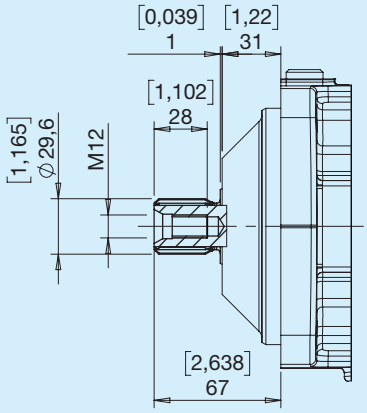

Max. torque 590 Nm

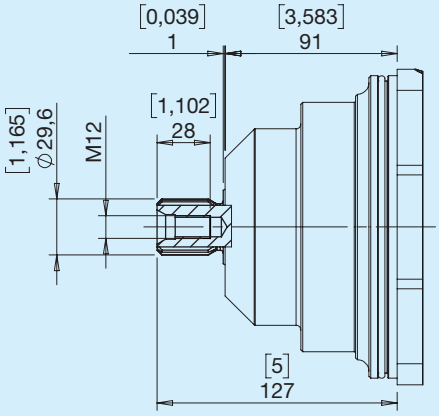

Max. torque 590 Nm

Type G

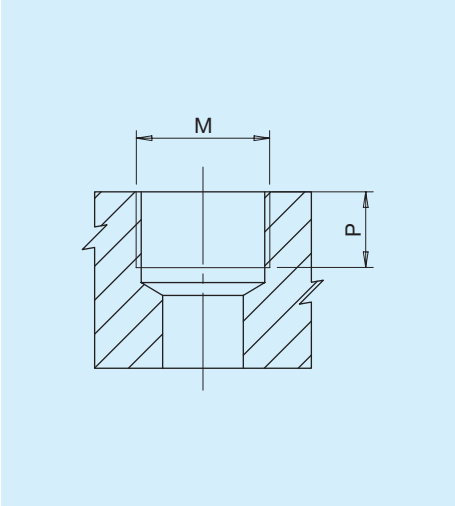

Type	M		P	
		Nm	**mm**	**in**
G2	Port ISO 1179-1 - G 1/4	17	8	0.31
G6	Port ISO 1179-1 - G 3/4	90	19	0.75
G7	Port ISO 1179-1 - G 1	160	19	0.75

Type U

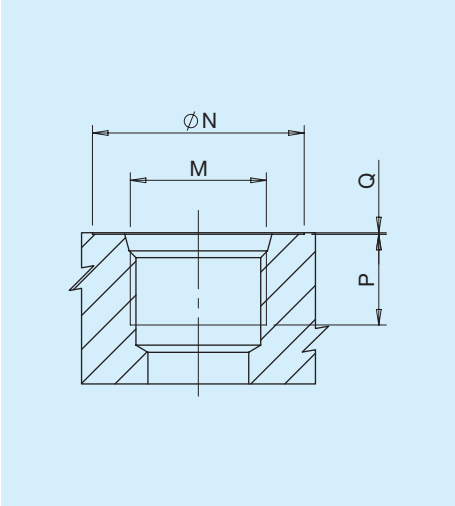

Type	Dim.	N		P		Q		M	
		mm	**in**	**mm**	**in**	**mm**	**in**		**Nm**
U2	1/4'	20	0.79	12	0.47	0.3	0.01	Port ISO 11926-1-7/16-20	17
U6	3/4'	41	1.61	20	0.79	0.3	0.01	Port ISO 11926-1-1 1/16-12	90
U7	1'	49	1.93	18	0.70	0.3	0.01	Port ISO 11926-1-1 5/16-12	160

Type N

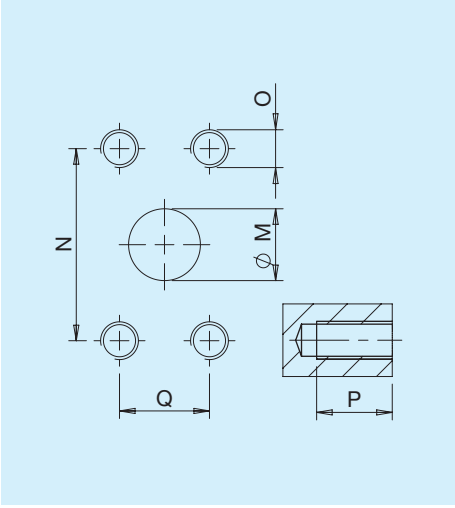

Type	M		N		Q		P		O	
	mm	**in**	**mm**	**in**	**mm**	**in**	**mm**	**in**		**Nm**
N6	19	0.75	50.8	2	23.8	0.94	17	0.67	M10	38

Combinations

Type	Inlet/outlet **A-B**	Drain port **L1-L2**	Pilot **a-b-x**
G	G6	G6	G6
U	U6	U6	U6
N	N6	G6	G2
M	N6	U6	U2

P Rear

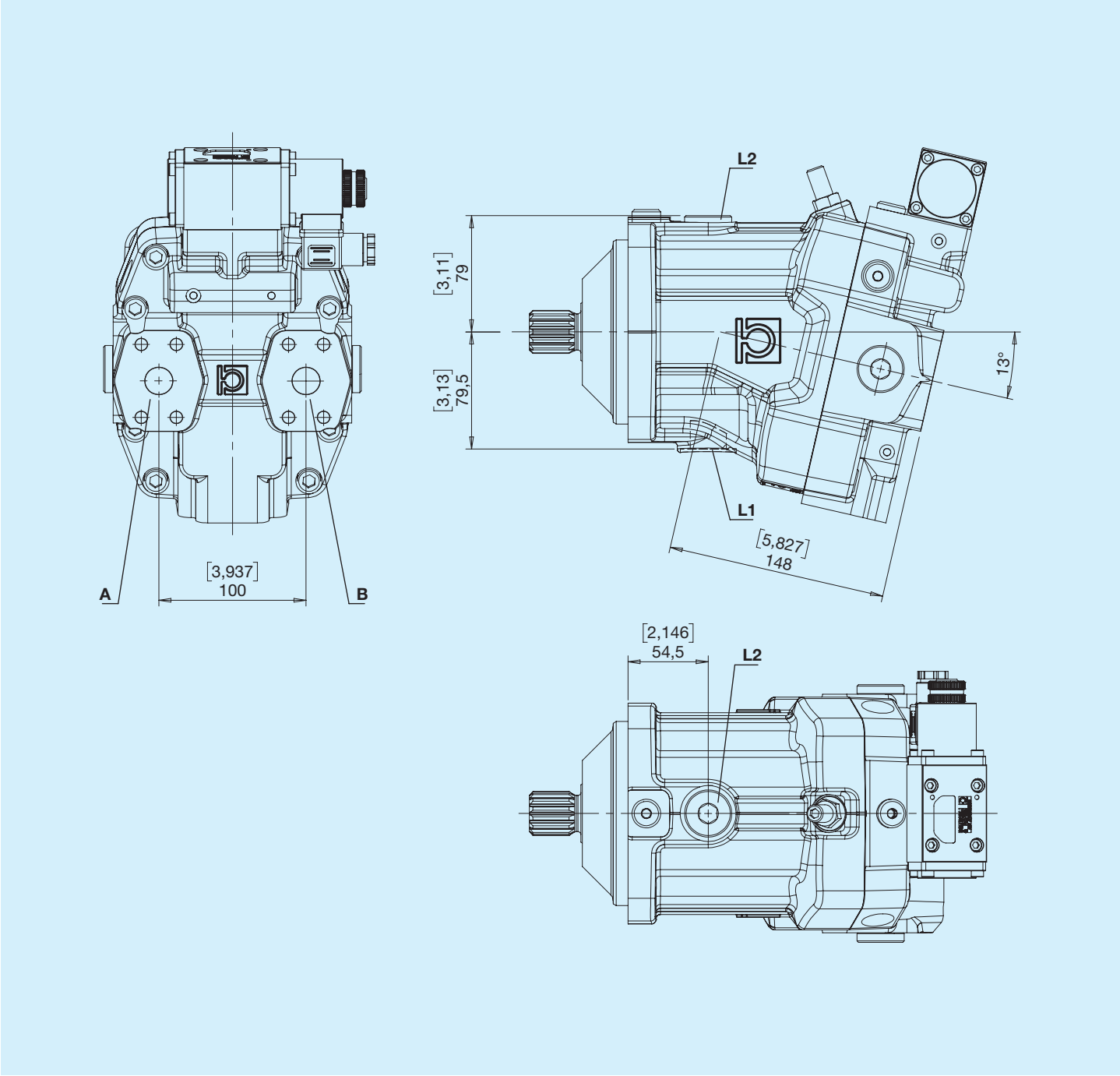

A,B - Use
L1, L2 - Drain port

L Opposite sideways

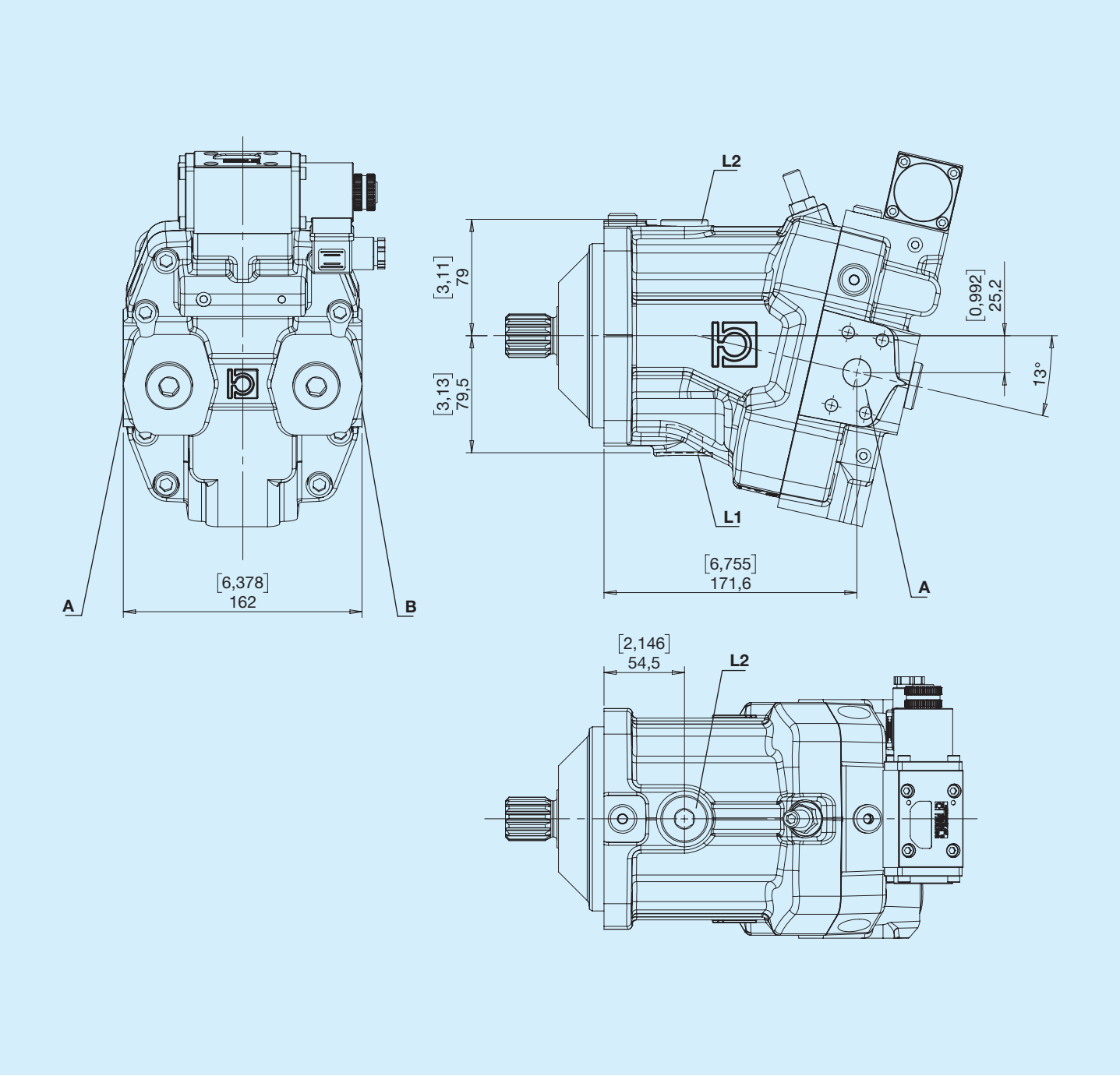

A,B - Use
L1, L2 - Drain port

Y Rear with rotated valve

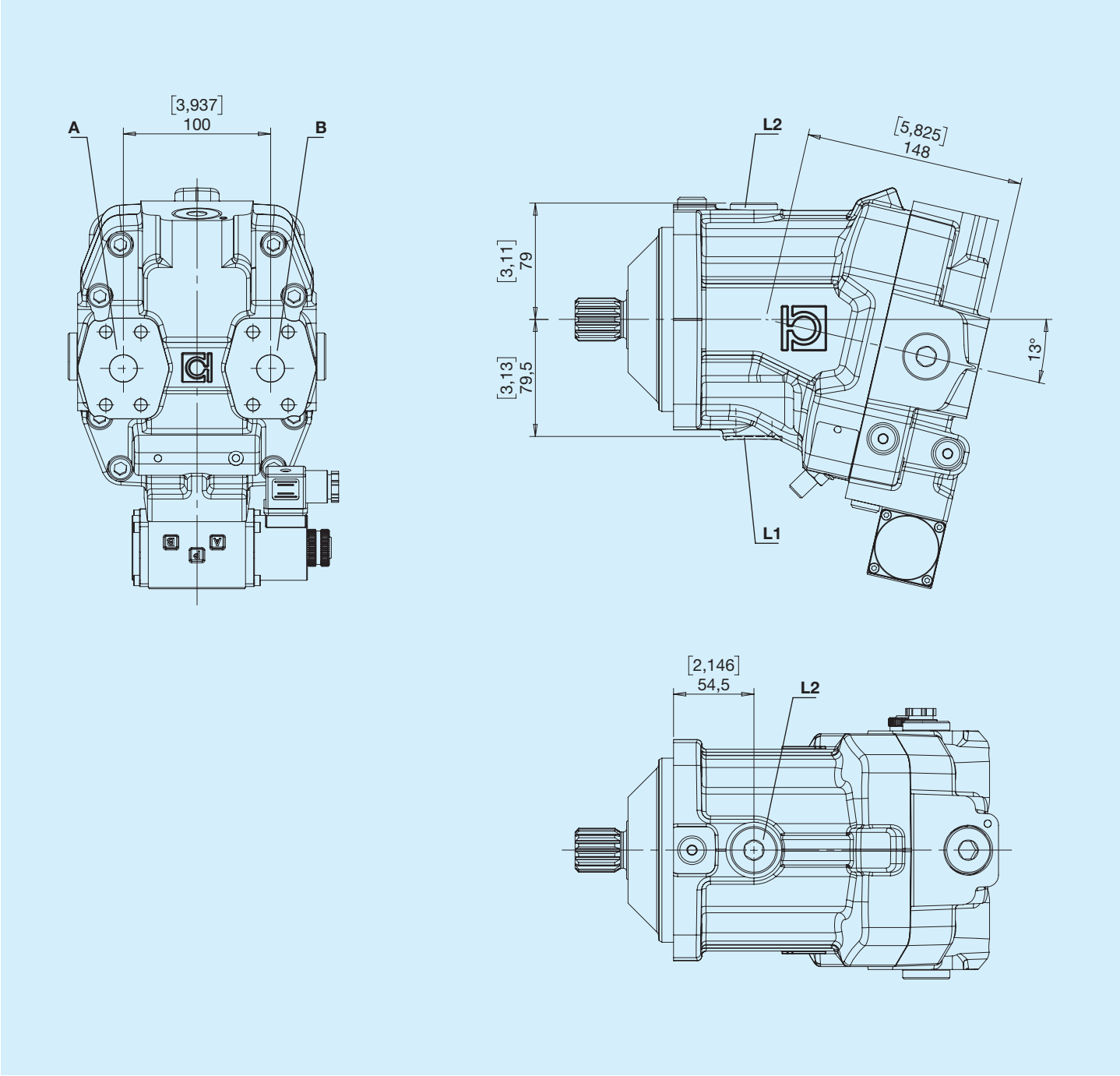

A,B - Use
L1, L2 - Drain port

J Opposite sideways with rotated valve

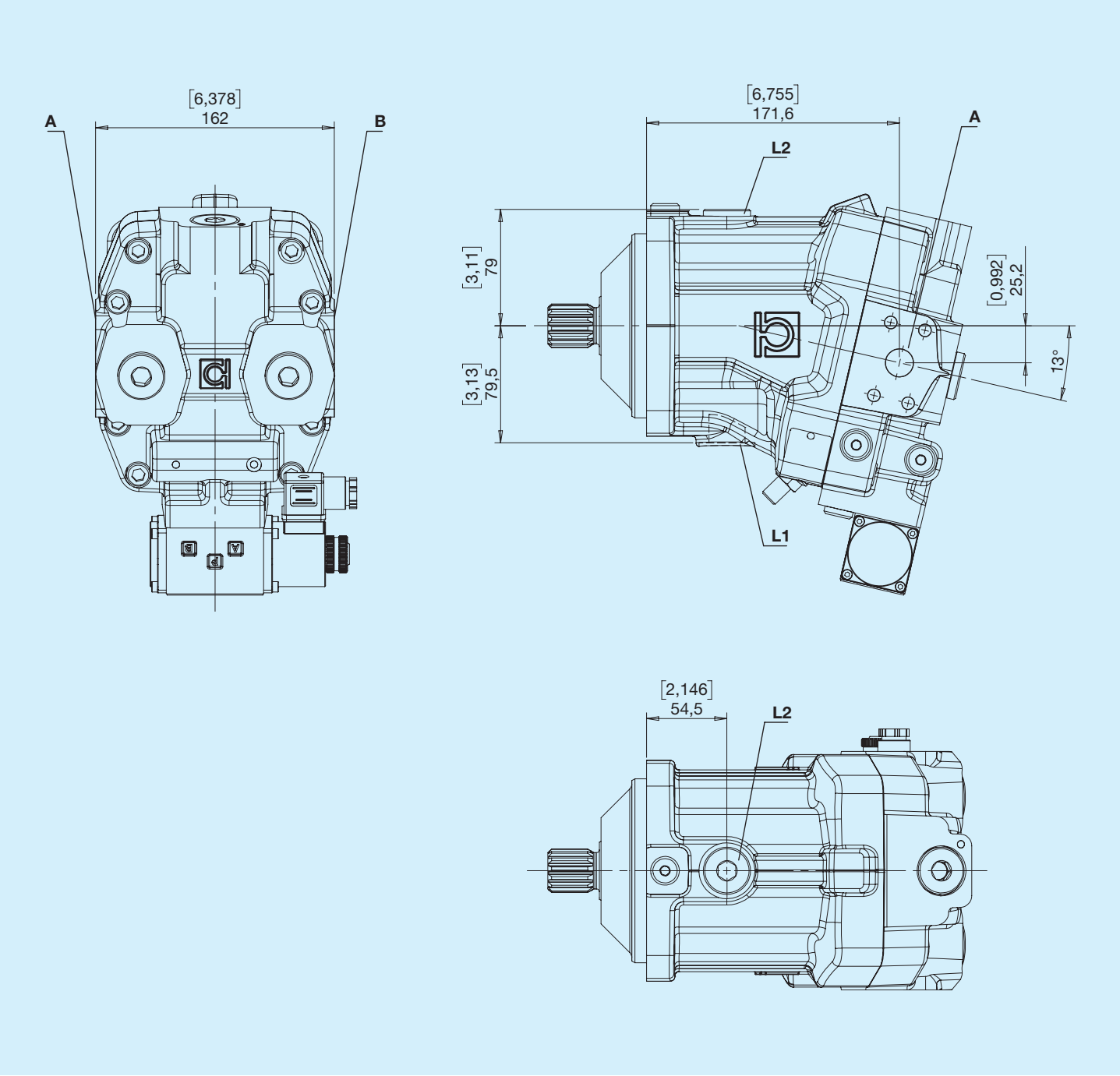

A,B - Use
L1, L2 - Drain port

A Hydraulic automatic, ON/OFF

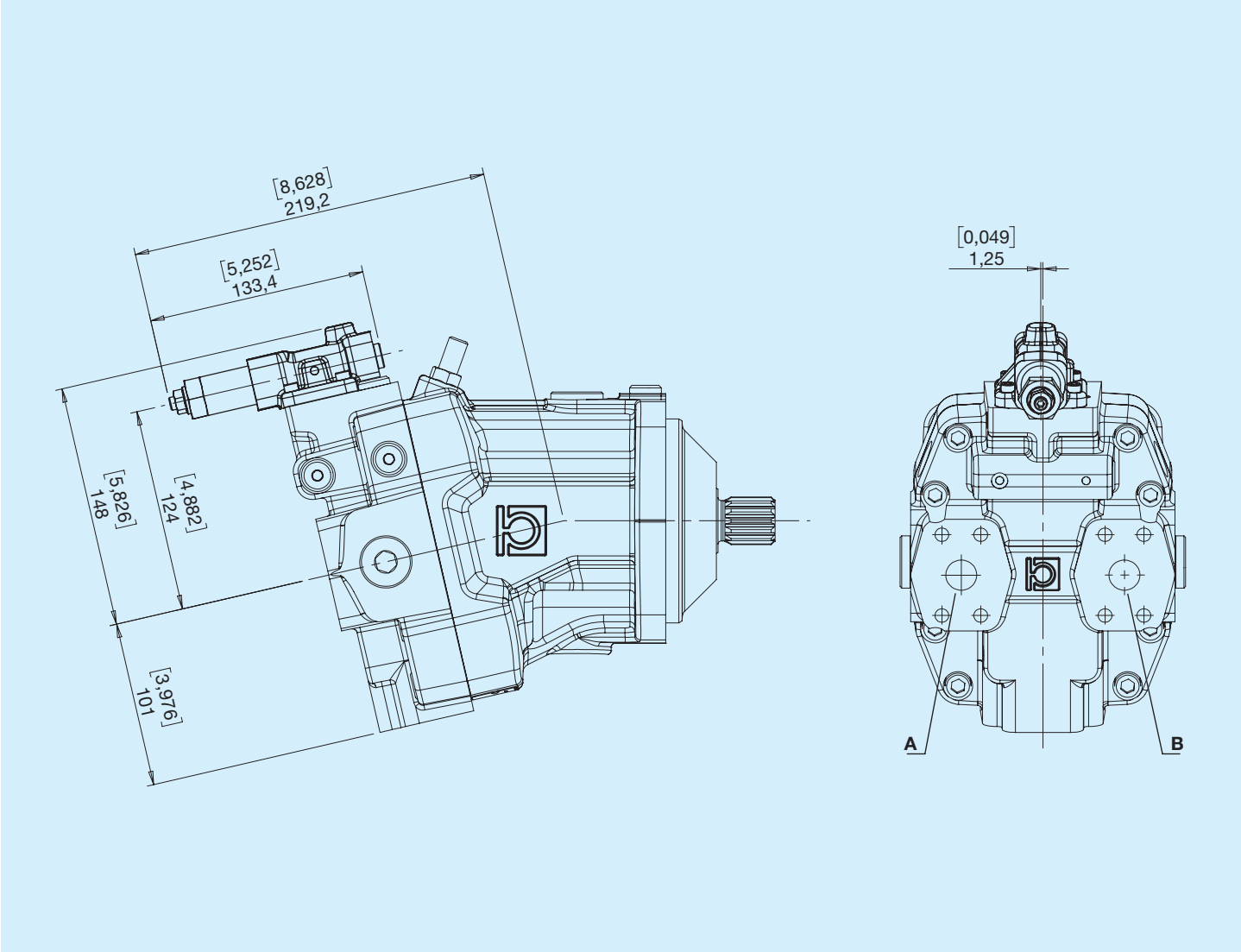

Inlet	Rotation
Right	Left
Right	Right

Pilot

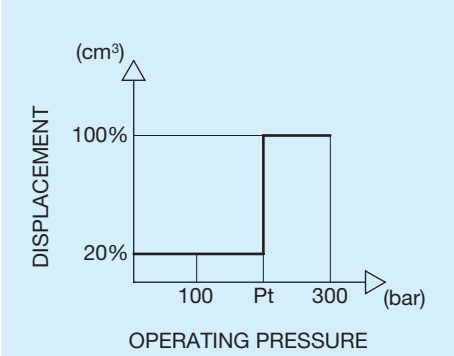

Pt - Calibration pressure (according to customer specifications)

Hydraulic diagram

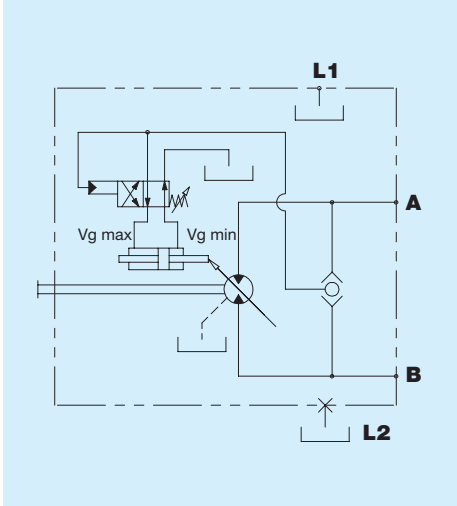

E Electric 2-position 12V

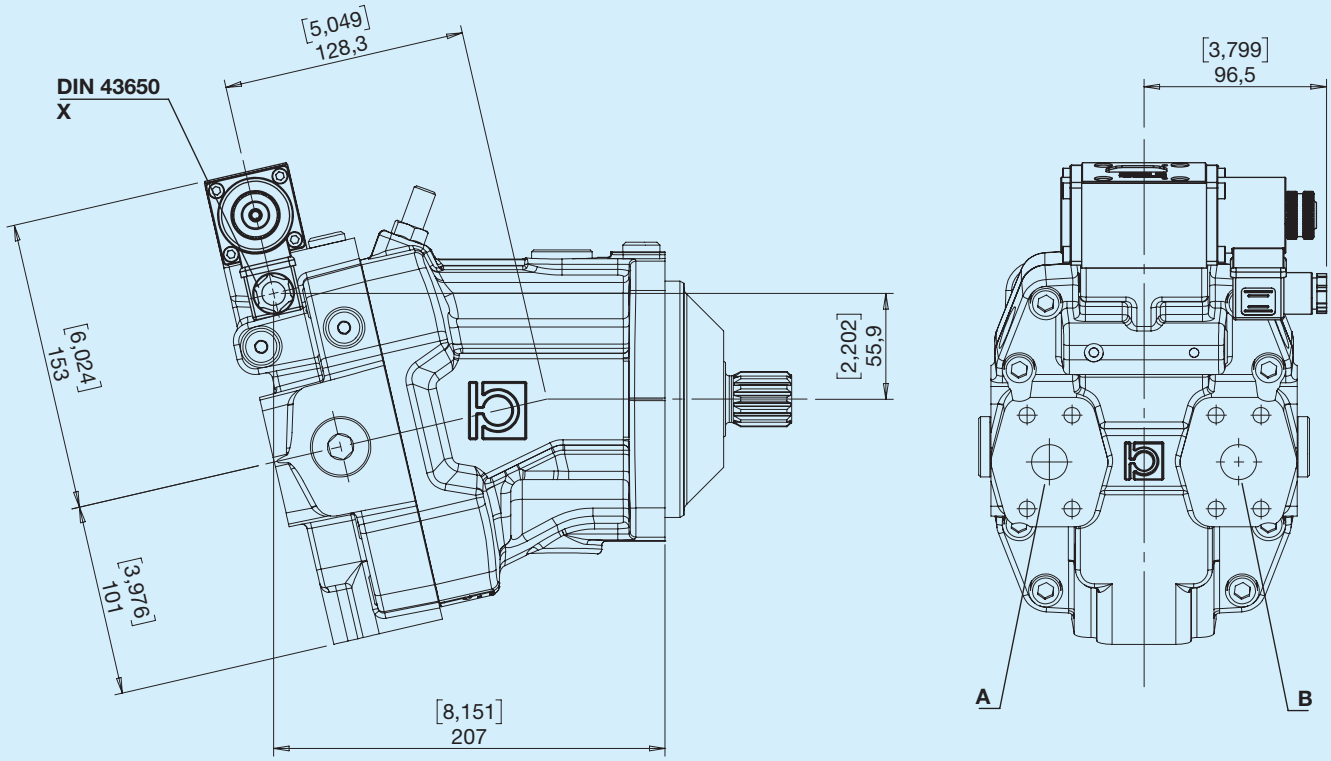

X - Solenoid valve available on request with DEUTSCH DT04-2P connectors

Inlet	Rotation
Right	Left
Right	Right

Hydraulic diagram

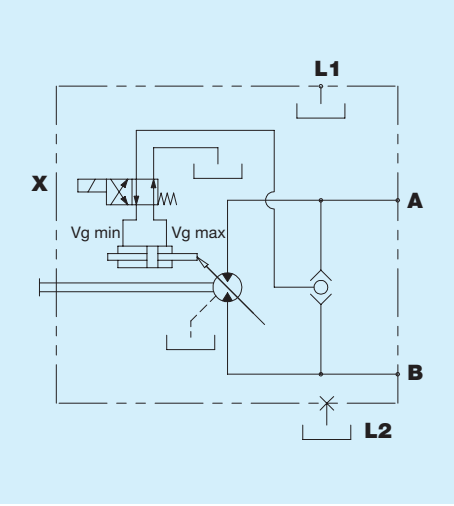

F Electric 2-position 24V

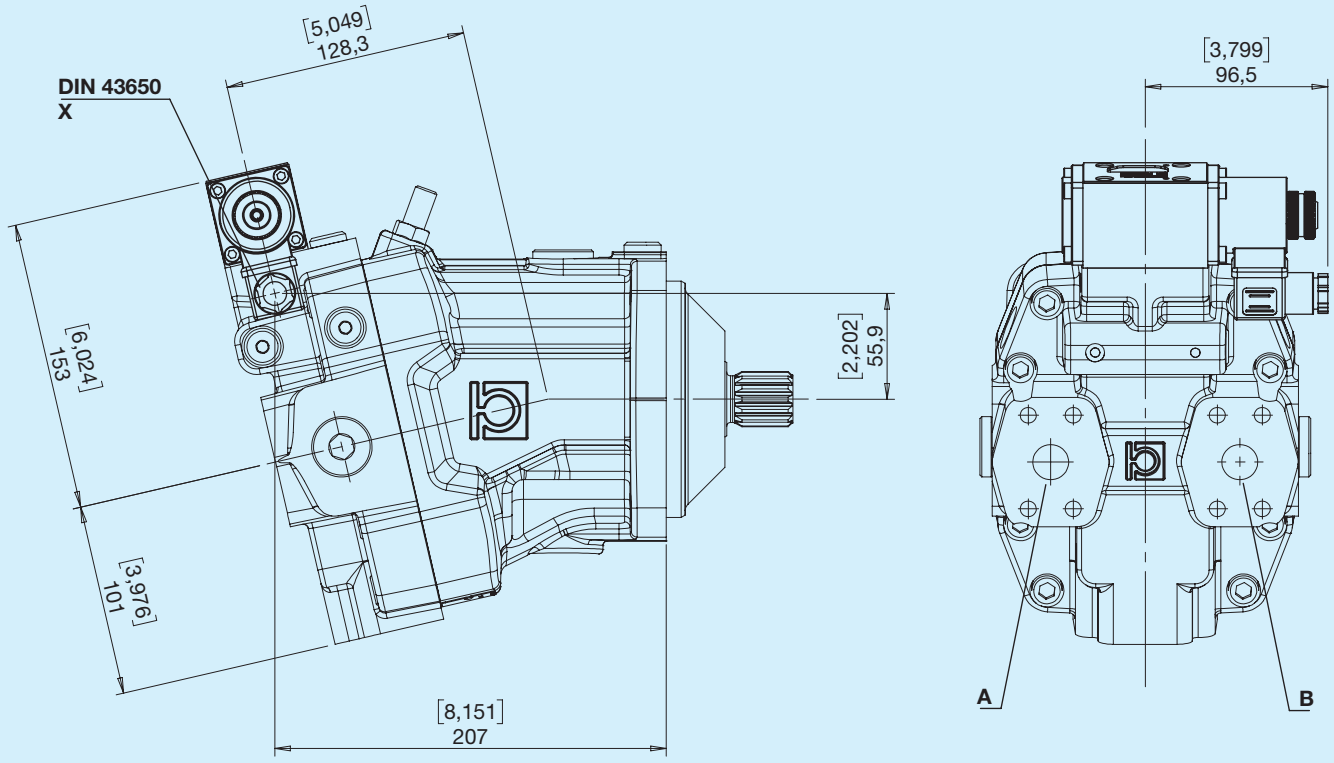

X - Solenoid valve available on request with DEUTSCH DT04-2P connectors

Inlet	Rotation
Right	Left
Right	Right

Hydraulic diagram

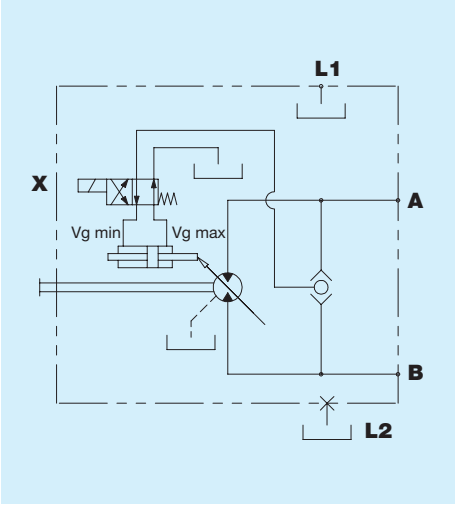

G Proportional hydraulic

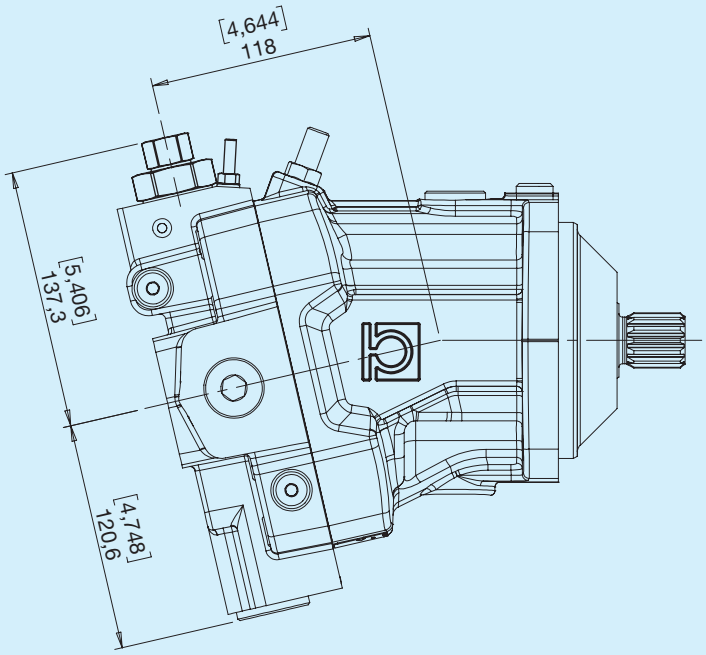

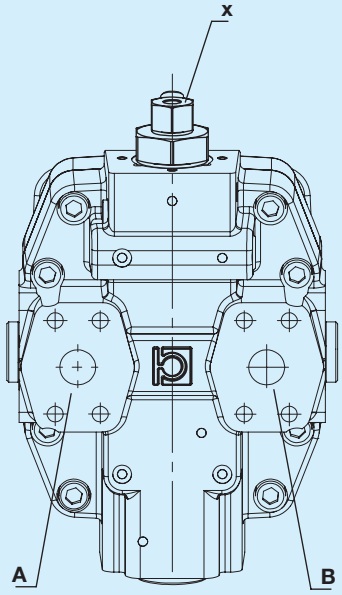

X - Pilot G1/8

Inlet	Rotation
Right	Left
Right	Right

Pilot

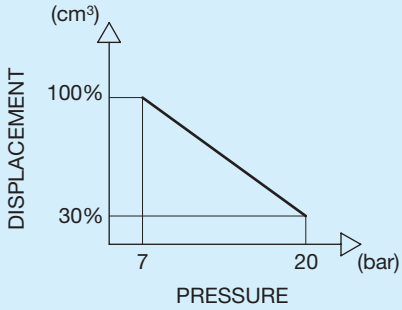

Hydraulic diagram

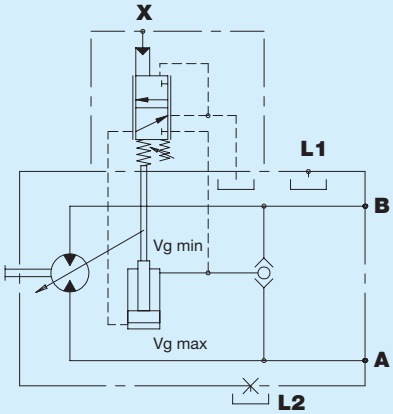

H Direct hydraulic, 2-position

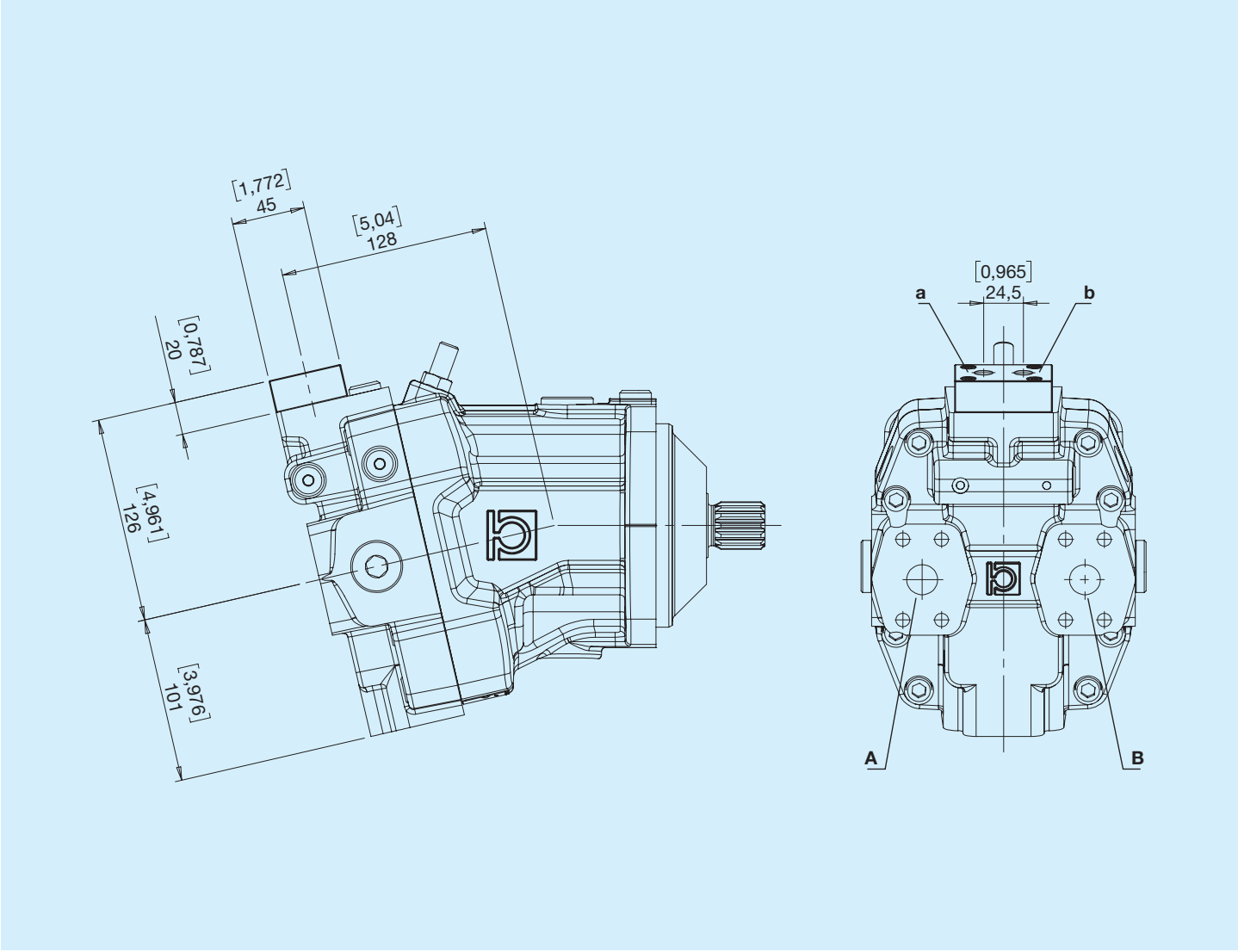

Inlet	Rotation
Right	Left
Right	Right

Pilot

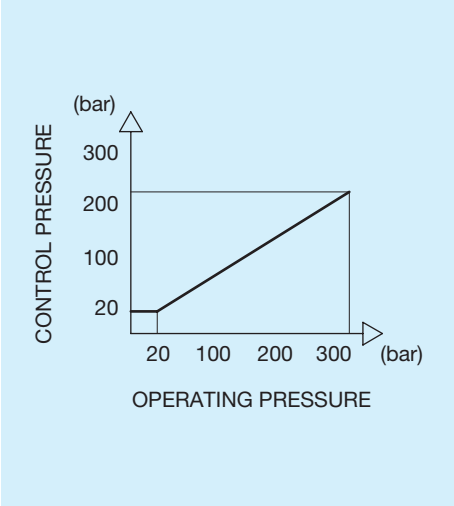

Hydraulic diagram

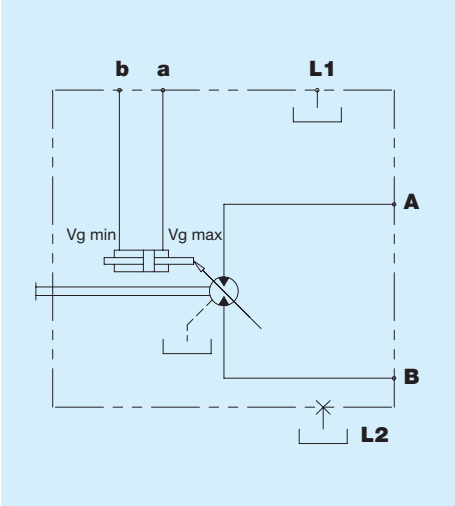

K Hydraulic, 2-position, low pressure

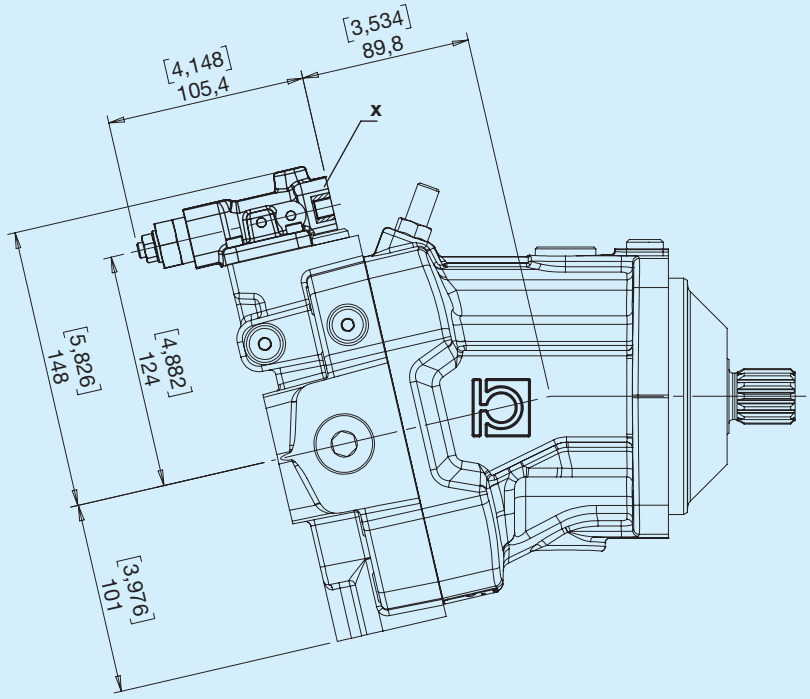

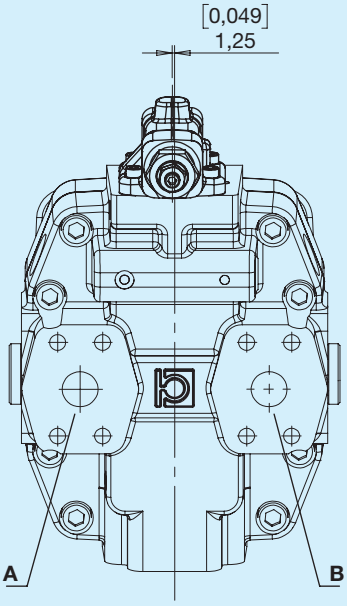

X - Pilot G1/8

Inlet	Rotation
Right	Left
Right	Right

Diagram

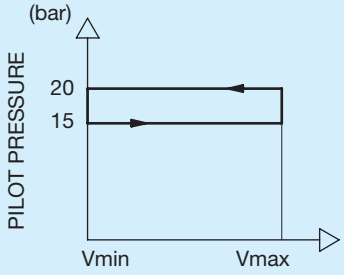

The motor is normally at maximum displacement. By applying external pressure to the pilot valve, the motor switches to minimum displacement. For correct displacement variation, observe the pilot pressure values shown in the diagram.

Hydraulic diagram

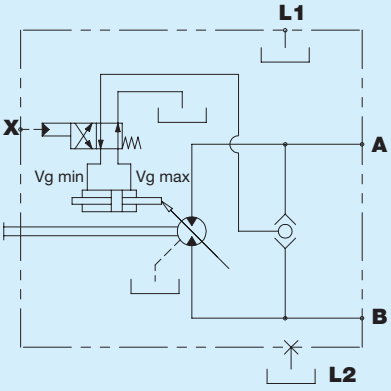

O Electronic proportional feedback control 12V

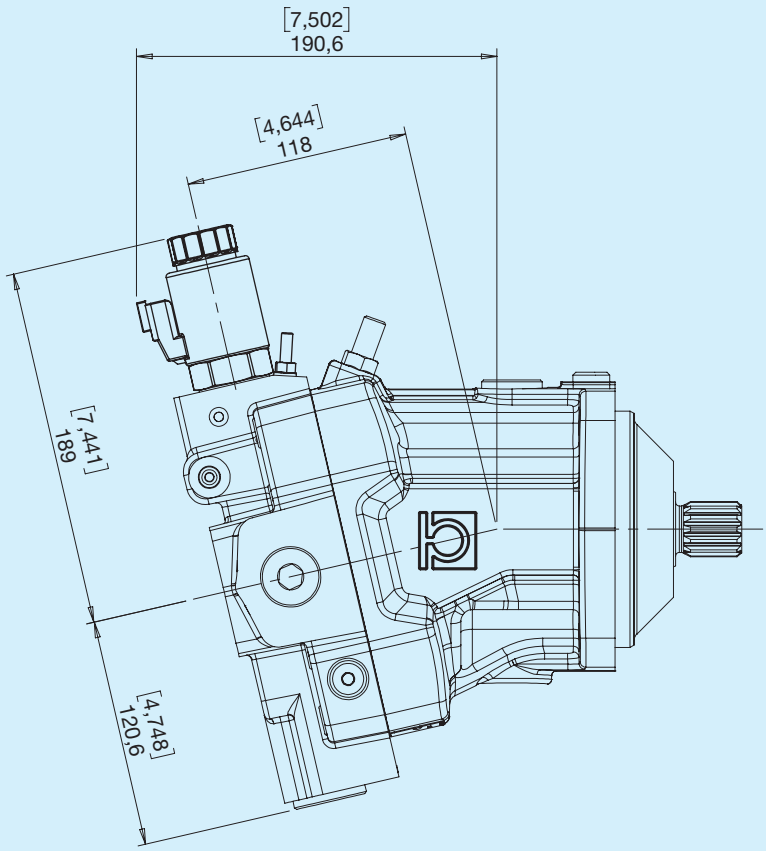

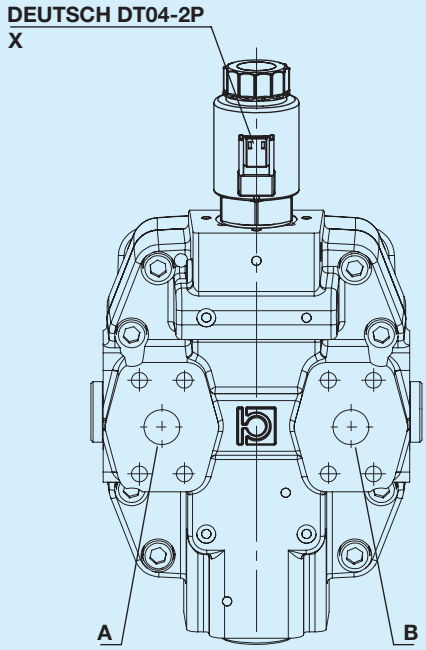

X - Solenoid valve

Inlet	Rotation
Right	Left
Right	Right

Pilot

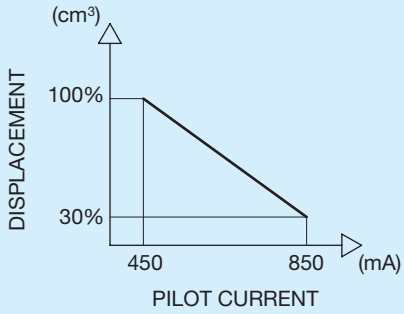

Hydraulic diagram

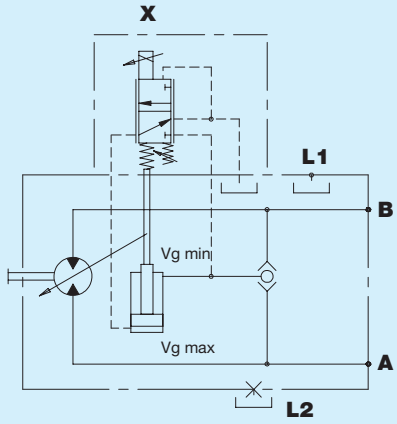

V Electronic proportional feedback control 24V

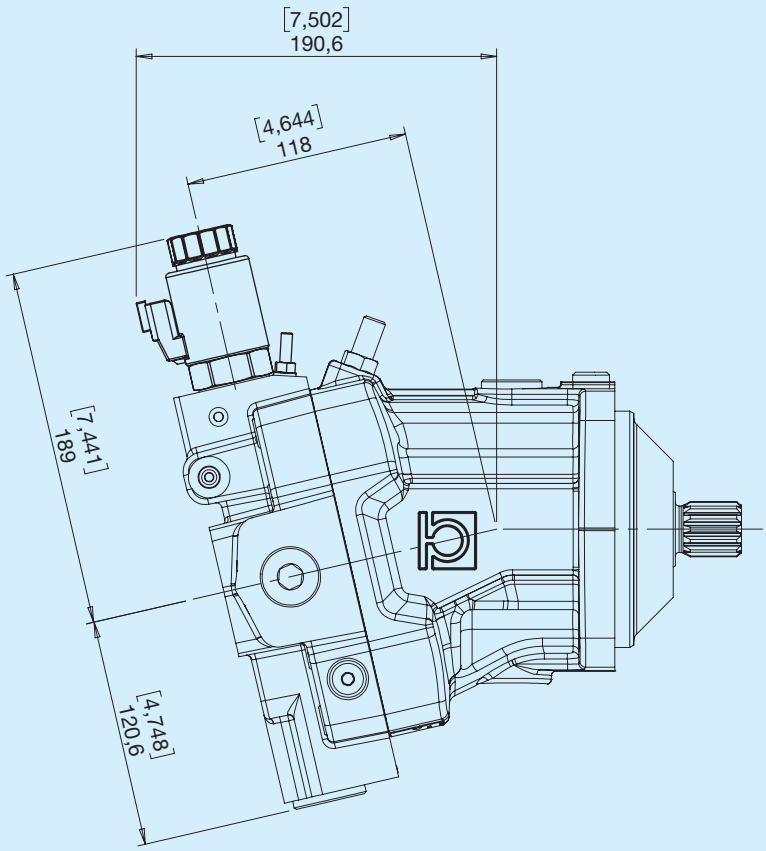

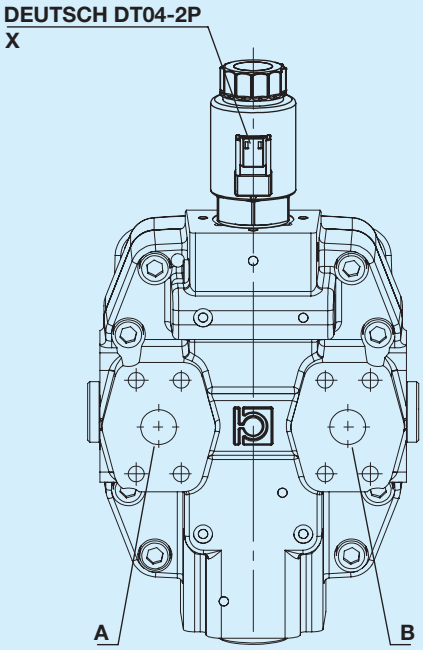

X - Solenoid valve

Inlet	Rotation
Right	Left
Right	Right

Pilot

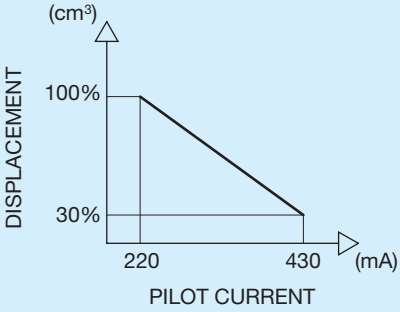

Hydraulic diagram

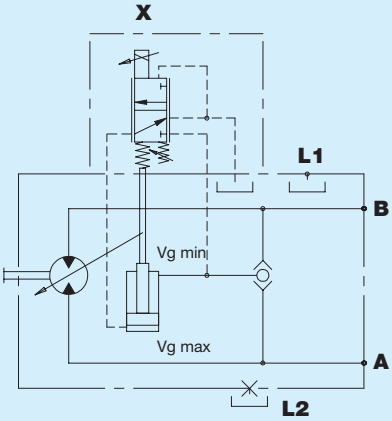

R Electric ON/OFF with pressure override and channel selector

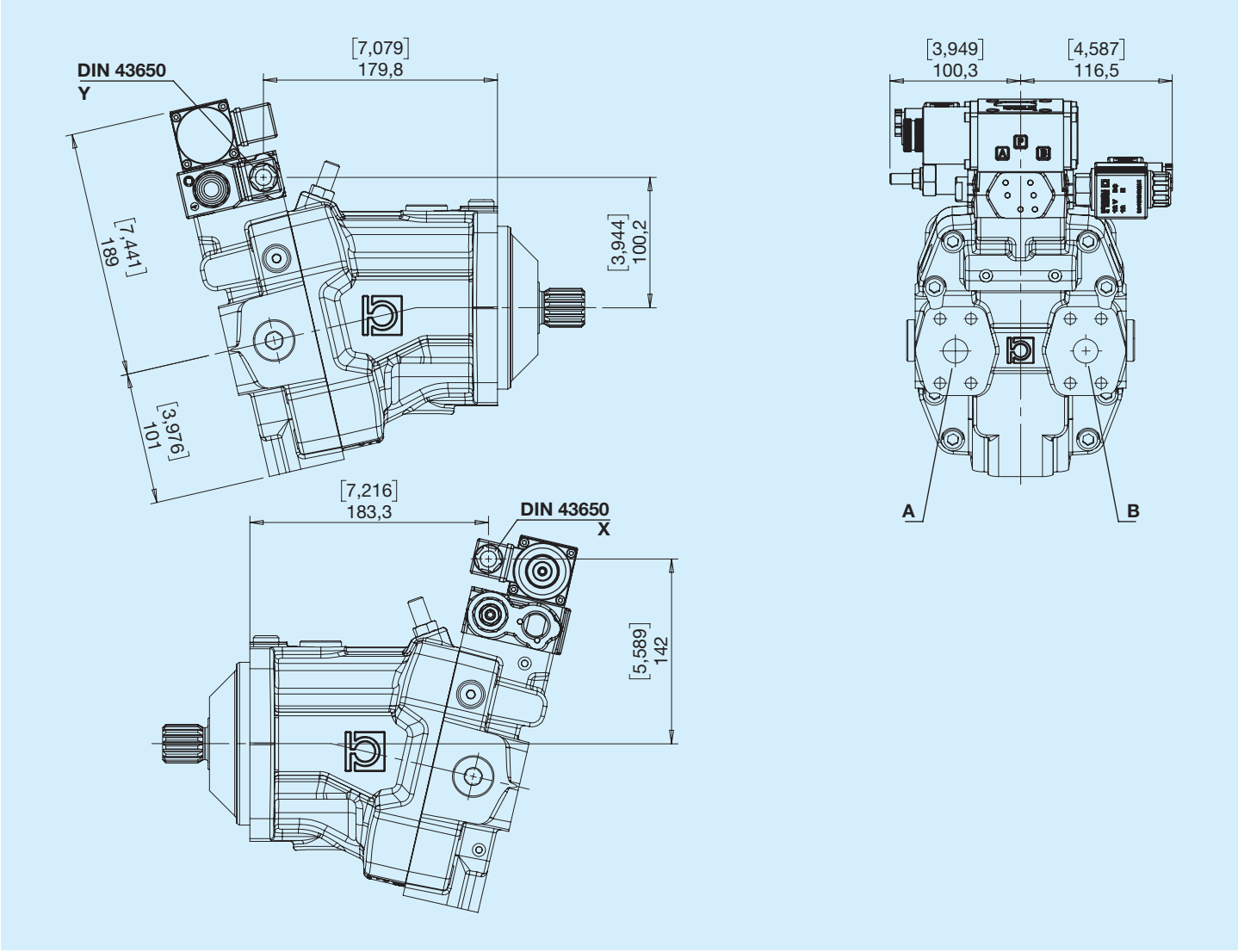

Inlet	Rotation
Right	Left
Right	Right

Hydraulic diagram

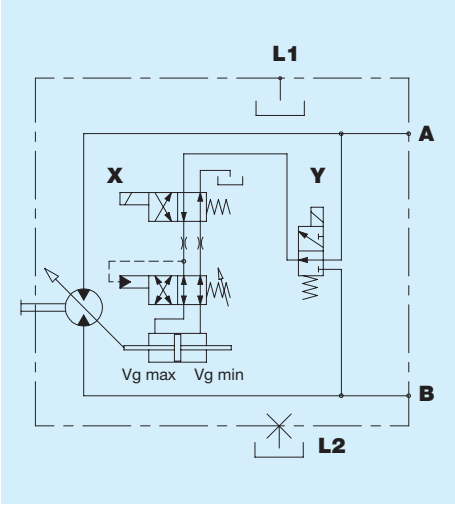

U Electric ON/OFF with pressure override

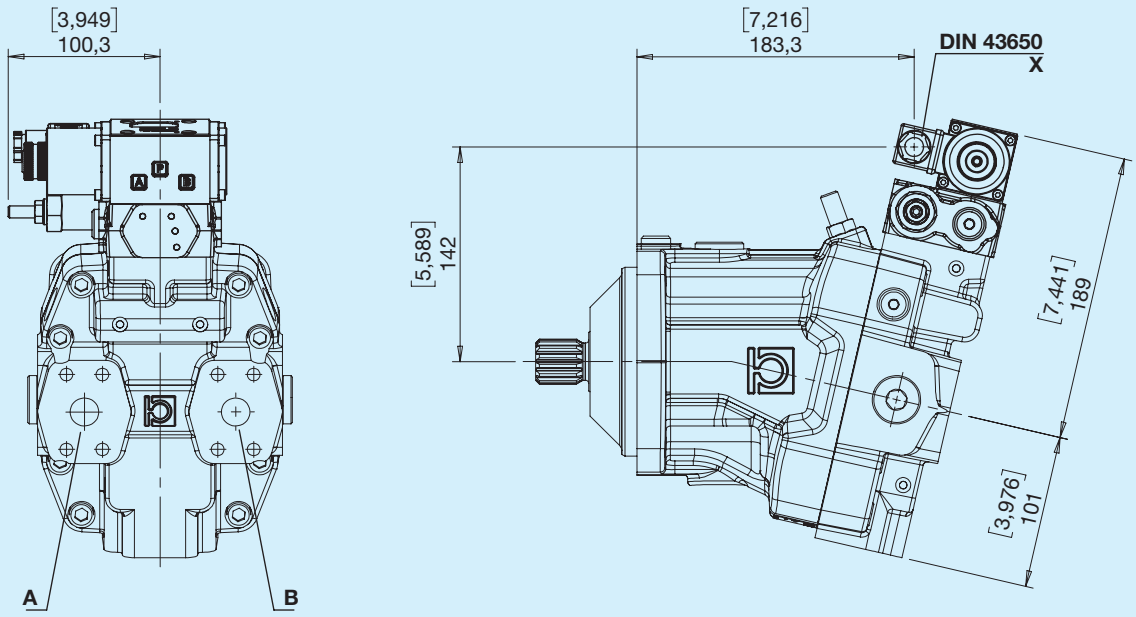

Inlet	Rotation
Right	Left
Right	Right

Hydraulic diagram

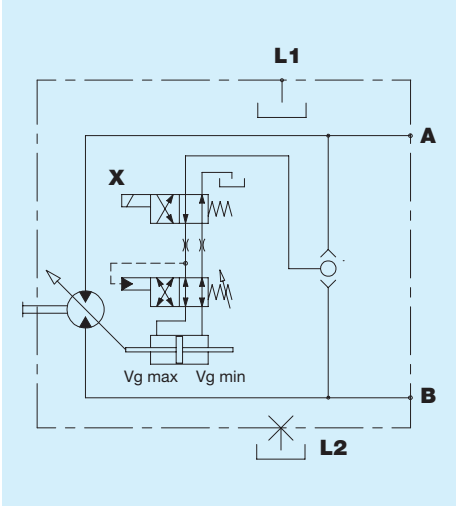

V Flushing valve (5-7 l/min)

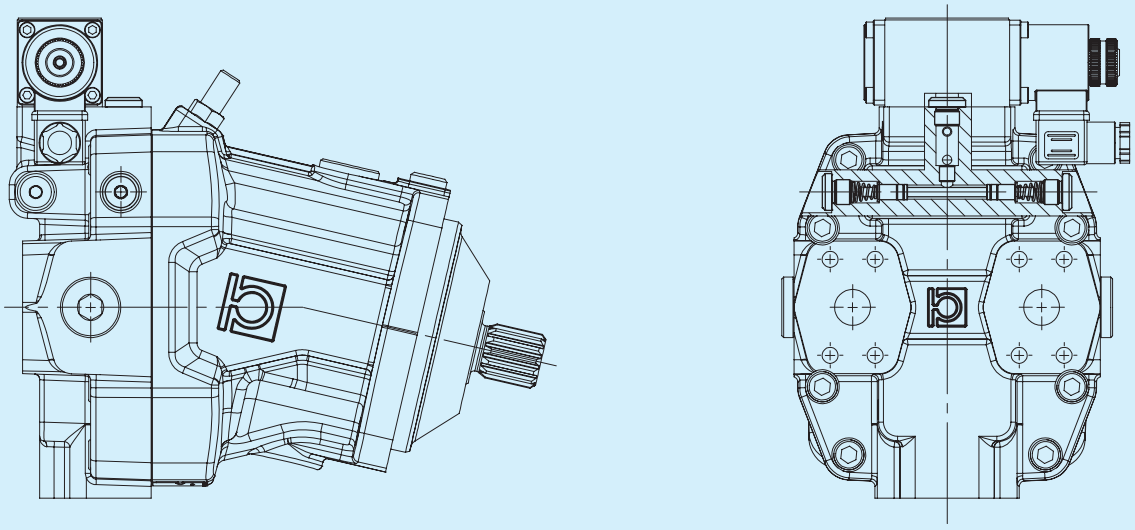

Hydraulic diagram

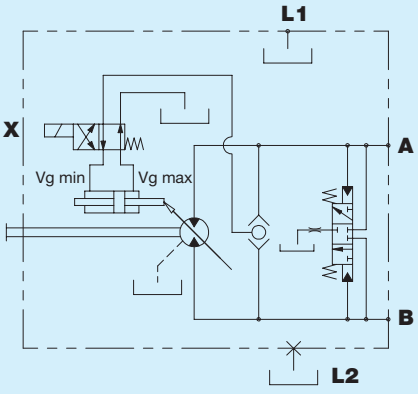

HPBA 060-078	1 2 3	4 5	6	7	8	9	10	11	12 13 14

1 2 3

Standard displacement

060	**078**

4 5

Minimum displacement

...

6

Flanges

I	ISO 4 holes standard	**P**	ISO 2 holes cartridge centring

7

Shafts

C	DIN 5480 W35x2x30x16	**1**	DIN 5480 W30x2x30x14

8

Type of ports

G	Gas	**U**	UNF	**N**	Gas-SAE inlet/outlet	**M**	UNF-SAE inlet/outlet

9

Position of ports

P	Rear	**L**	Opposite sideways	**Y**	Rear with rotated valve (not available for O - V - G controls)	**J**	Opposite sideways with rotated valve (not available for O - V - G controls)

10

Controls

A	Hydraulic automatic, ON/OFF	**G**	Proportional hydraulic	**O**	Electronic proportional feedback control 12V	**U**	Electric ON/OFF with pressure override
E	Electric 2-position 12V	**H**	Direct hydraulic, 2-position	**V**	Electronic proportional feedback control 24V		
F	Electric 2-position 24V	**K**	Hydraulic, 2-position, low pressure	**R**	Electric ON/OFF with pressure override and channel selector		

11

Accessories

0	No option	**V**	Flushing valve	**V**	Flushing valve

12 13 14

Special versions

...

BONDIOLI & PAVESI HP Hydraulic

Variable-displacement motors HPBA 080-108

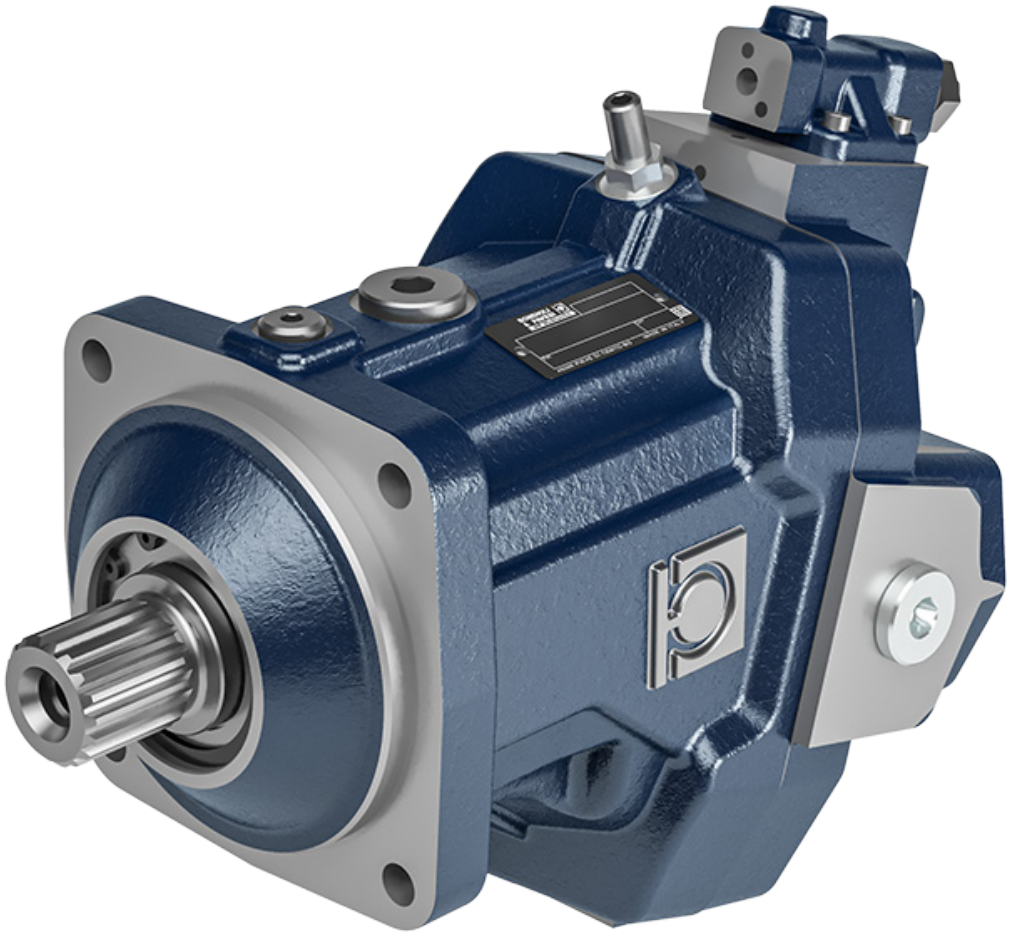

Before use, carefully read the GENERAL INSTRUCTIONS FOR USE OF CLOSED CIRCUIT AXIAL PISTON PUMPS AND MOTORS.

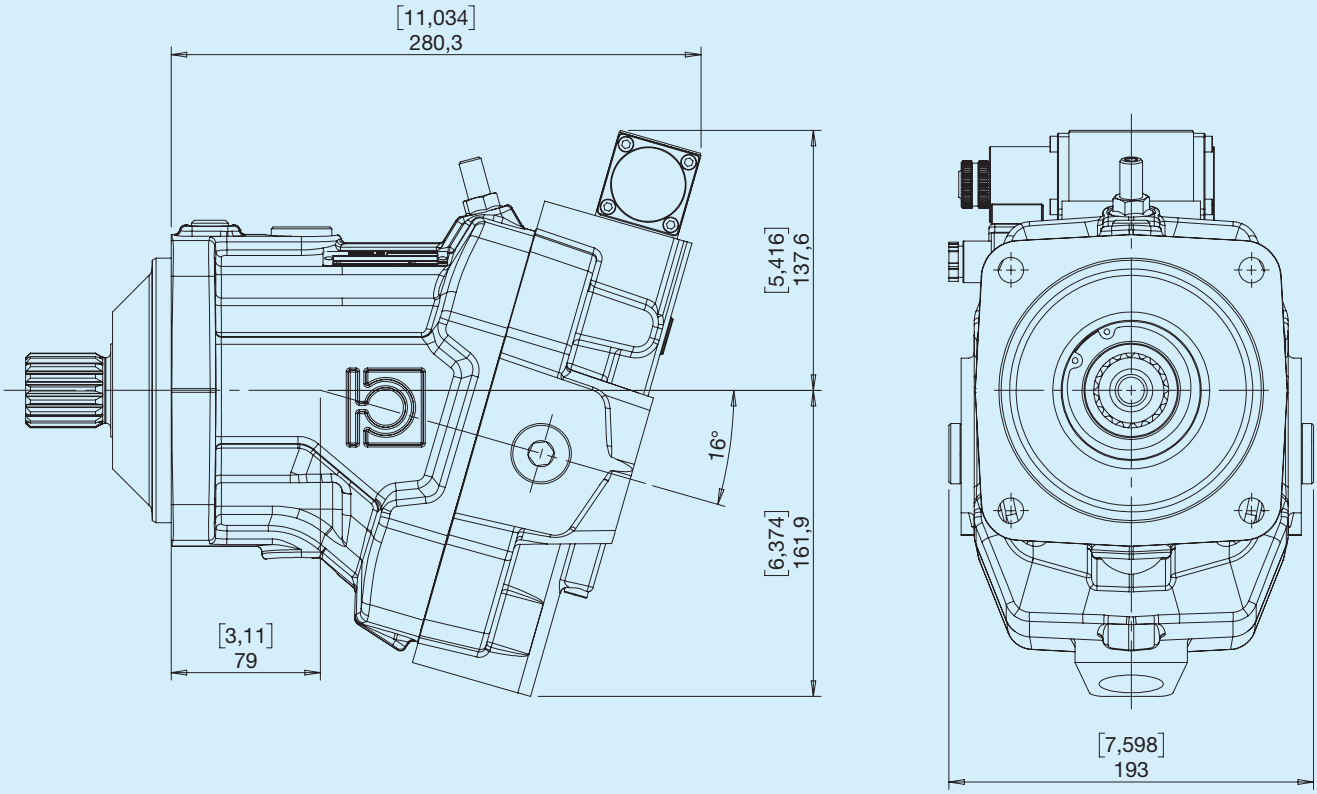

HPBA	Theoretical displacement		Swash plate	Continuous Pressure		Intermittent pressure		Peak pressure		Rotational speed			Weight	
	cm³	**in³**	**°**	**bar**	**psi**	**bar**	**psi**	**bar**	**psi**	**MAX (max V) min⁻¹**	**MAX (min V) min⁻¹**	**MIN min⁻¹**	**kg**	**lbs**
040	80	4.88	25	350	5075	400	5800	450	6525	3200	**5000**	500	38	84
108	108	6.59	25	350	5075	400	5800	450	6525	3200	**5000**	500	38	84

I ISO 4 holes standard

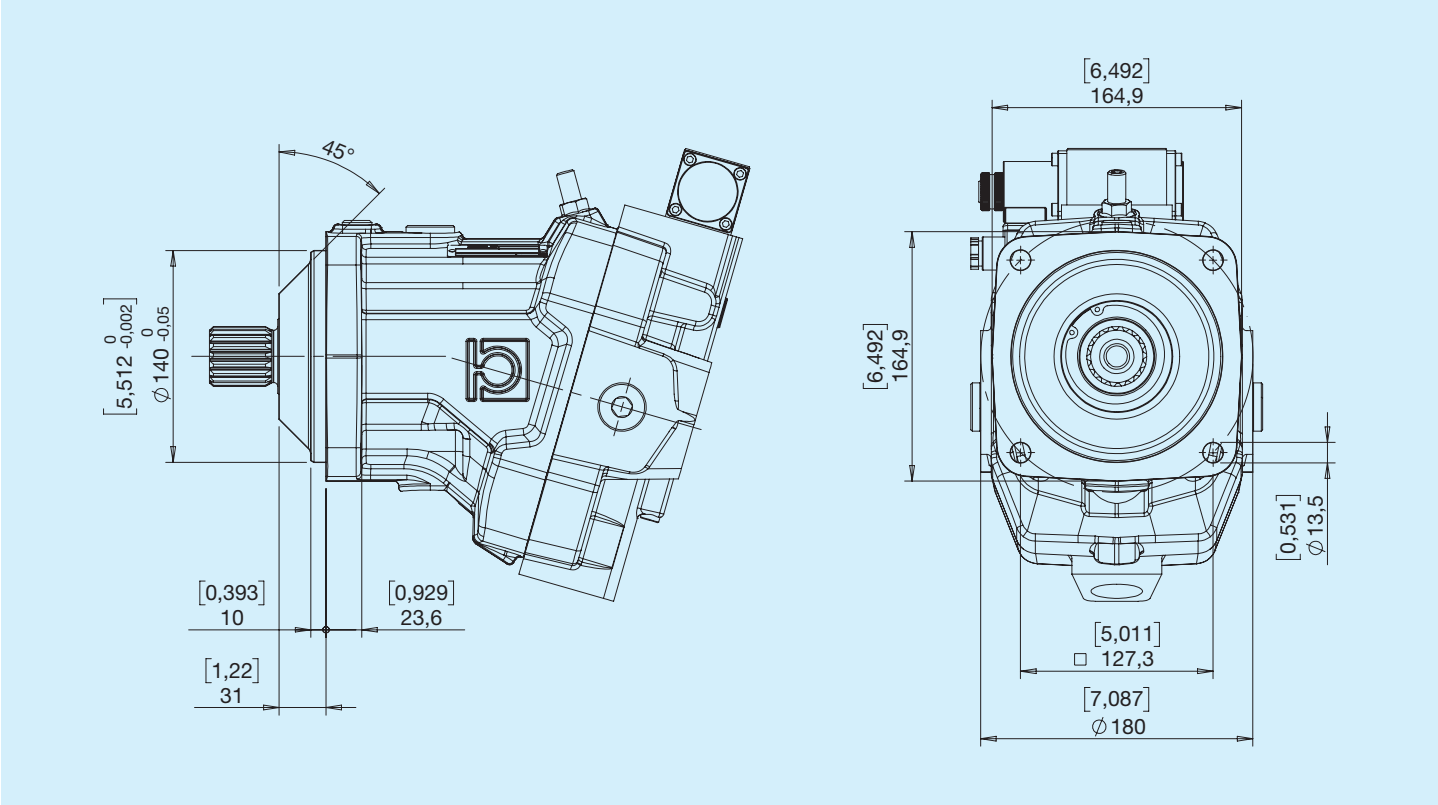

P ISO 2 holes cartridge centring

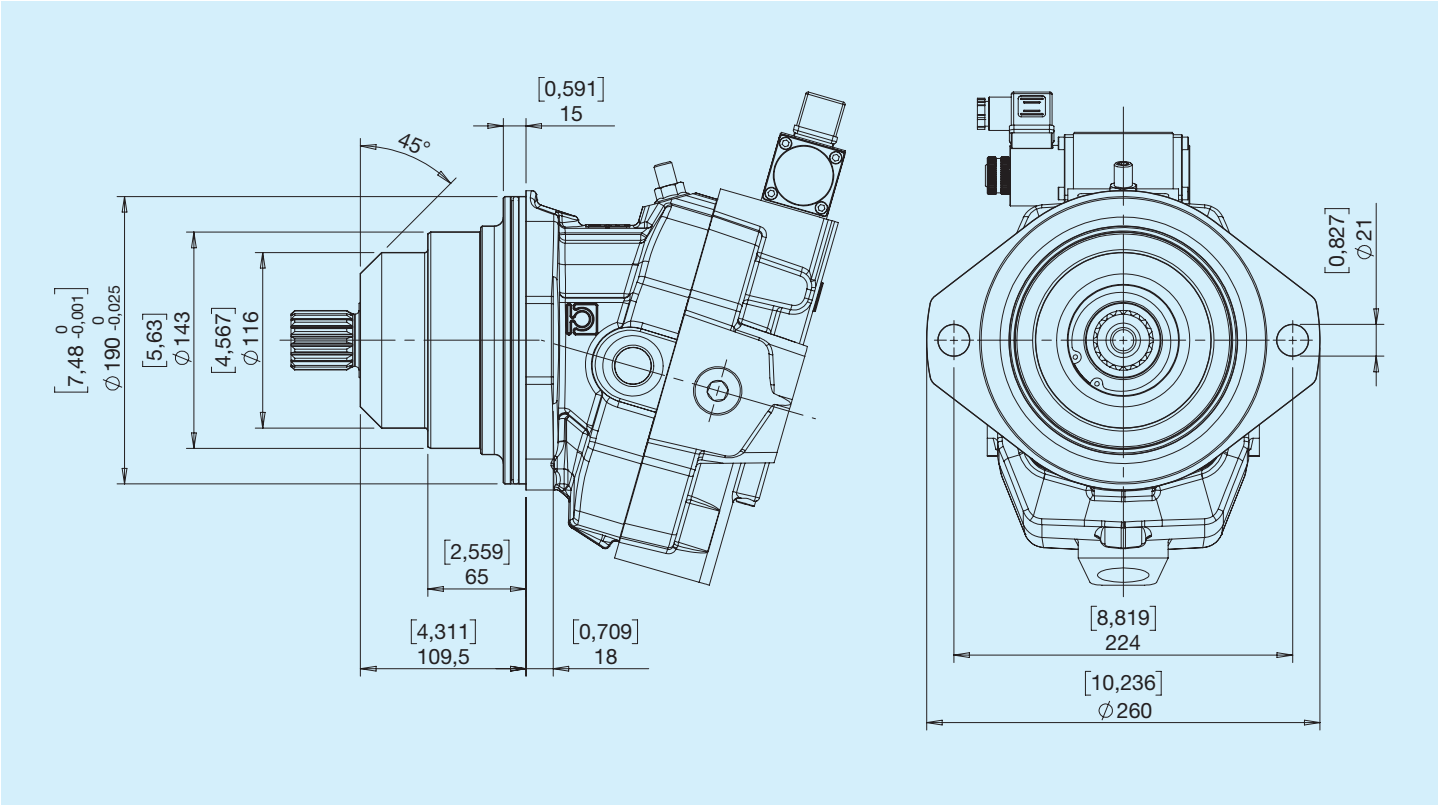

B DIN 5480 W40x2x30x18

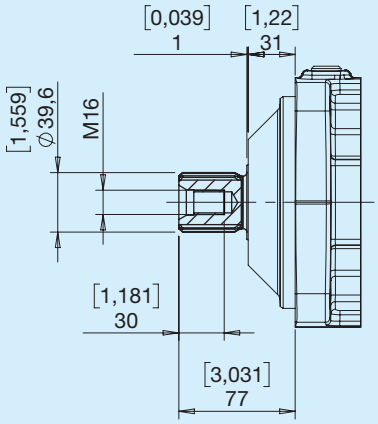

Max. torque 1310 Nm

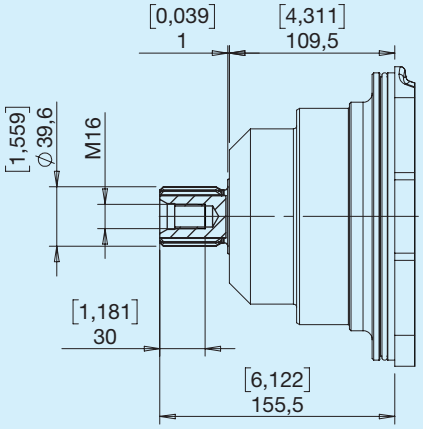

Max. torque 1310 Nm

C DIN 5480 W35x2x30x16

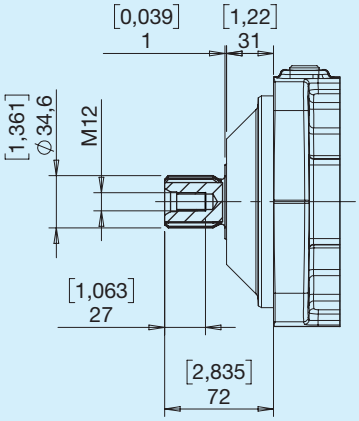

Max. torque 860 Nm

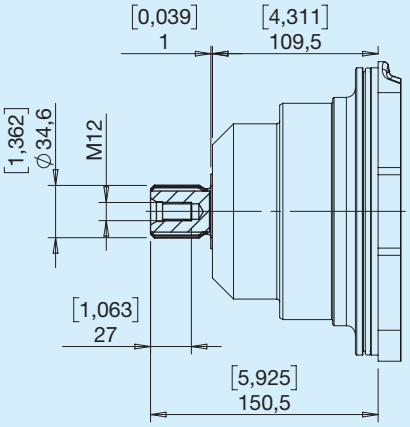

Max. torque 860 Nm

Type G

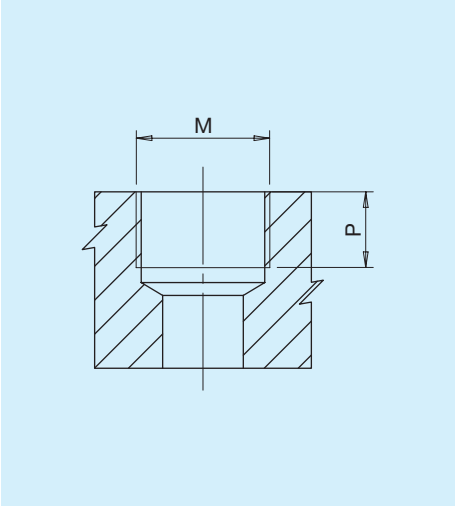

Type	M		P	
		Nm	**mm**	**in**
G2	Port ISO 1179-1 - G 1/4	17	8	0.31
G6	Port ISO 1179-1 - G 3/4	90	19	0.75
G7	Port ISO 1179-1 - G 1	160	19	0.75

Type U

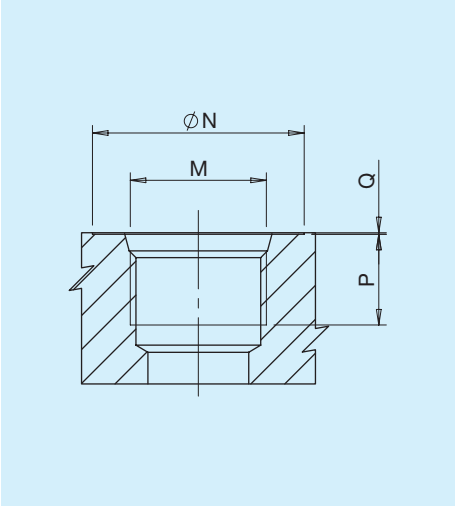

Type	Dim.	N		P		Q		M	
		mm	**in**	**mm**	**in**	**mm**	**in**		**Nm**
U2	1/4'	20	0.79	12	0.47	0.3	0.01	Port ISO 11926-1-7/16-20	17
U6	3/4'	41	1.61	20	0.79	0.3	0.01	Port ISO 11926-1-1 1/16-12	90
U7	1'	49	1.93	18	0.70	0.3	0.01	Port ISO 11926-1-1 5/16-12	160

Type N

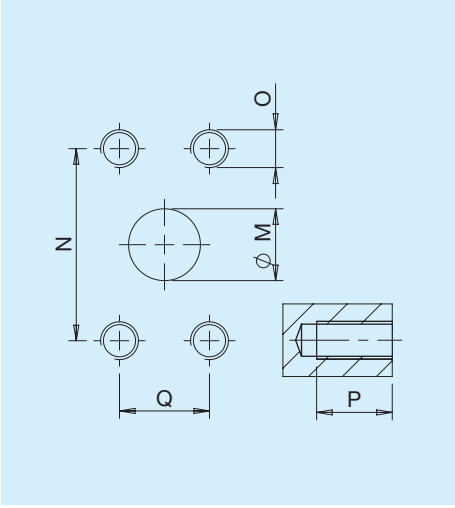

Type	M		N		Q		P		O	
	mm	**in**	**mm**	**in**	**mm**	**in**	**mm**	**in**		**Nm**
N7	25	1	57.15	2.25	27.76	1.09	20	0.79	M12	70

Combinations

Type	Inlet/outlet **A-B**	Drain port **L1-L2**	Pilot **a-b-x**
G	G6	G6	G6
U	U6	U6	U6
N	N7	G6	G2
M	N7	U6	U2

P Rear

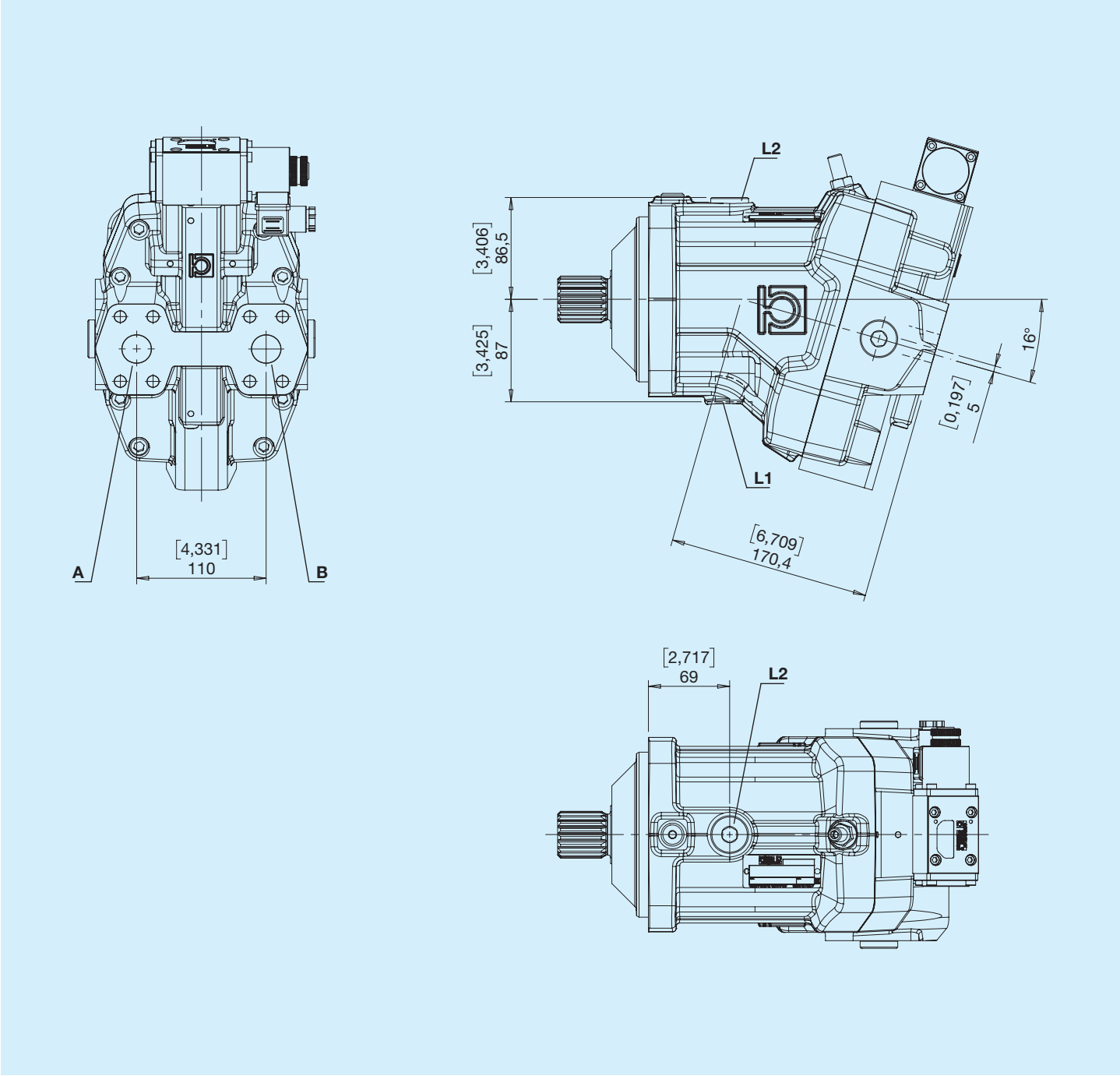

A,B - Use
L1, L2 - Drain port

L Opposite sideways

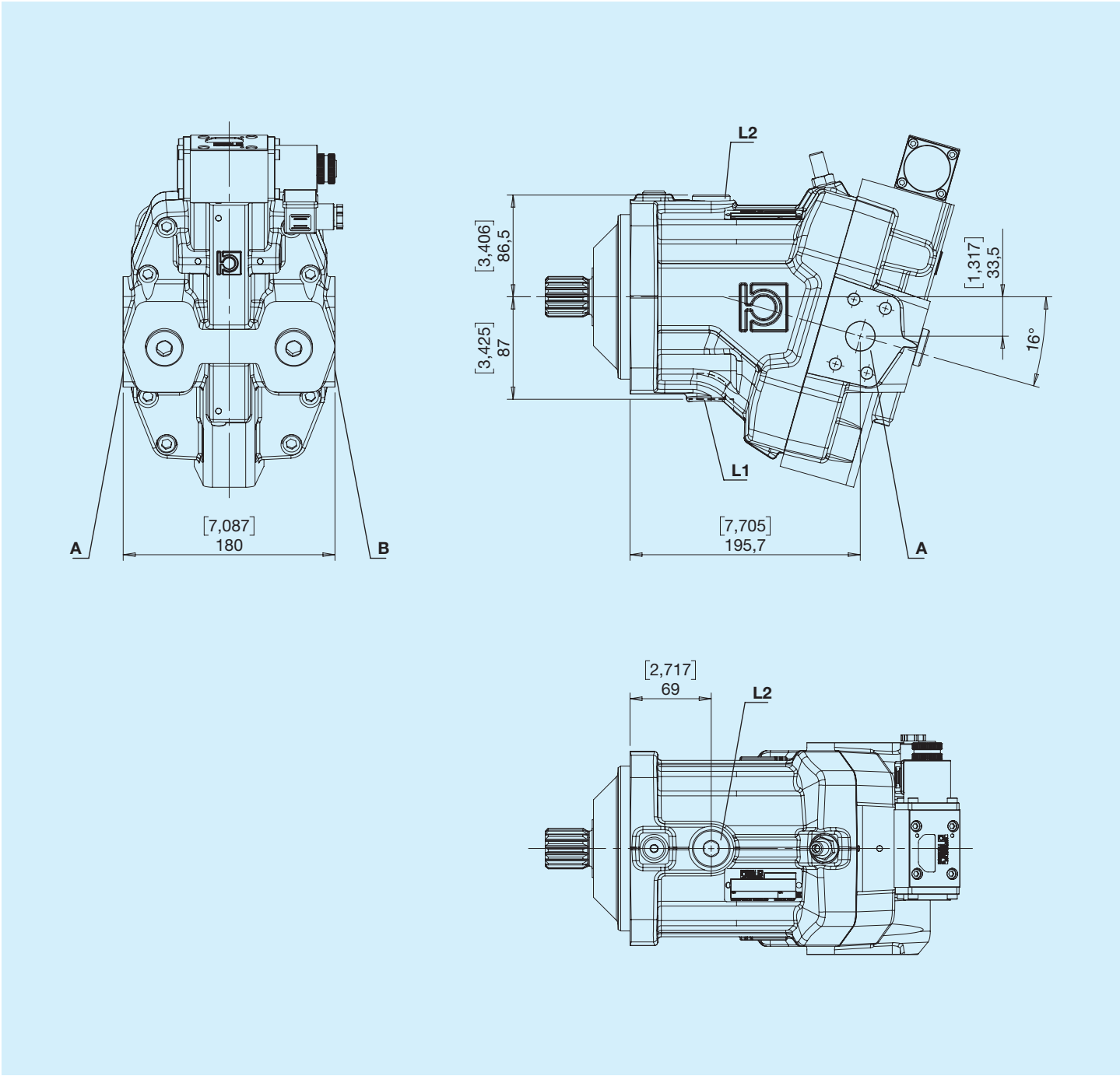

A,B - Use
L1, L2 - Drain port

Y Rear with rotated valve

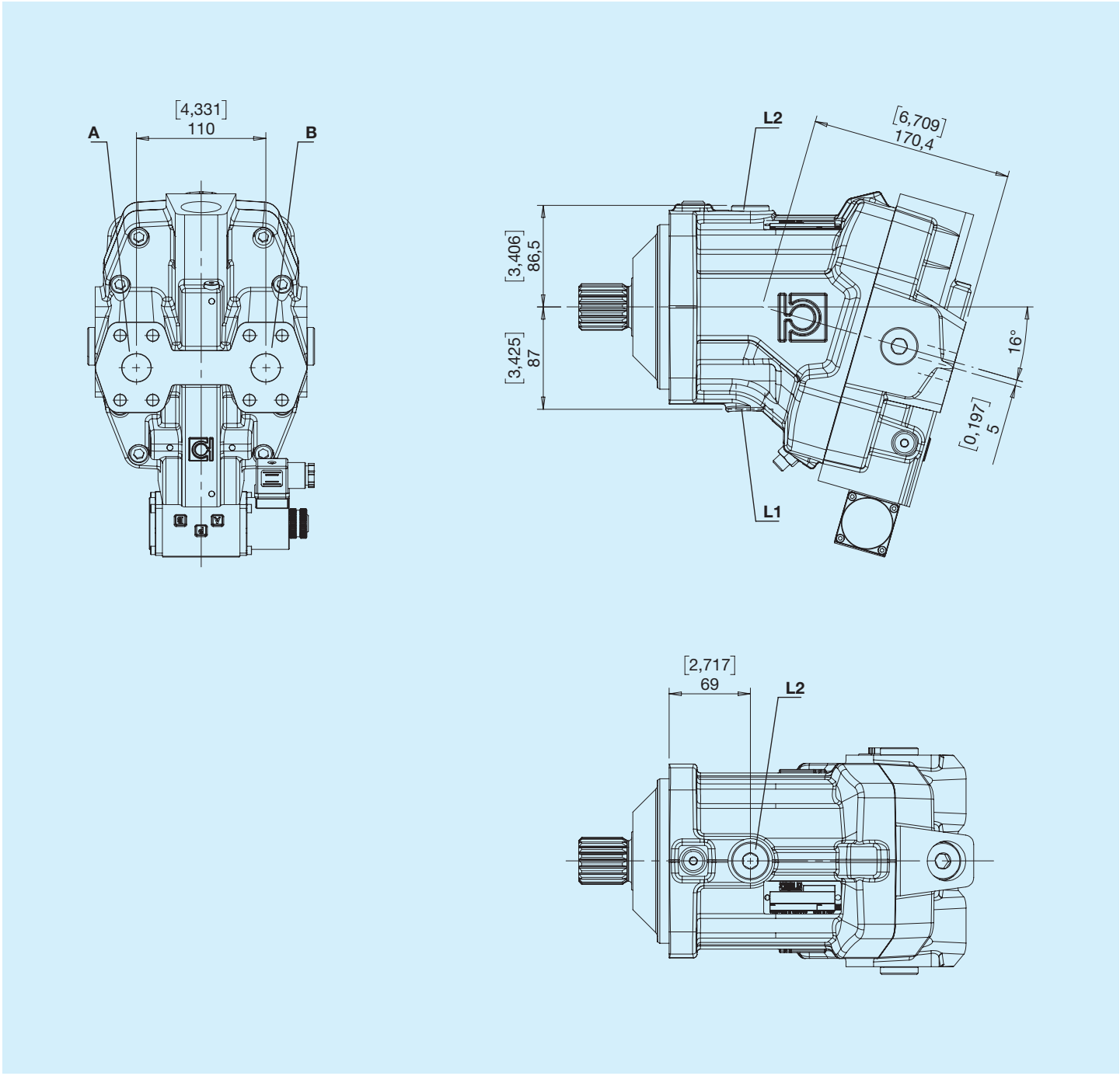

A,B - Use
L1, L2 - Drain port

J Opposite sideways with rotated valve

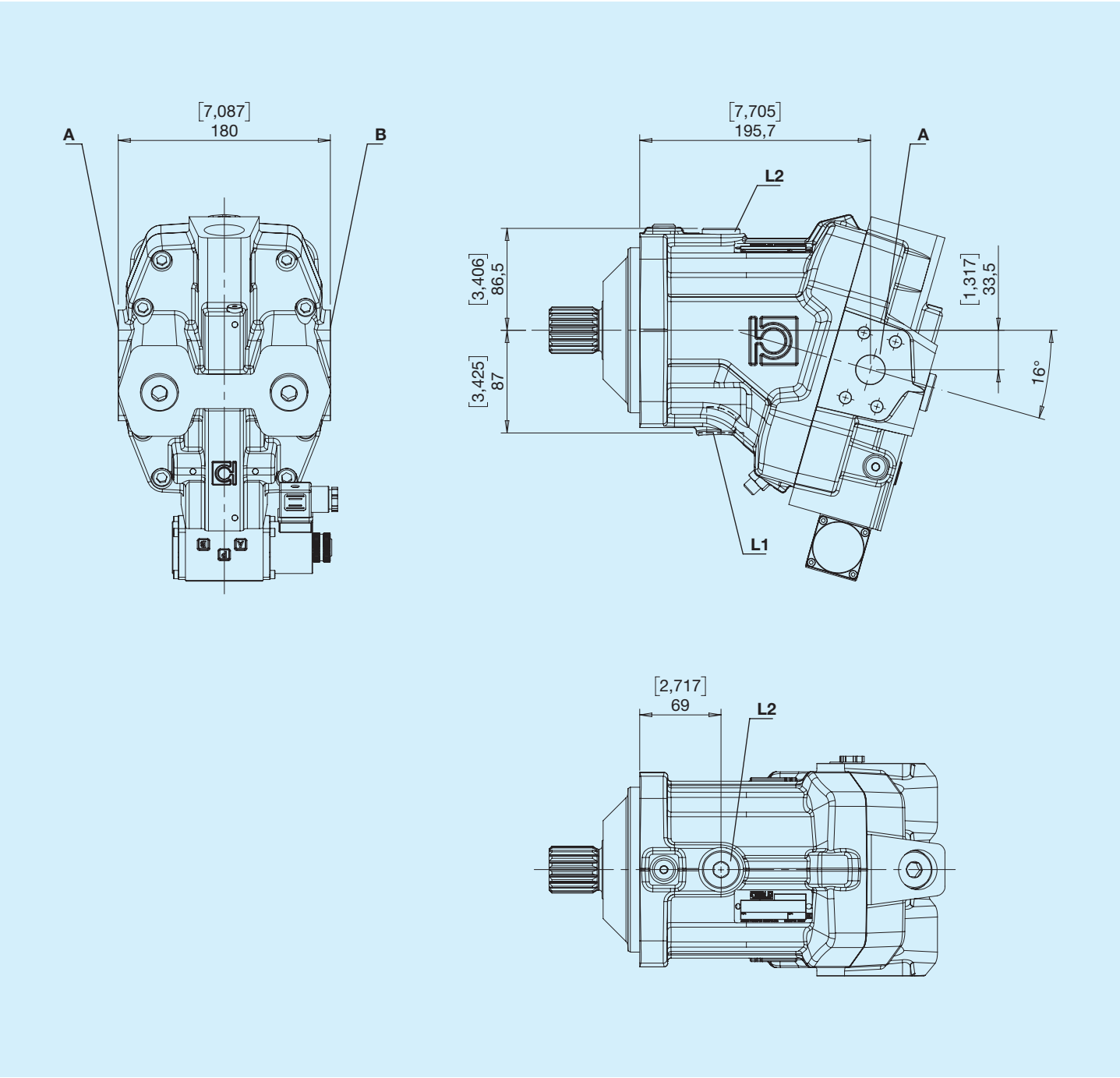

A,B - Use
L1, L2 - Drain port

A Hydraulic automatic, ON/OFF

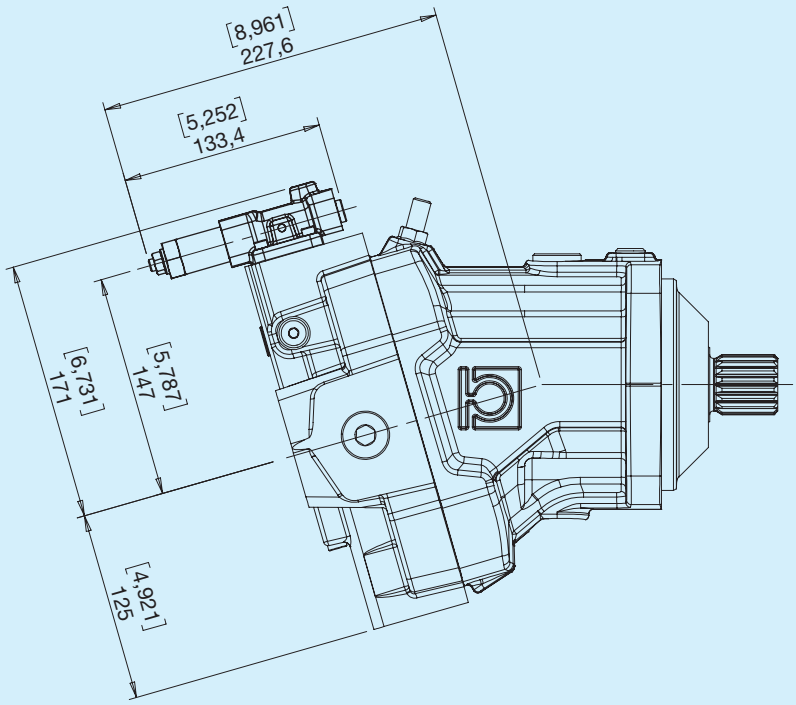

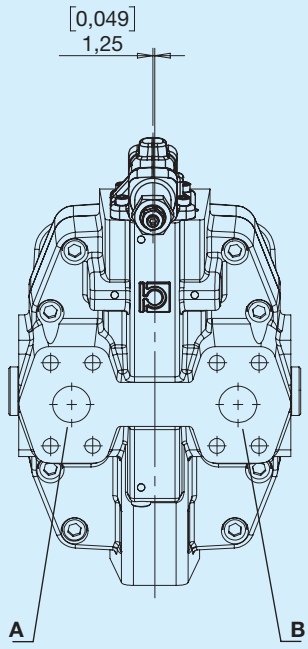

Inlet	Rotation
Right	Left
Right	Right

Pilot

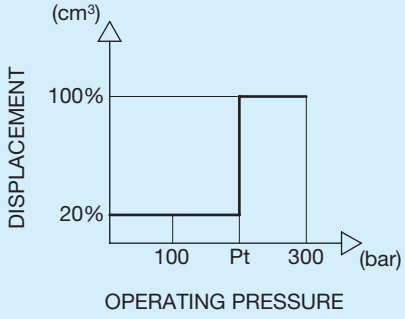

Pt - Calibration pressure (according to customer specifications)

Hydraulic diagram

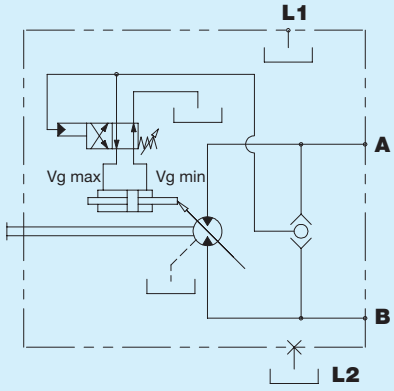

E Electric 2-position 12V

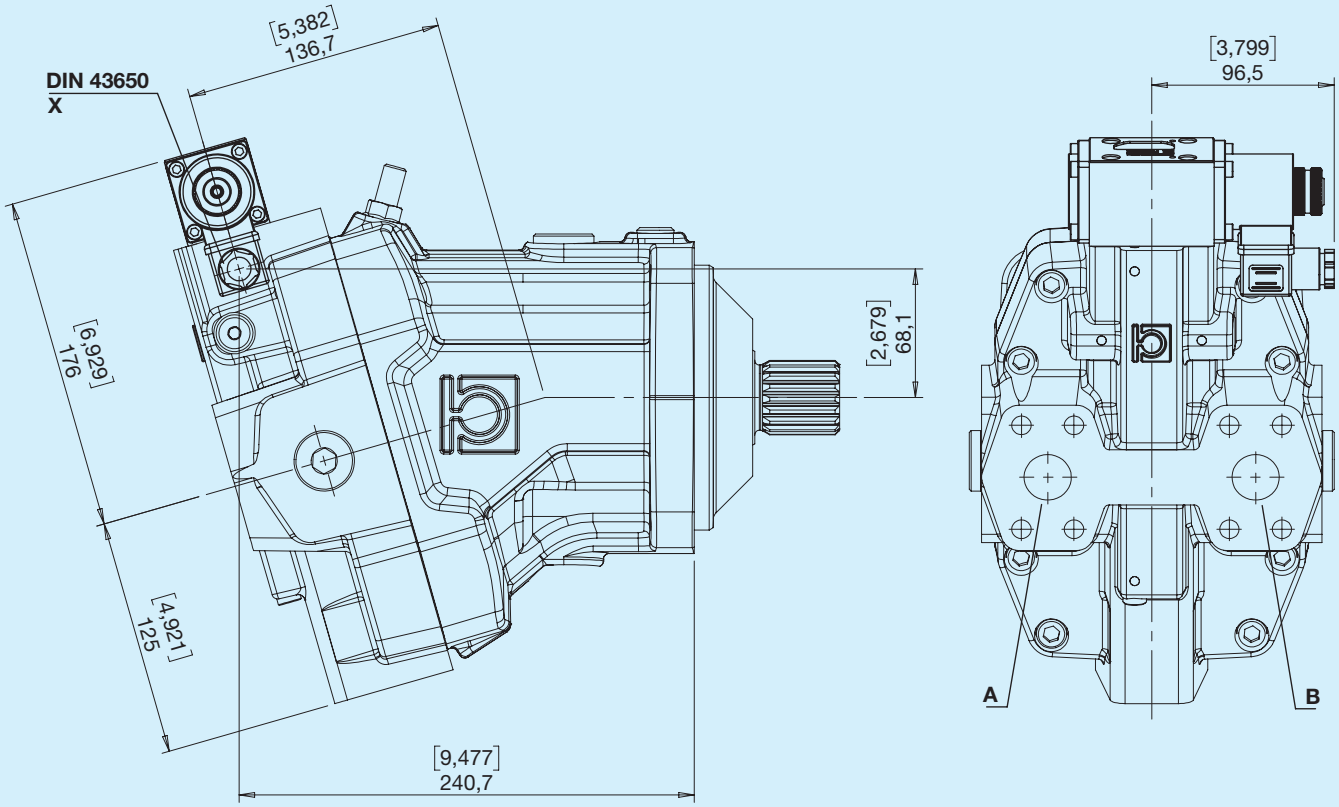

X - Solenoid valve available on request with DEUTSCH DT04-2P connectors

Inlet	Rotation
Right	Left
Right	Right

Hydraulic diagram

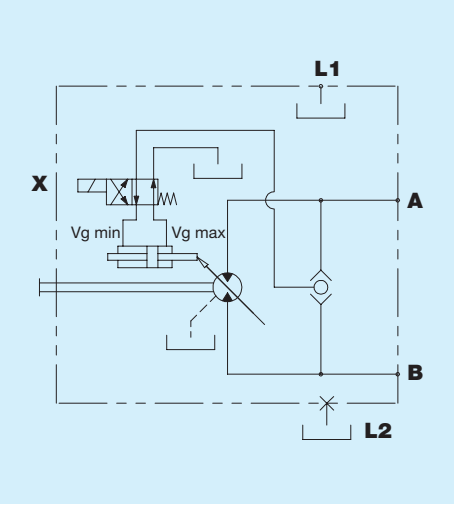

F Electric 2-position 24V

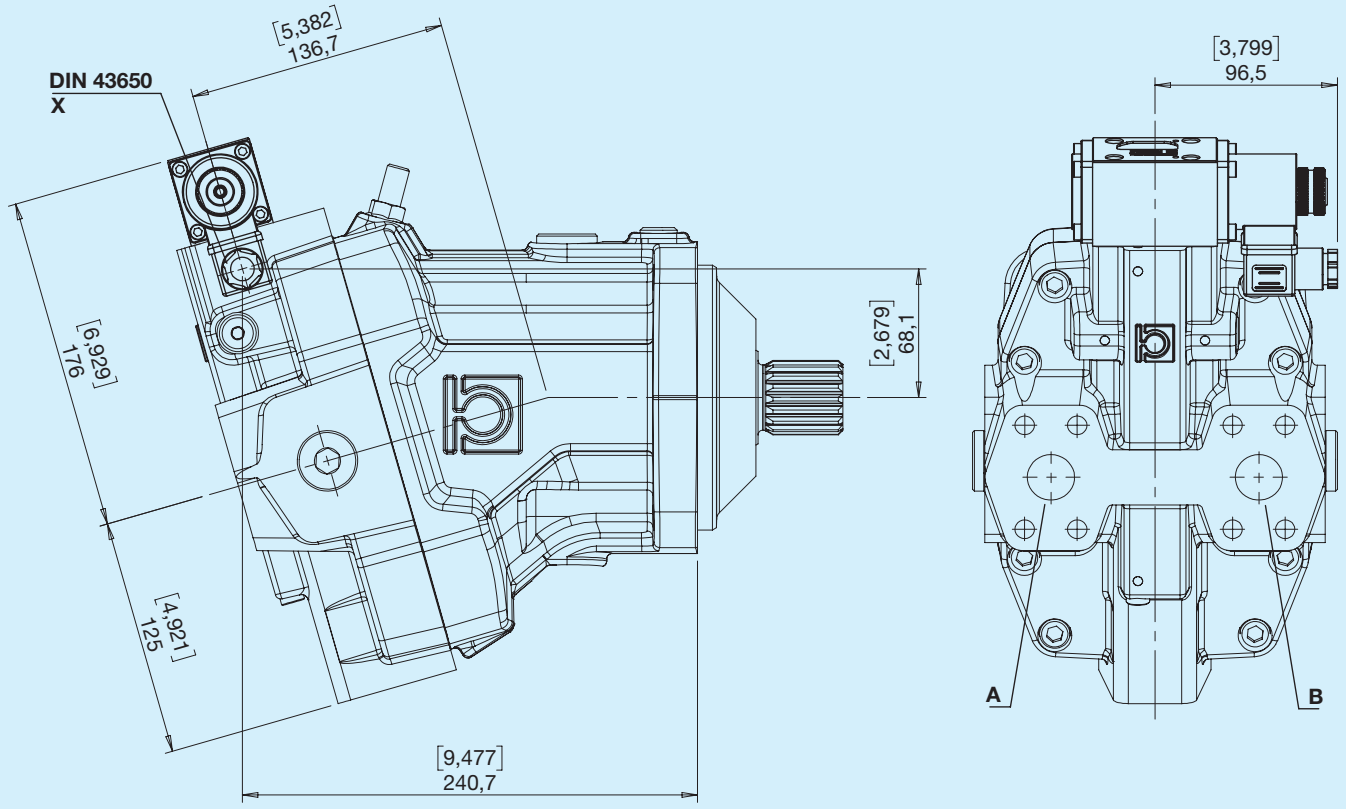

X - Solenoid valve available on request with DEUTSCH DT04-2P connectors

Inlet	Rotation
Right	Left
Right	Right

Hydraulic diagram

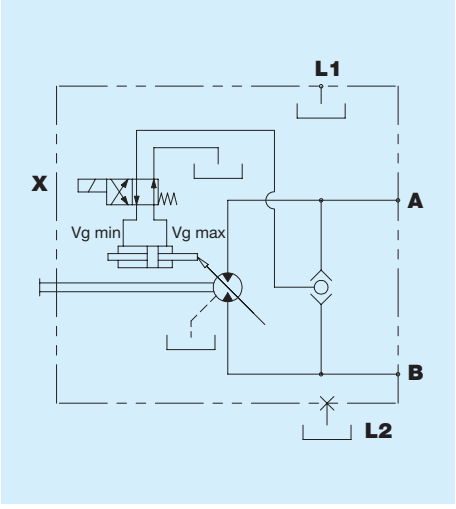

G Proportional hydraulic

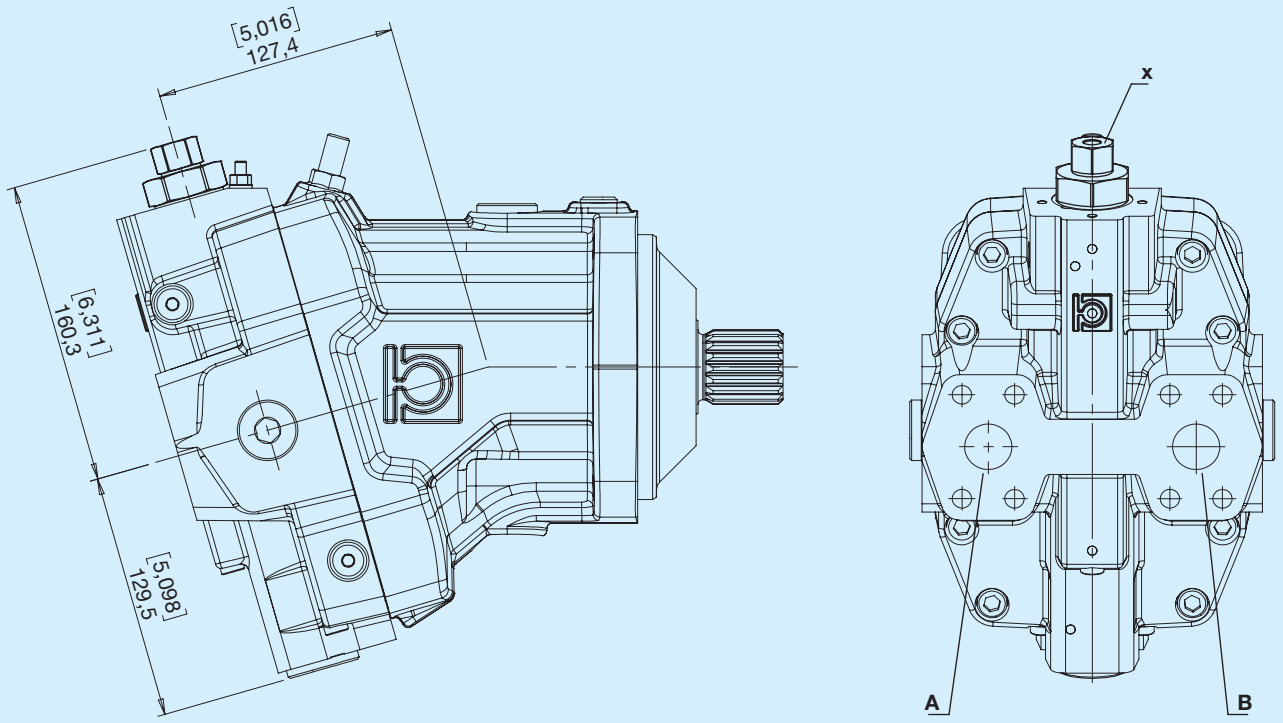

X - Pilot G1/8

Inlet	Rotation
Right	Left
Right	Right

Pilot

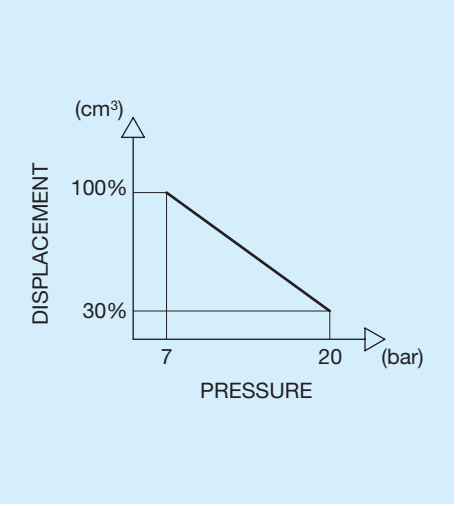

Hydraulic diagram

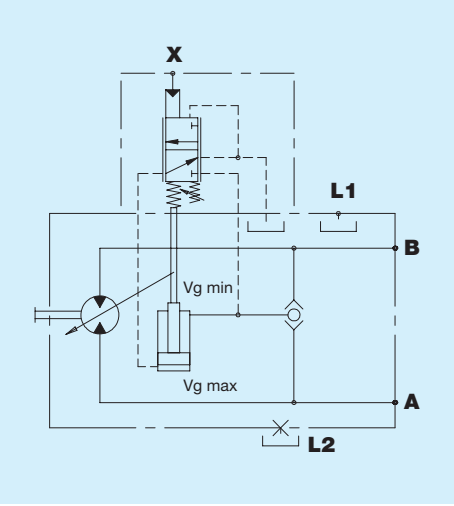

H Direct hydraulic, 2-position

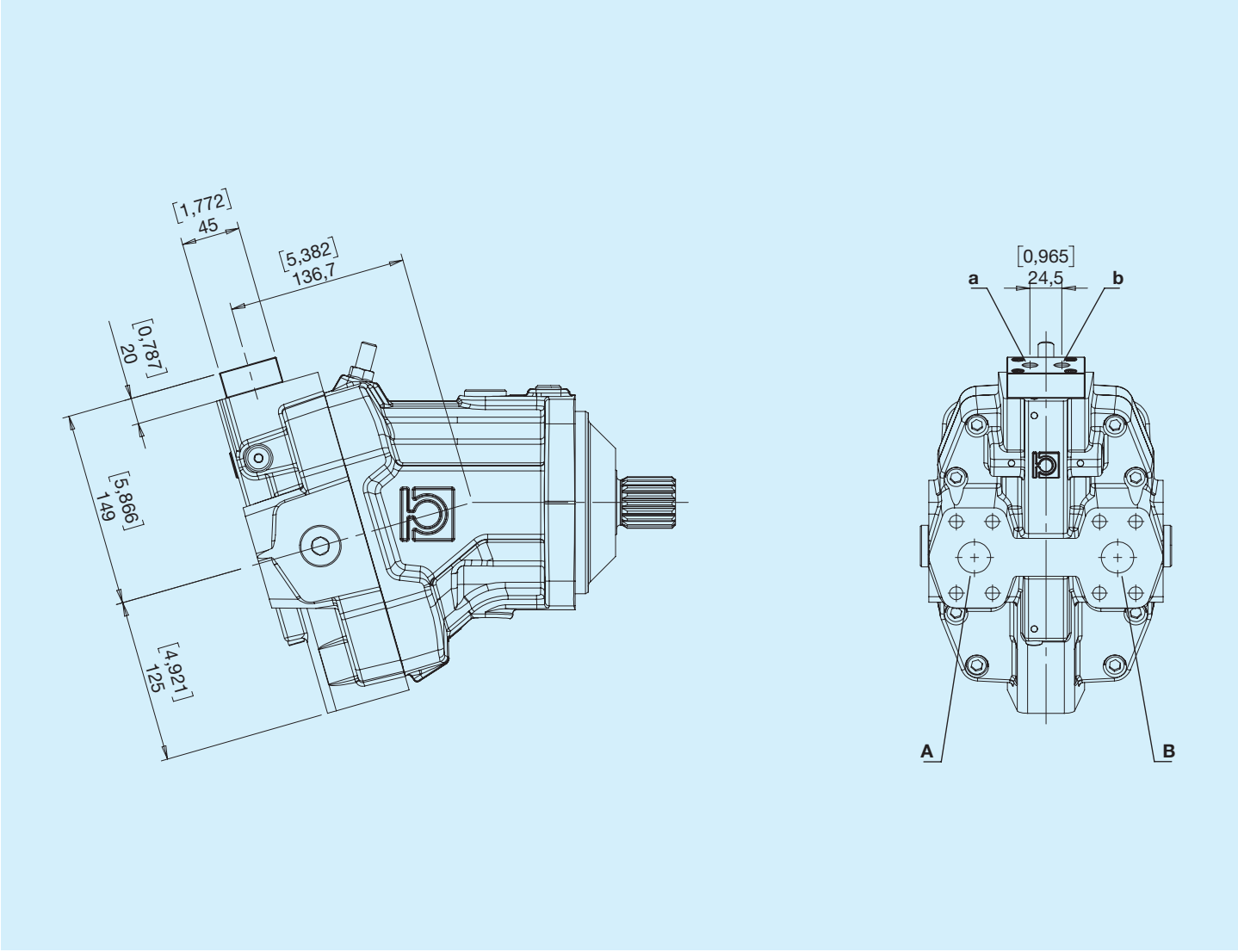

Inlet	Rotation
Right	Left
Right	Right

Pilot

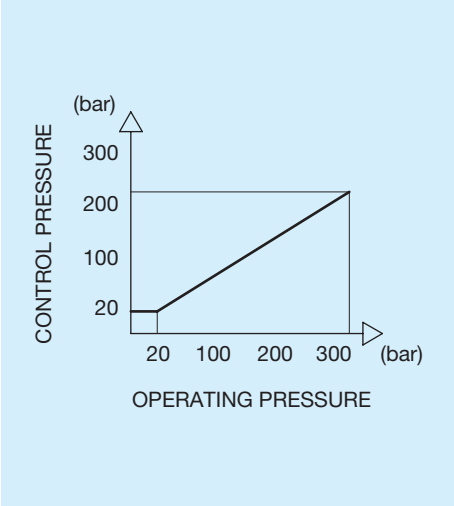

Hydraulic diagram

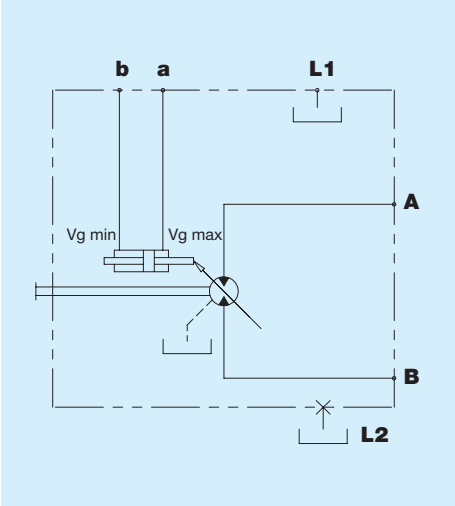

K Hydraulic, 2-position, low pressure

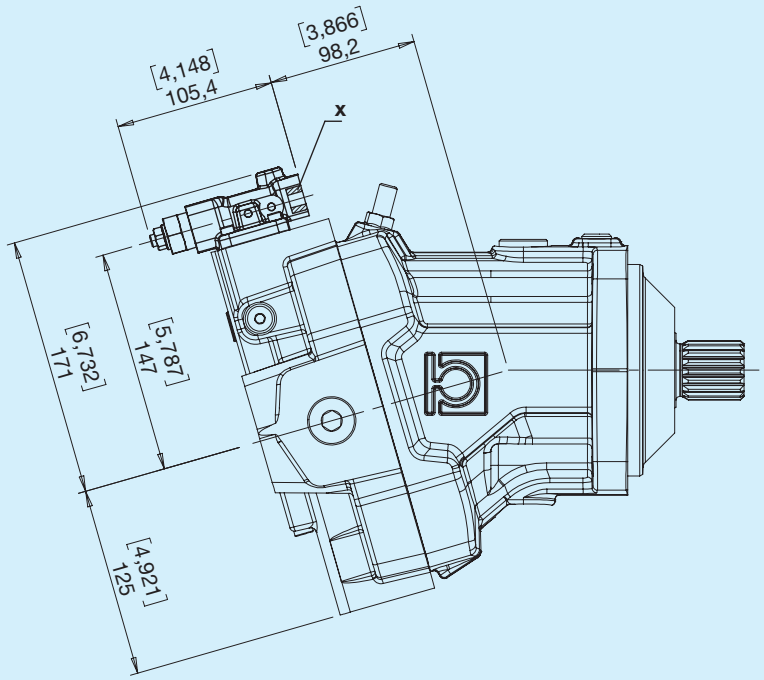

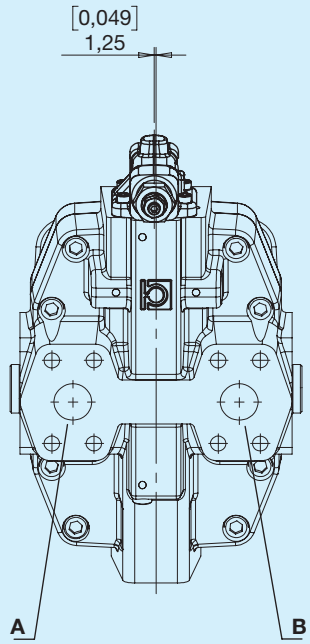

X - Pilot G1/8

Inlet	Rotation
Right	Left
Right	Right

Diagram

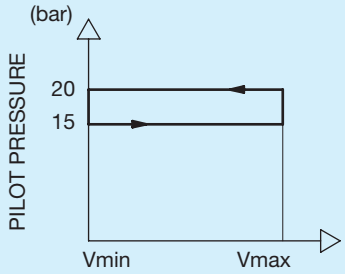

The motor is normally at maximum displacement. By applying external pressure to the pilot valve, the motor switches to minimum displacement. For correct displacement variation, observe the pilot pressure values shown in the diagram.

Hydraulic diagram

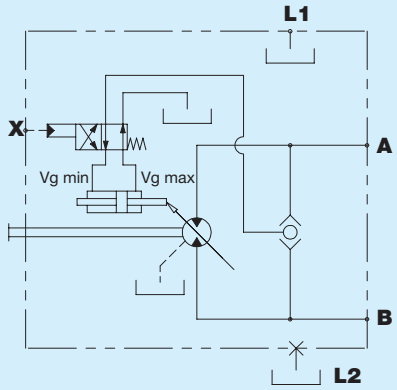

O Electronic proportional feedback control 12V

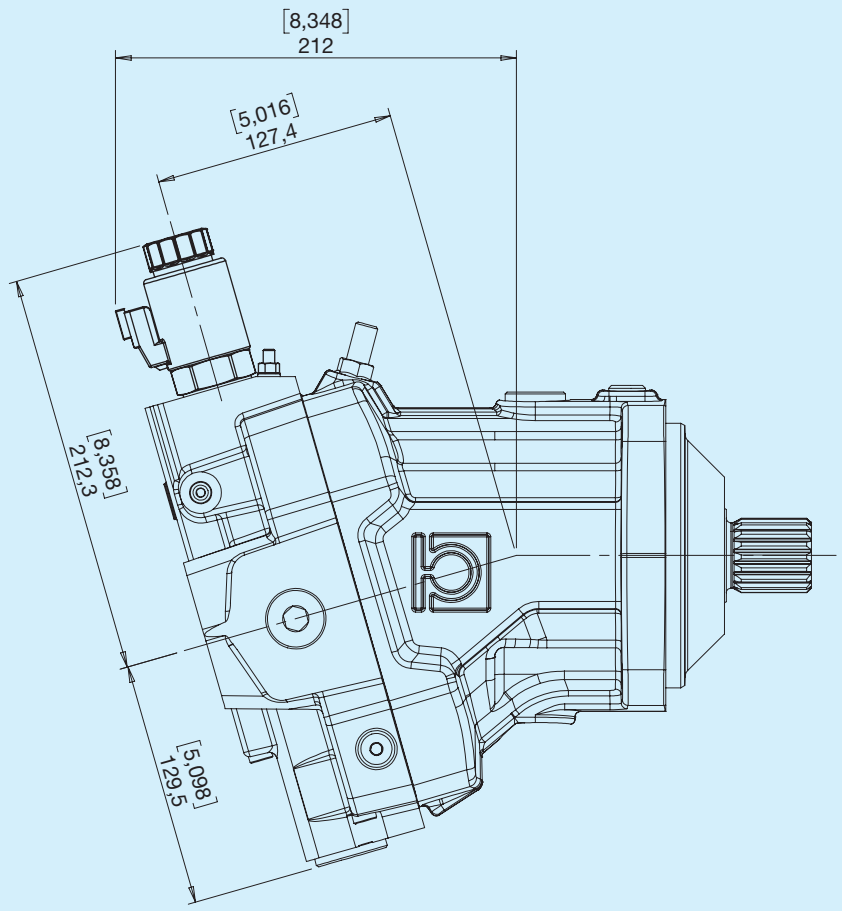

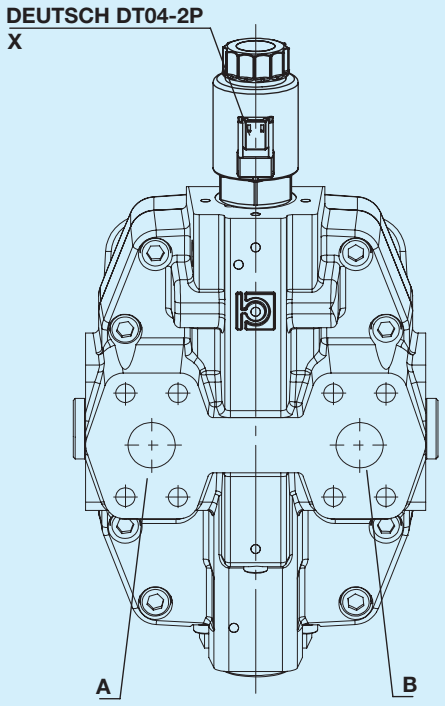

X - Solenoid valve

Inlet	Rotation
Right	Left
Right	Right

Pilot

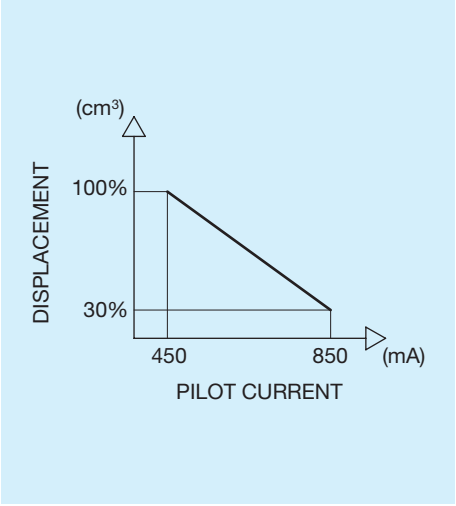

Hydraulic diagram

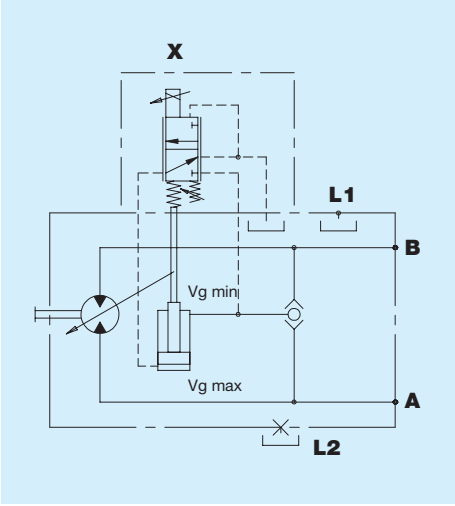

V Electronic proportional feedback control 24V

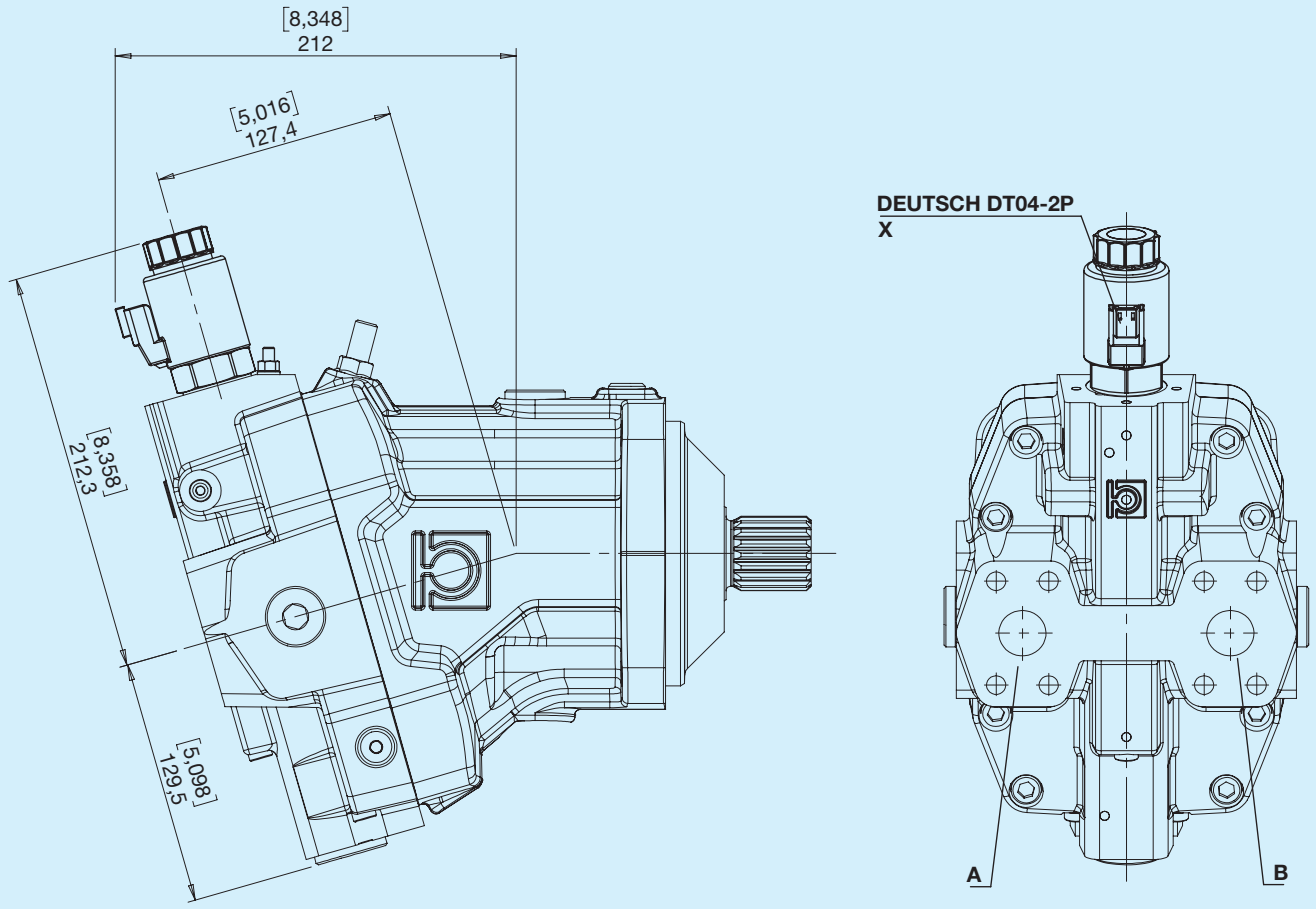

X - Solenoid valve

Inlet	Rotation
Right	Left
Right	Right

Pilot

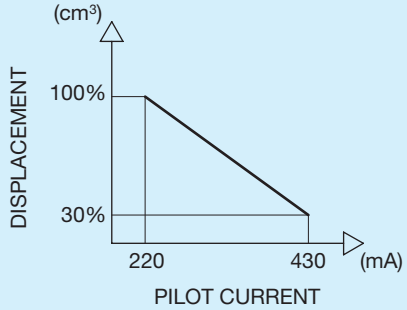

Hydraulic diagram

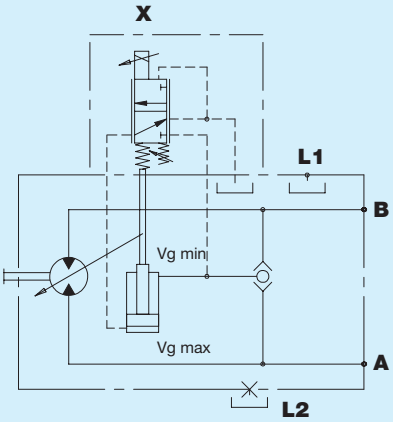

R Electric ON/OFF with pressure override and channel selector

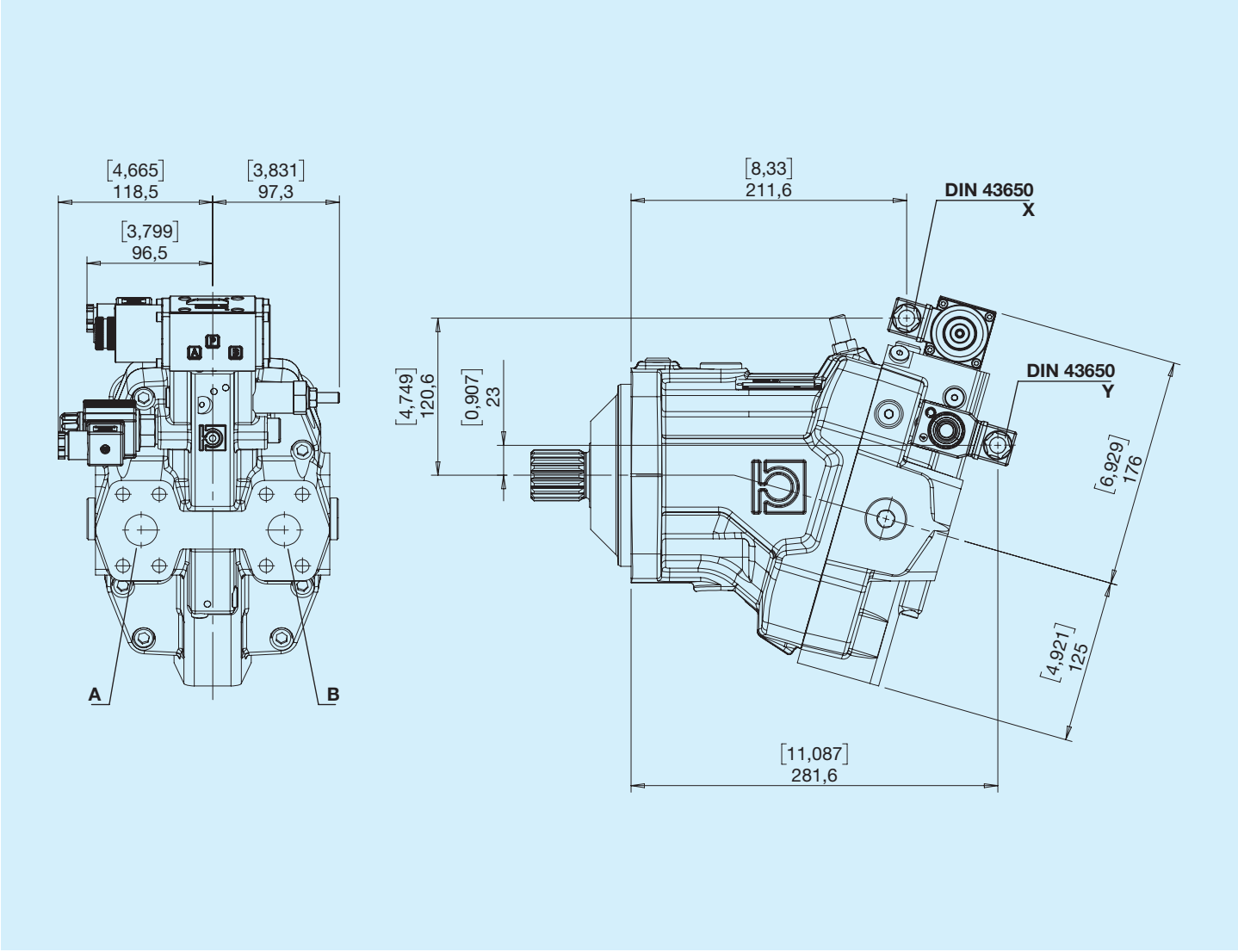

Inlet	Rotation
Right	Left
Right	Right

Hydraulic diagram

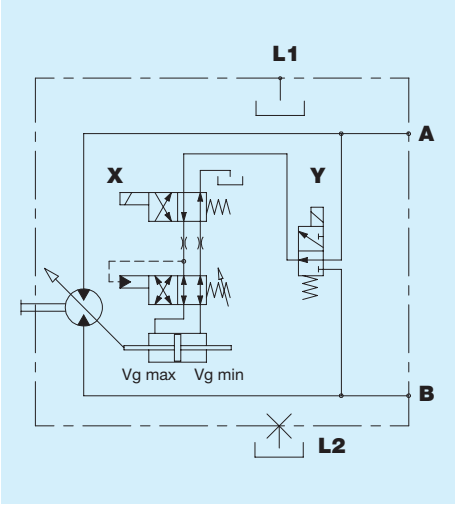

U Electric ON/OFF with pressure override

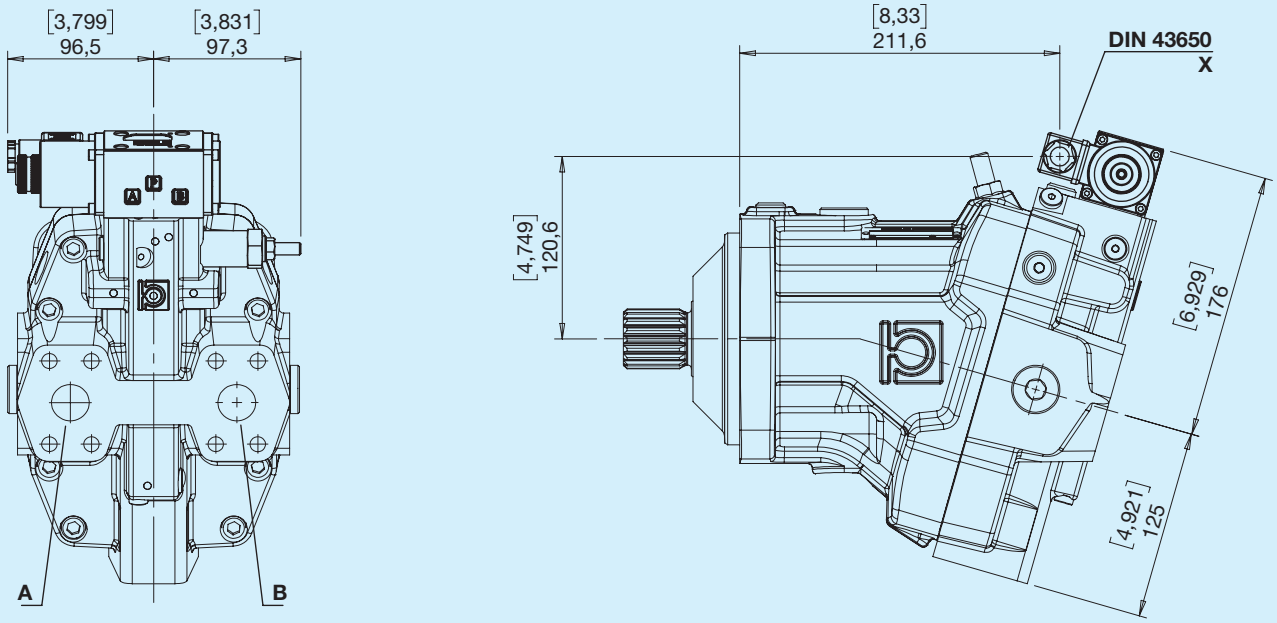

Inlet	Rotation
Right	Left
Right	Right

Hydraulic diagram

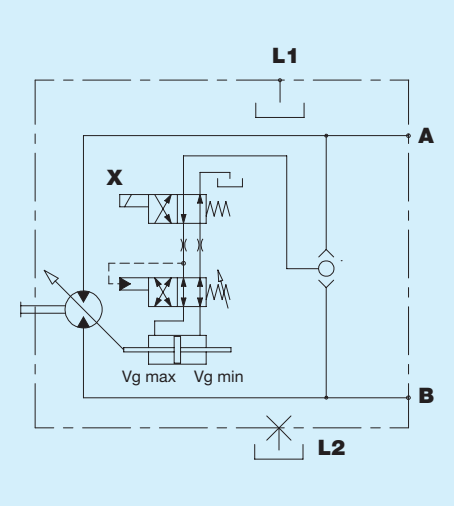

V Flushing valve (5-7 l/min)

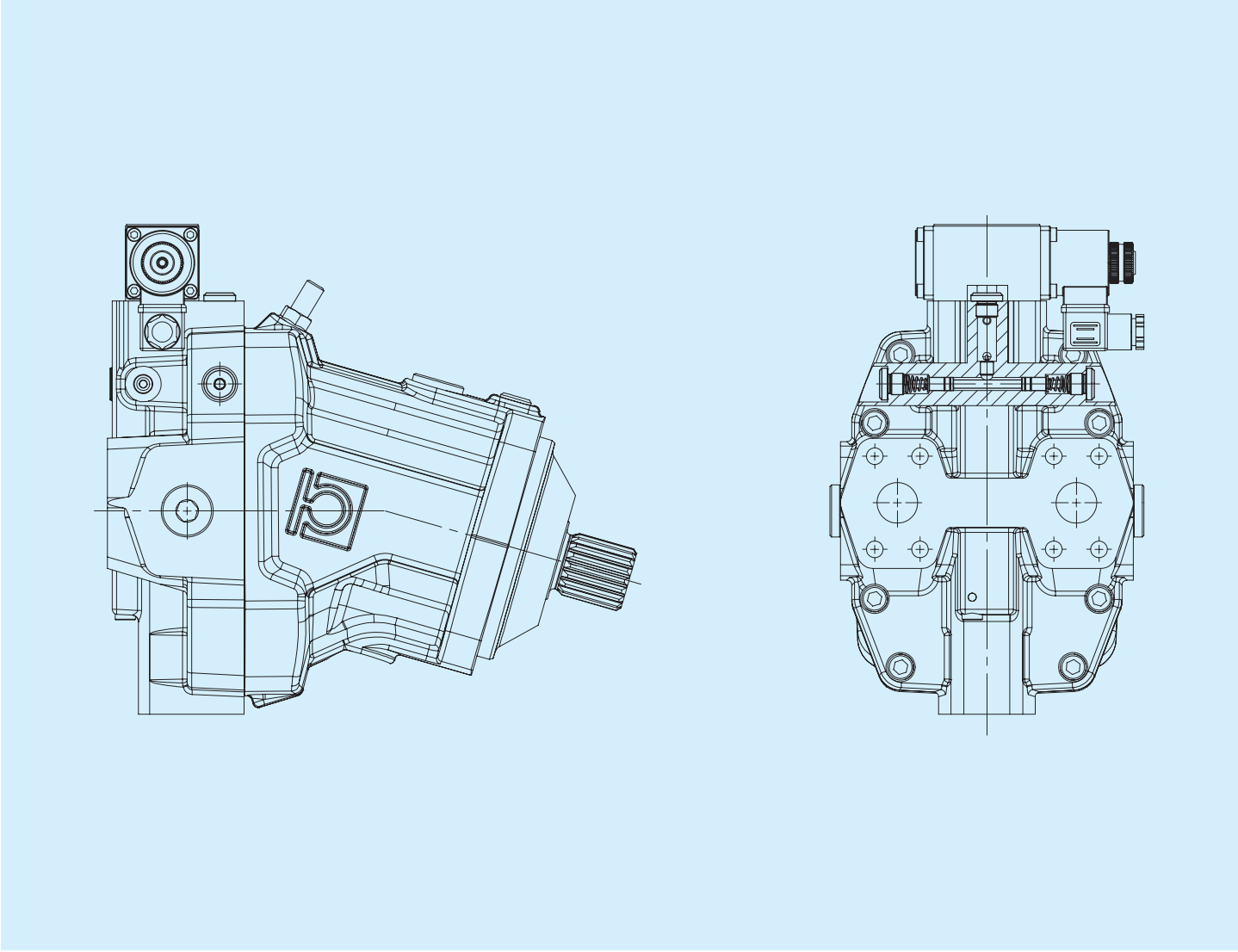

Hydraulic diagram

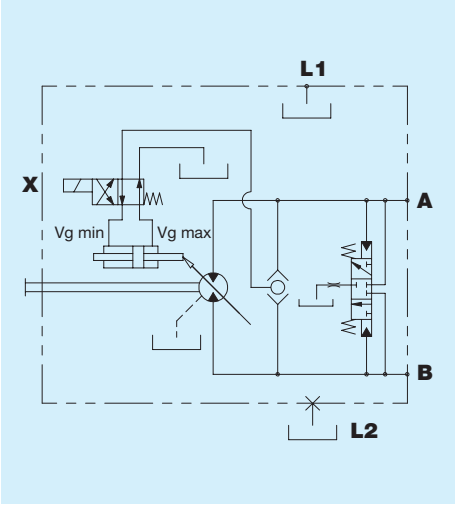

Instructions for ordering

HPBA 080-108	1	2	3	4	5	6	7	8	9	10	11	12	13	14

1 2 3 — Standard displacement

080	**108**

4 5 — Minimum displacement

...

6 — Flanges

I	ISO 4 holes standard	**P**	ISO 2 holes cartridge centring

7 — Shafts

B	DIN 5480 W40x2x30x18	**C**	DIN 5480 W35x2x30x16

8 — Type of ports

G	Gas	**U**	UNF	**N**	Gas-SAE inlet/outlet	**M**	UNF-SAE inlet/outlet

9 — Position of ports

P	Rear	**L**	Opposite sideways	**Y**	Rear with rotated valve (not available for O - V - G controls)	**J**	Opposite sideways with rotated valve (not available for O - V - G controls)

10 — Controls

A	Hydraulic automatic, ON/OFF	**G**	Proportional hydraulic	**O**	Electronic proportional feedback control 12V	**U**	Electric ON/OFF with pressure override
E	Electric 2-position 12V	**H**	Direct hydraulic, 2-position	**V**	Electronic proportional feedback control 24V		
F	Electric 2-position 24V	**K**	Hydraulic, 2-position, low pressure	**R**	Electric ON/OFF with pressure override and channel selector		

11 — Accessories

0	No option	**V**	Flushing valve	**V**	Flushing valve

12 13 14 — Special versions

...

Variable-displacement motors HPBA110-130

Before use, carefully read the GENERAL INSTRUCTIONS FOR USE OF CLOSED CIRCUIT AXIAL PISTON PUMPS AND MOTORS.

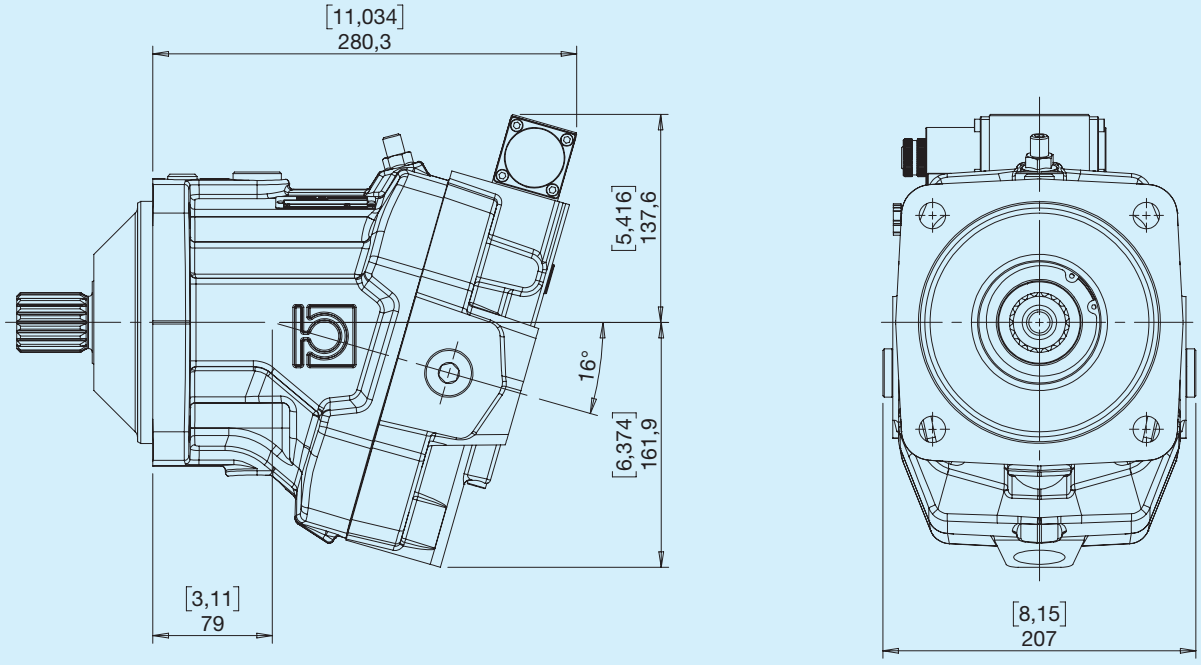

HPBA	Theoretical displacement		Swash plate	Continuous Pressure		Intermittent pressure		Peak pressure		Rotational speed			Weight	
	cm³	**in³**	**°**	**bar**	**psi**	**bar**	**psi**	**bar**	**psi**	**MAX (max V) min⁻¹**	**MAX (min V) min⁻¹**	**MIN min⁻¹**	**kg**	**lbs**
110	110	6.65	26	350	5075	400	5800	450	6525	2900	**4500**	500	45	99
130	130	7,93	25	350	5075	400	5800	450	6525	2900	**4500**	500	51	112

I ISO 4 holes standard

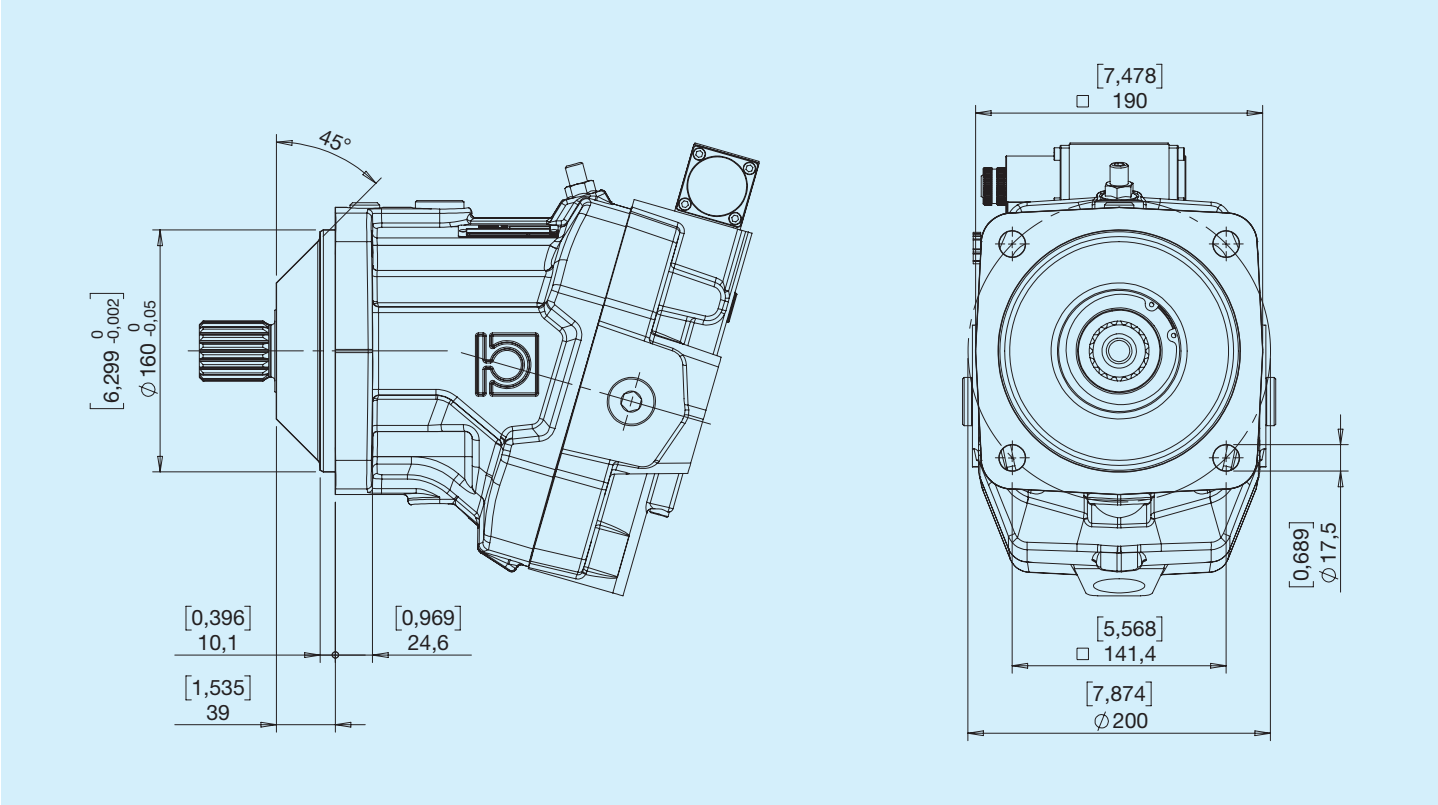

P ISO 2 holes cartridge centring

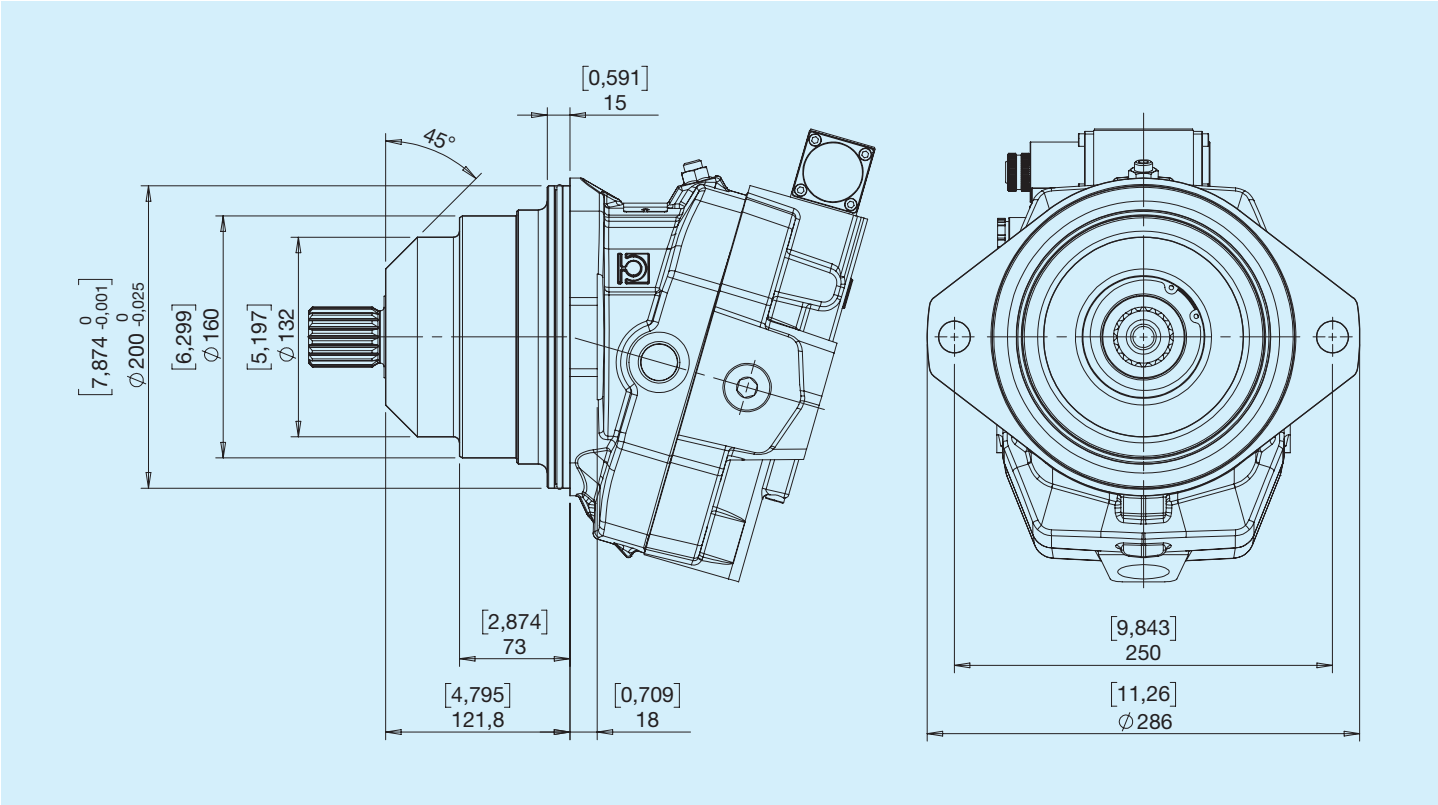

B DIN 5480 W40x2x30x18

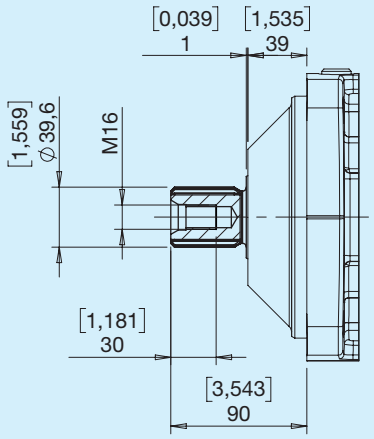

Max. torque 1310 Nm

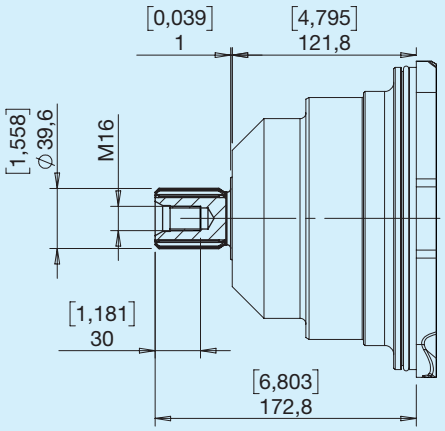

Max. torque 1310 Nm

D DIN 5480 W45x2x30x21

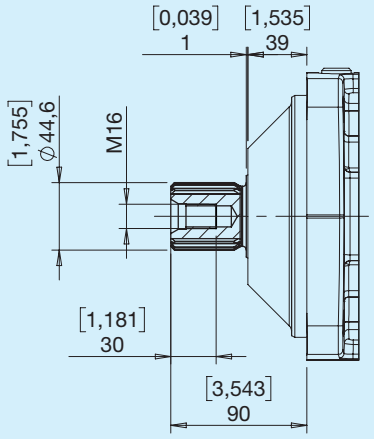

Max. torque 1980 Nm

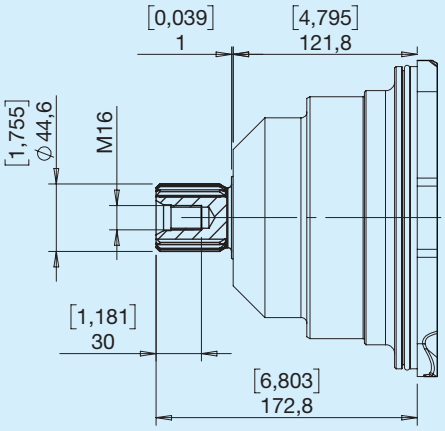

Max. torque 1980 Nm

Type G

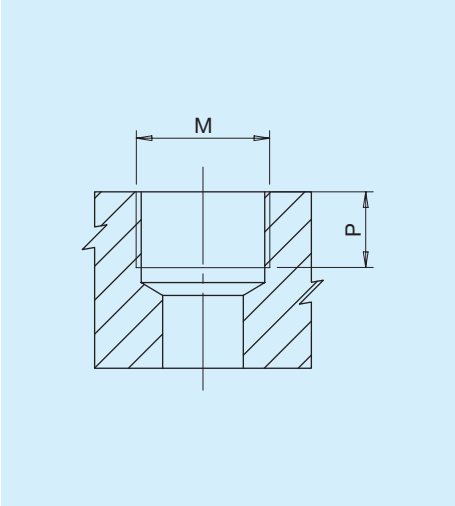

Type	M		P	
		Nm	**mm**	**in**
G2	Port ISO 1179-1 - G 1/4	17	8	0.31
G6	Port ISO 1179-1 - G 3/4	90	19	0.75
G7	Port ISO 1179-1 - G 1	160	19	0.75

Type U

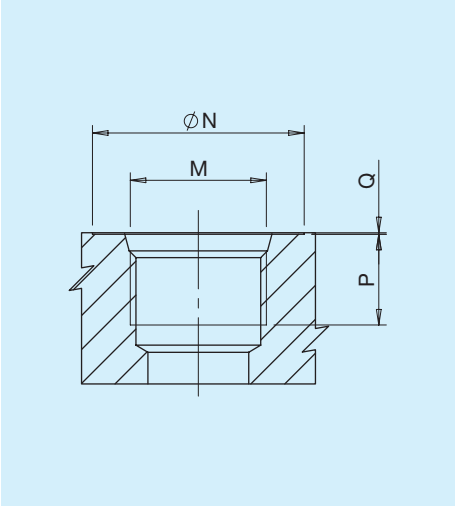

Type	Dim.	N		P		Q		M	
		mm	**in**	**mm**	**in**	**mm**	**in**		**Nm**
U2	1/4'	20	0.79	12	0.47	0.3	0.01	Port ISO 11926-1-7/16-20	17
U6	3/4'	41	1.61	20	0.79	0.3	0.01	Port ISO 11926-1-1 1/16-12	90
U7	1'	49	1.93	18	0.70	0.3	0.01	Port ISO 11926-1-1 5/16-12	160

Type N

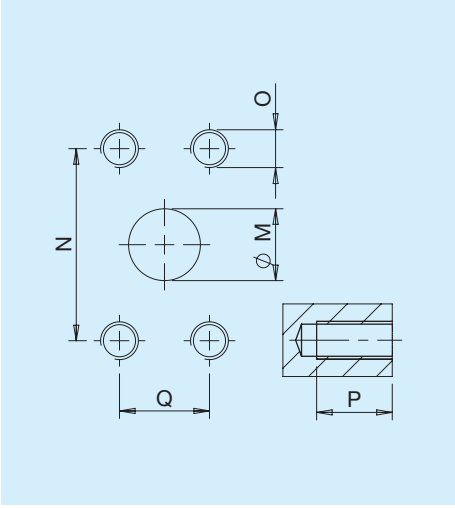

Type	M		N		Q		P		O	
	mm	**in**	**mm**	**in**	**mm**	**in**	**mm**	**in**		**Nm**
N7	25	1	57.15	2.25	27.76	1.09	20	0.79	M12	70

Combinations

Type	Inlet/outlet **A-B**	Drain port **L1-L2**	Pilot **a-b-x**
G	G6	G6	G6
U	U6	U6	U6
N	N7	G6	G2
M	N7	U6	U2

P Rear

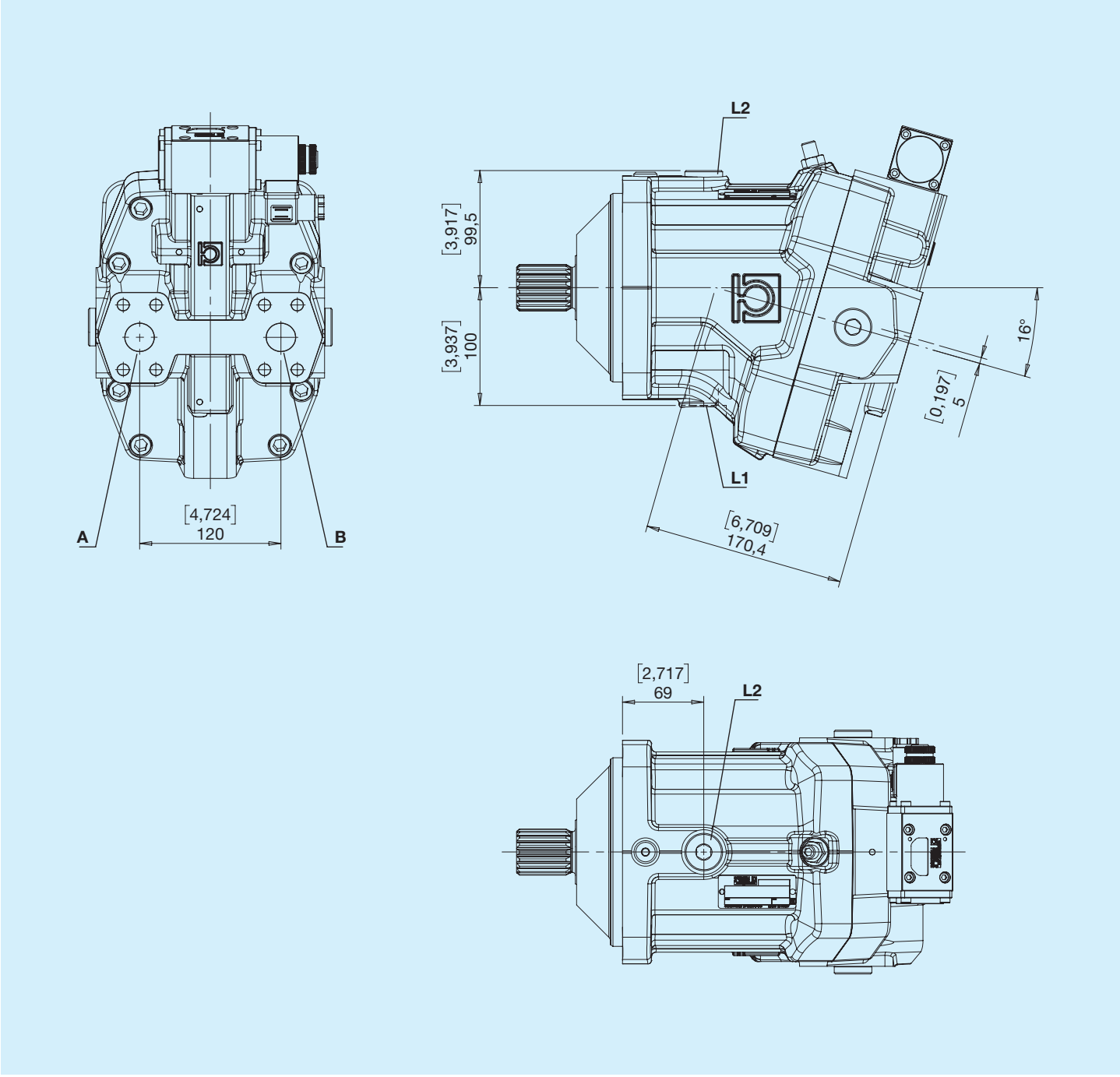

A,B - Use
L1, L2 - Drain port

L Opposite sideways

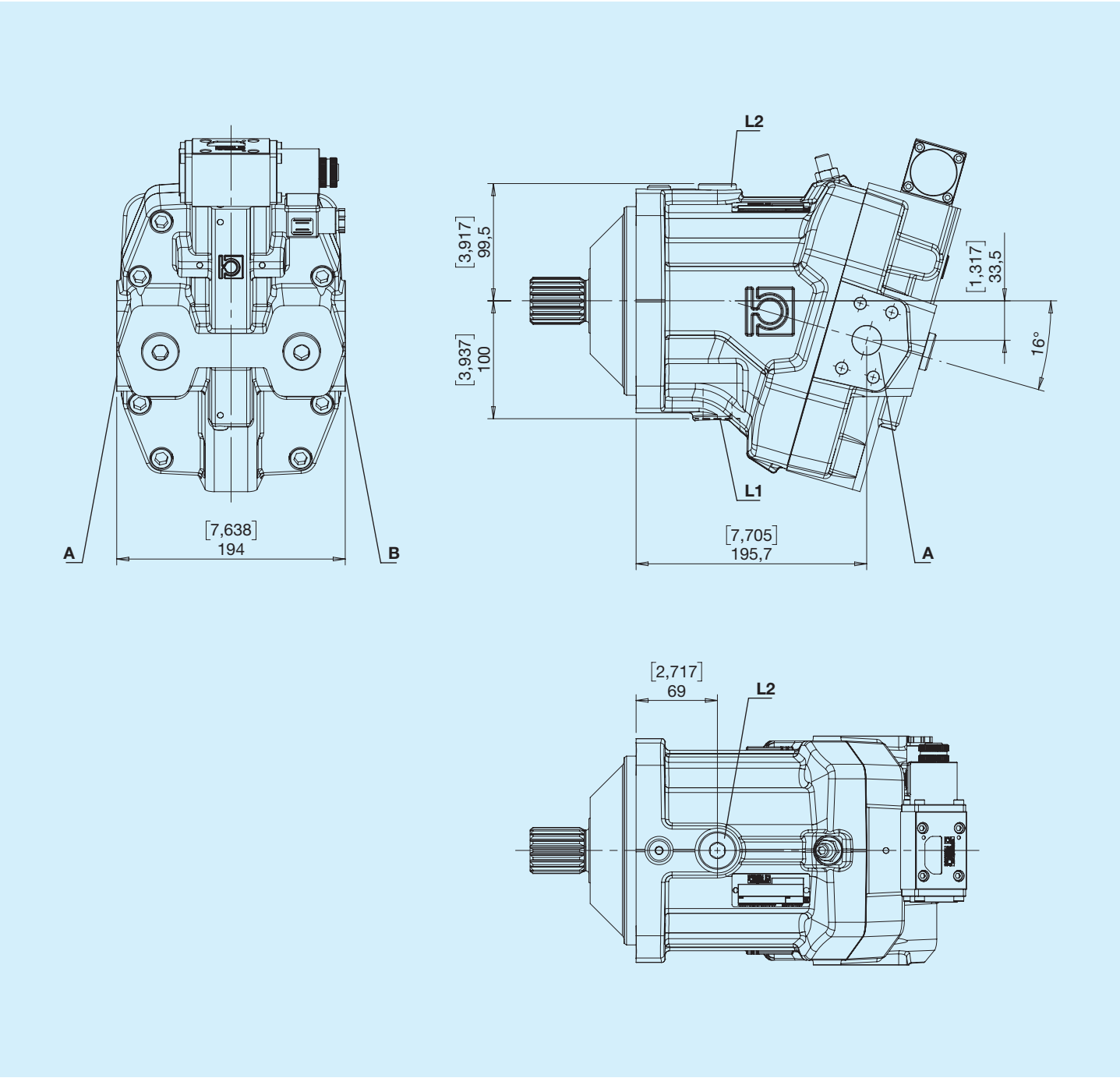

A,B - Use
L1, L2 - Drain port

Y Rear with rotated valve

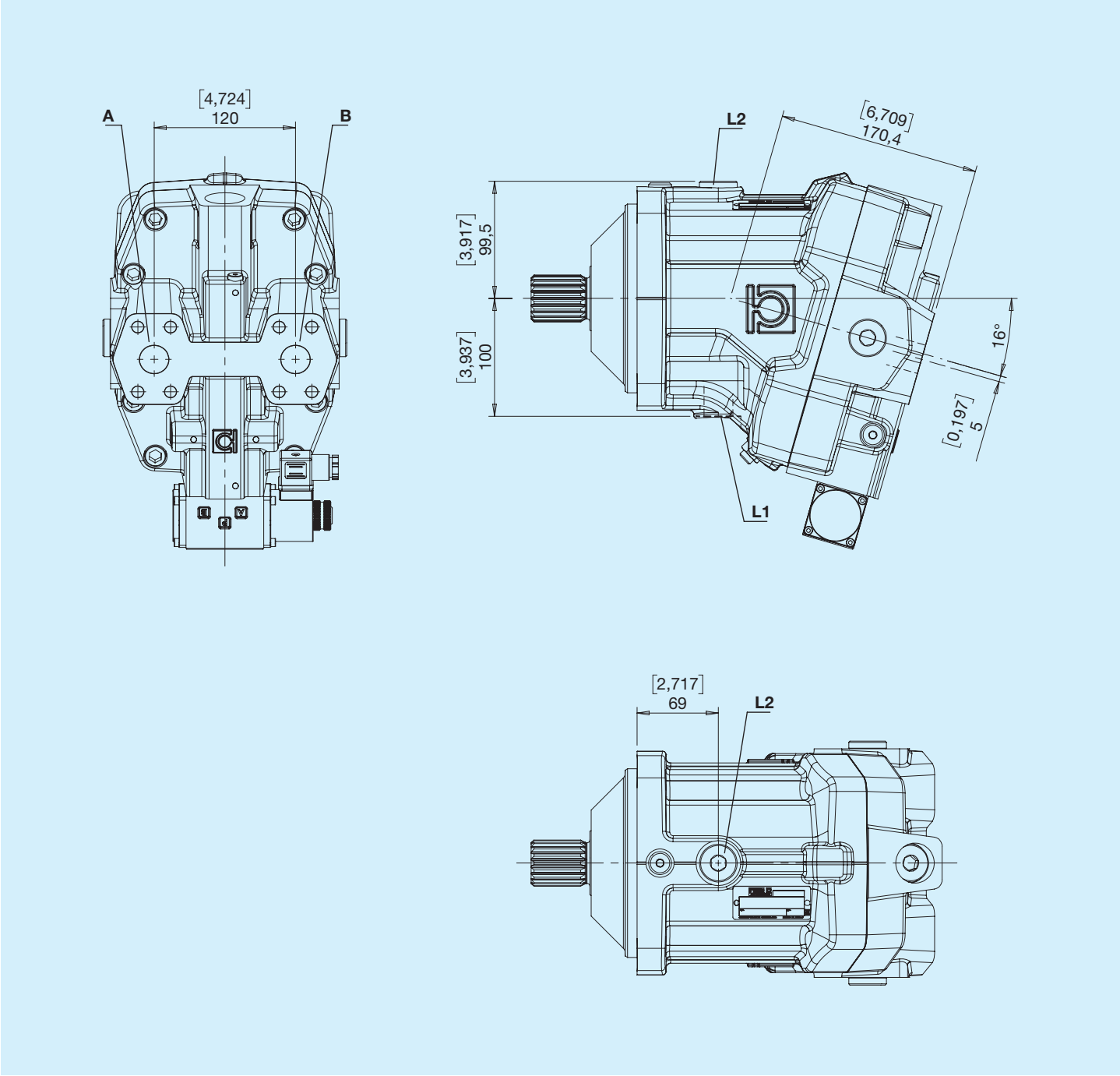

A,B - Use
L1, L2 - Drain port

J Opposite sideways with rotated valve

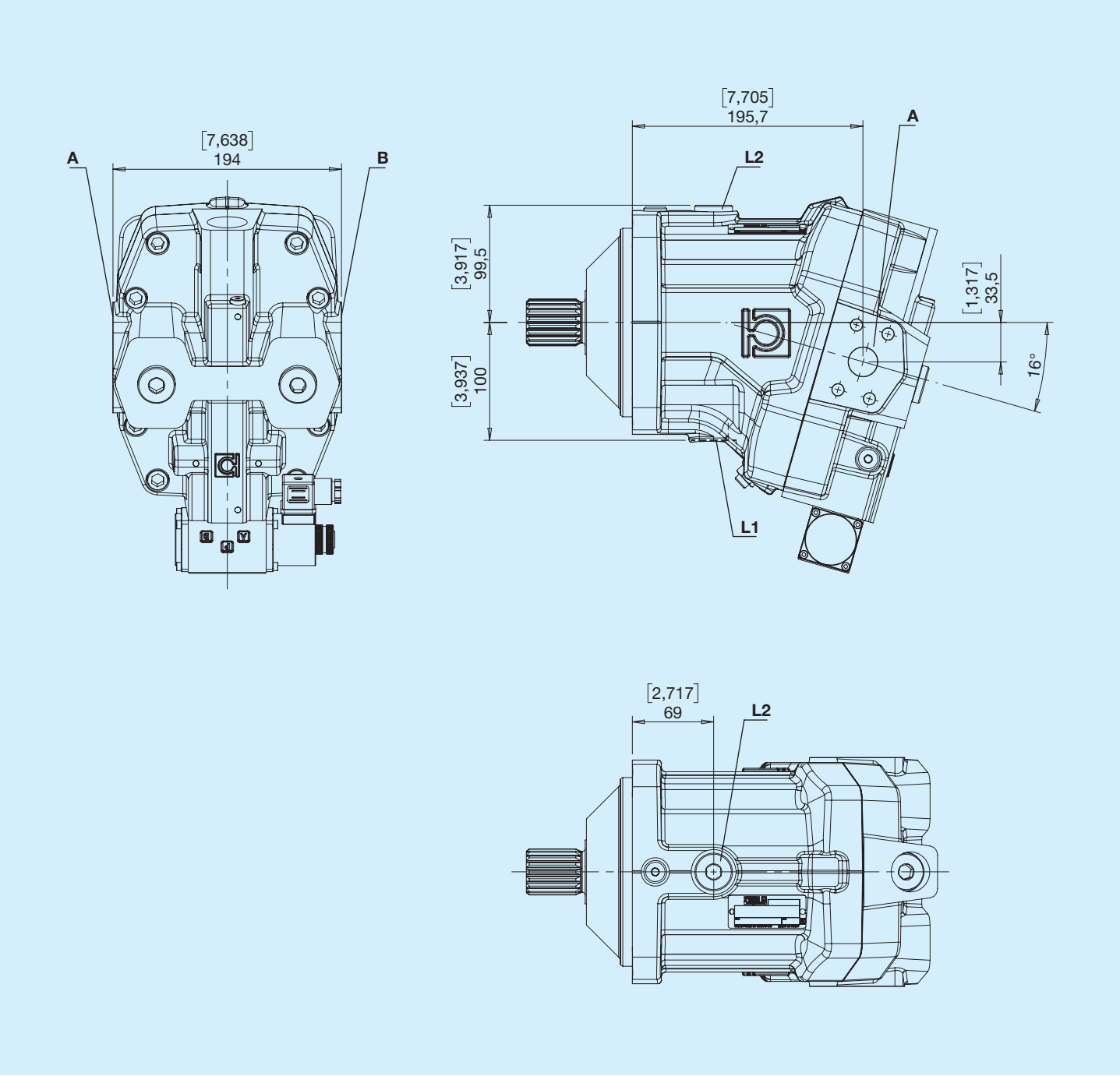

A,B - Use
L1, L2 - Drain port

A Hydraulic automatic, ON/OFF

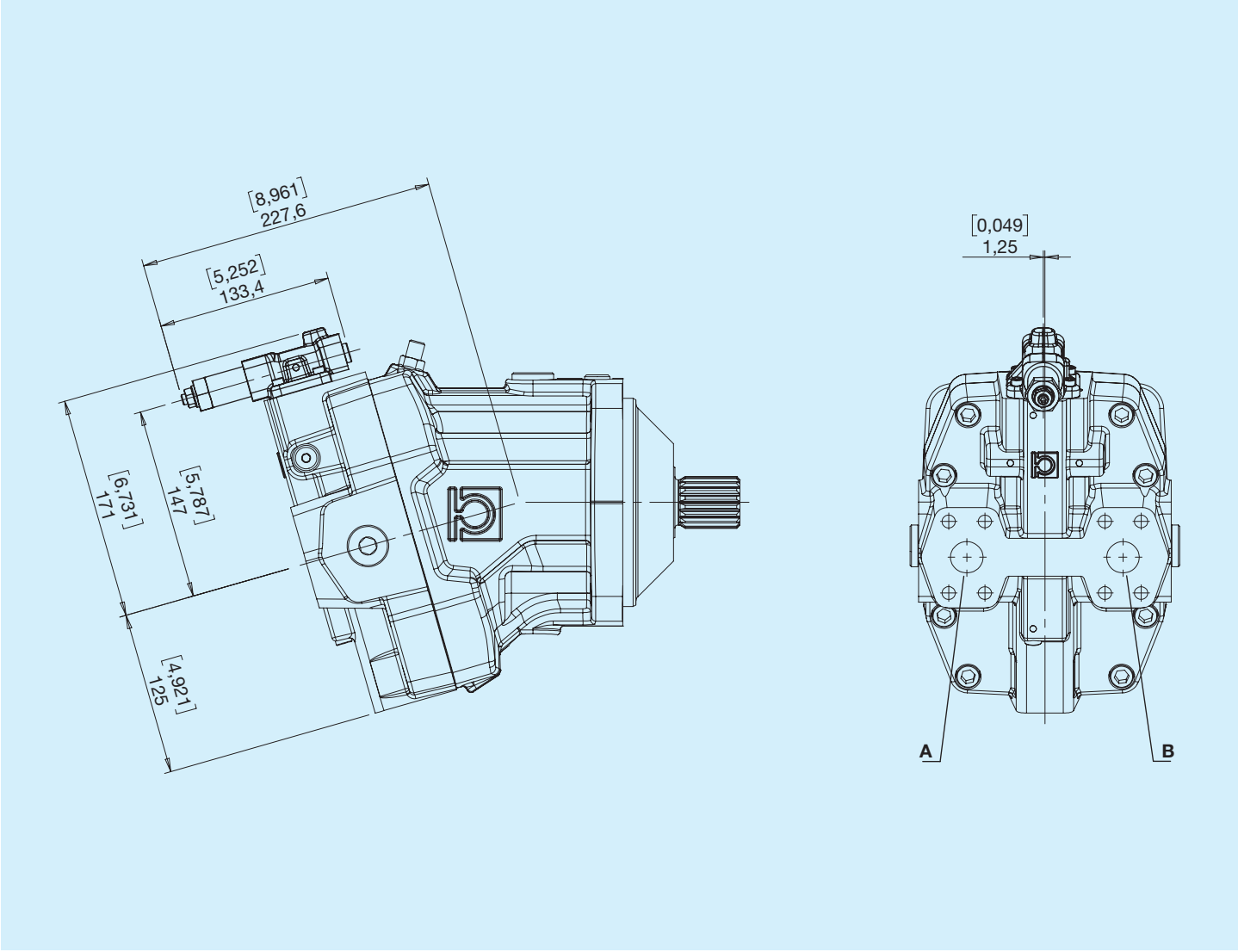

Inlet	Rotation
Right	Left
Right	Right

Pilot

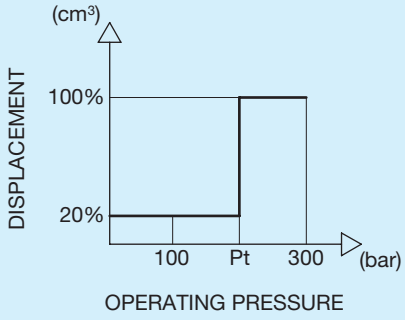

Pt - Calibration pressure (according to customer specifications)

Hydraulic diagram

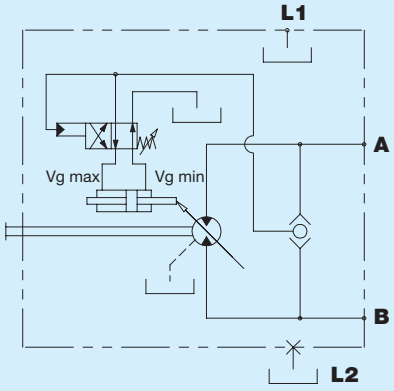

E Electric 2-position 12V

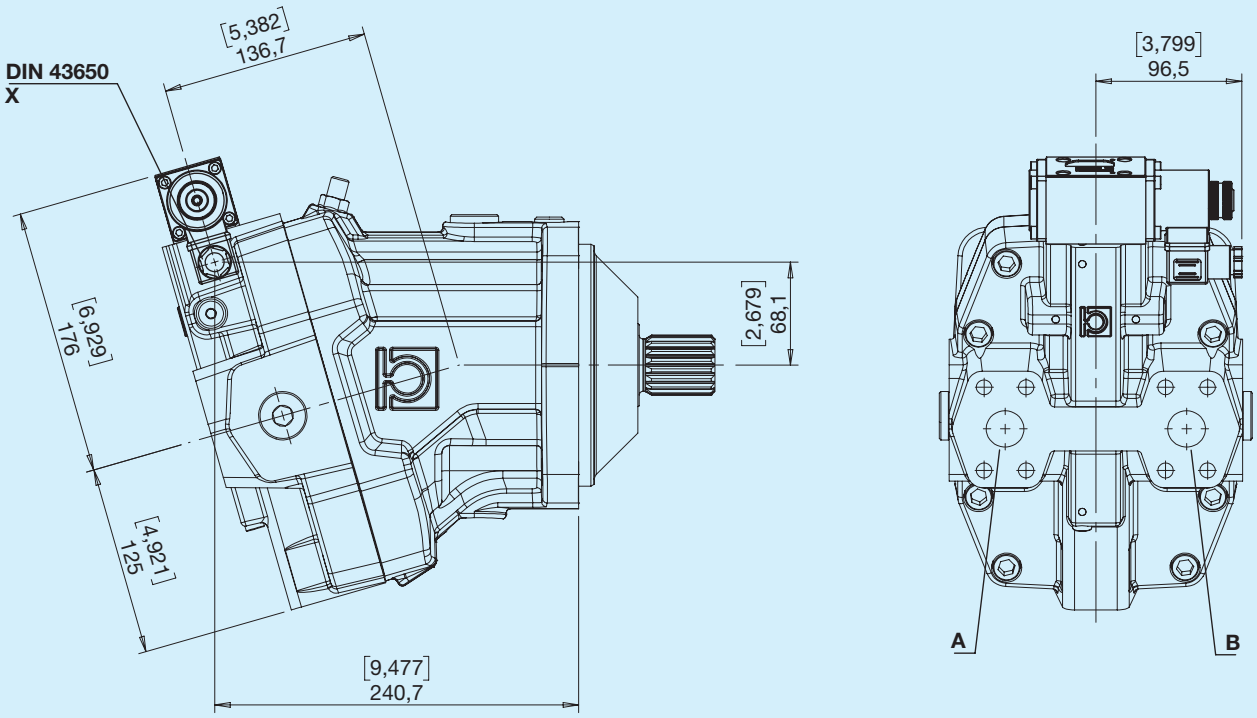

X - Solenoid valve available on request with DEUTSCH DT04-2P connectors

Inlet	Rotation
Right	Left
Right	Right

Hydraulic diagram

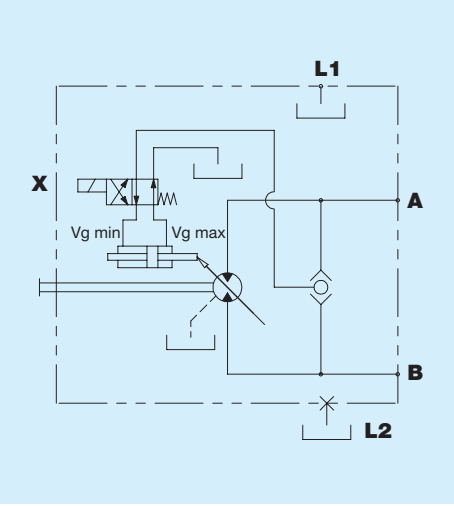

F Electric 2-position 24V

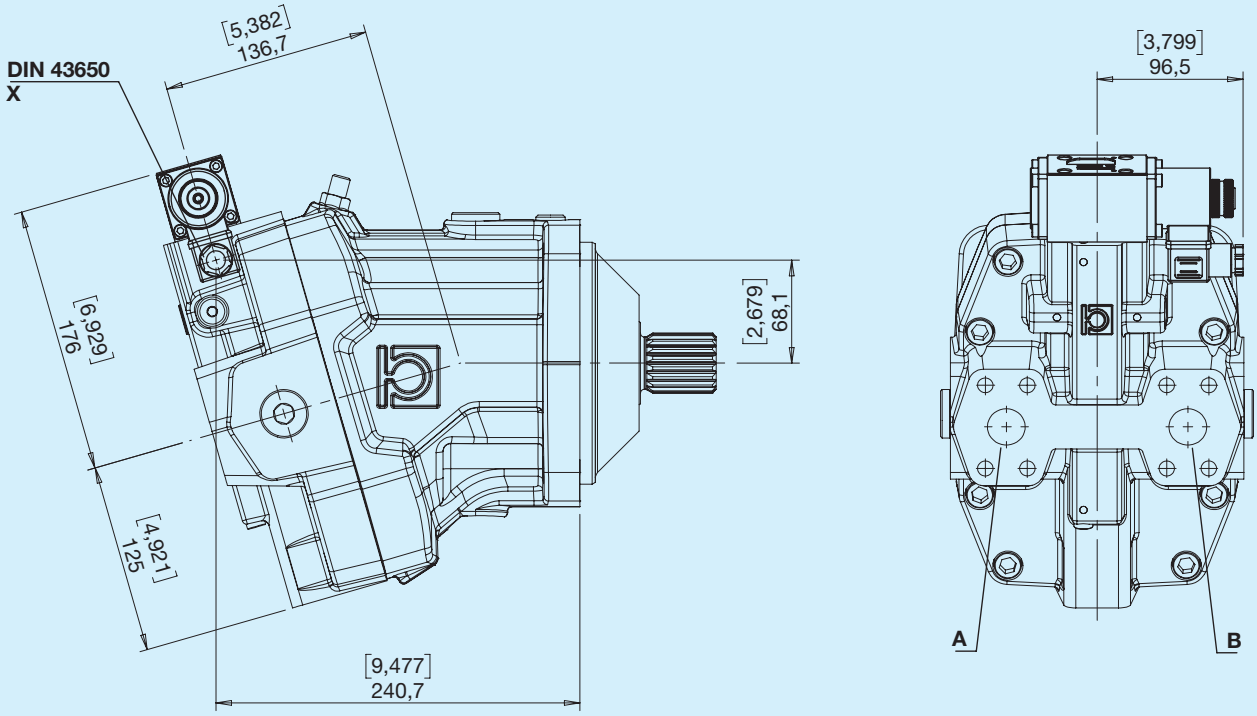

X - Solenoid valve available on request with DEUTSCH DT04-2P connectors

Inlet	Rotation
Right	Left
Right	Right

Hydraulic diagram

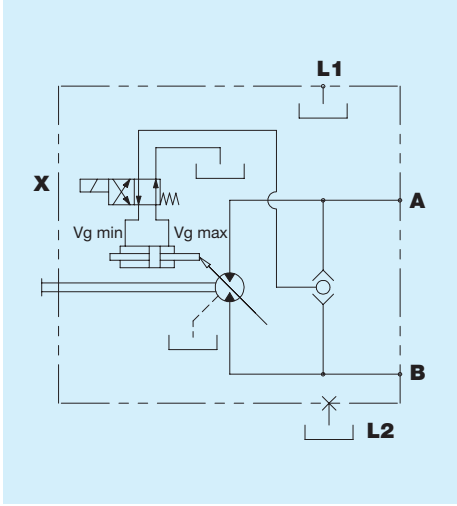

G Proportional hydraulic

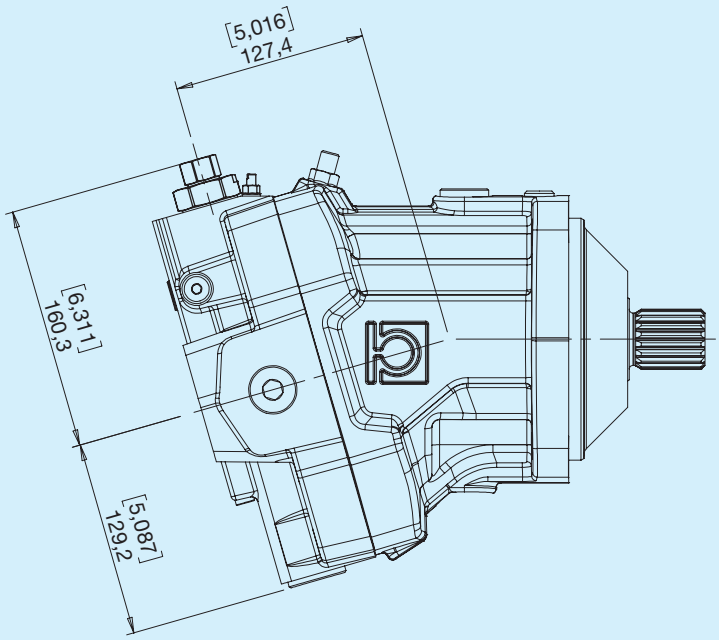

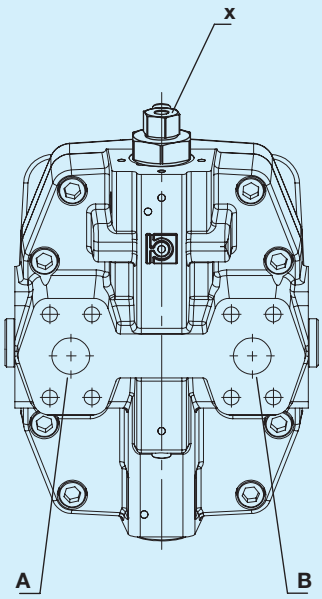

X - Pilot G1/8

Inlet	Rotation
Right	Left
Right	Right

Pilot

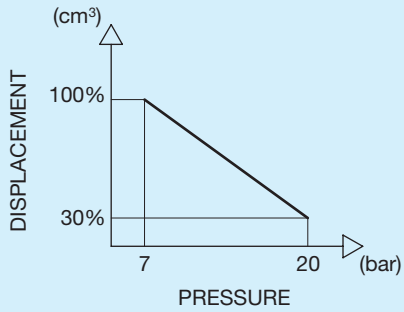

Hydraulic diagram

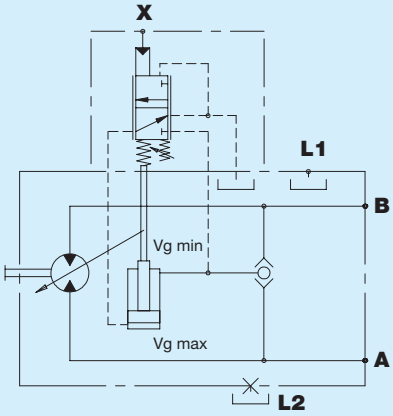

H Direct hydraulic, 2-position

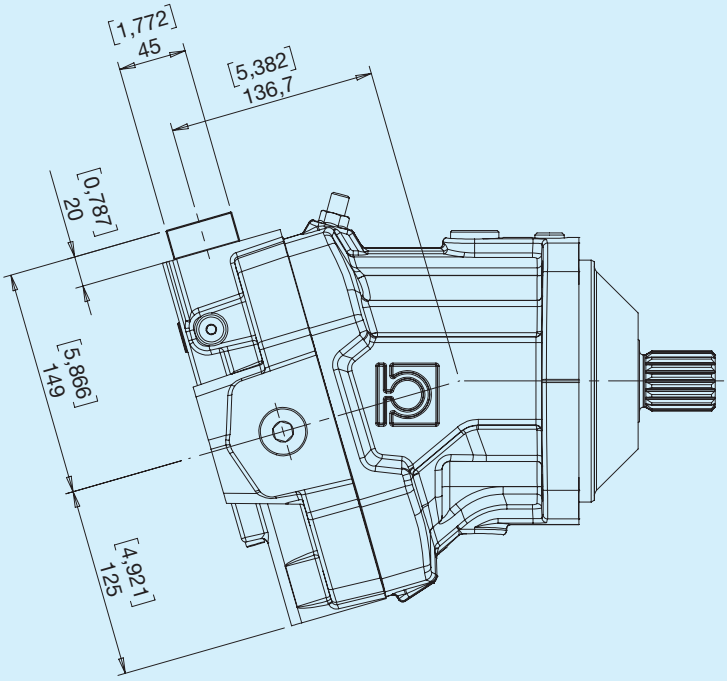

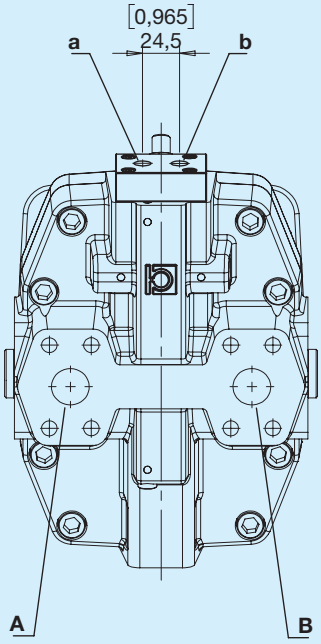

Inlet	Rotation
Right	Left
Right	Right

Pilot

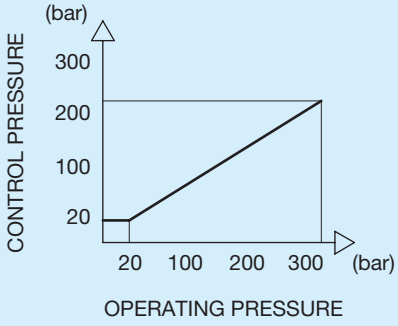

Hydraulic diagram

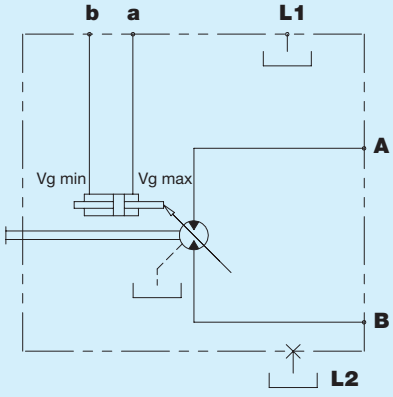

K Hydraulic, 2-position, low pressure

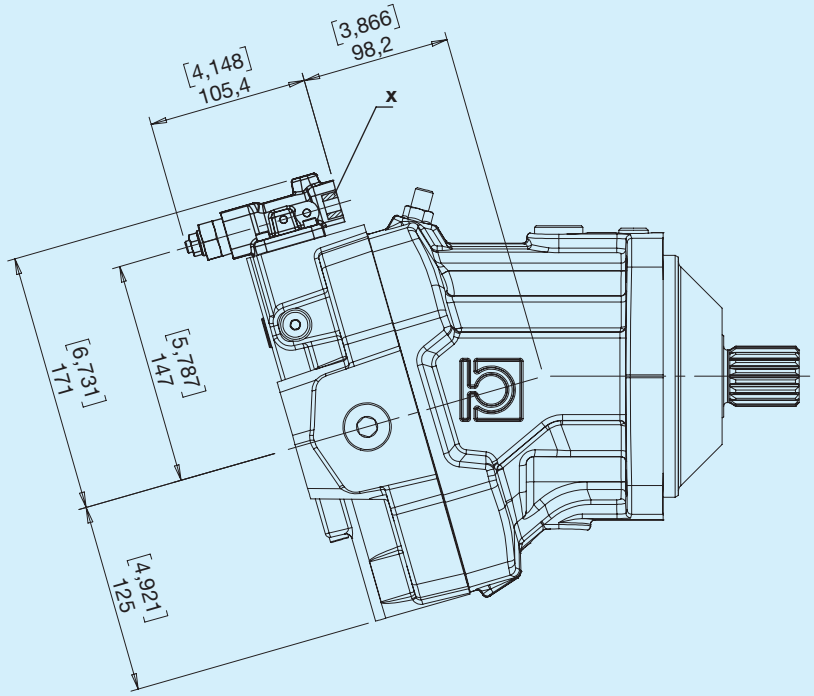

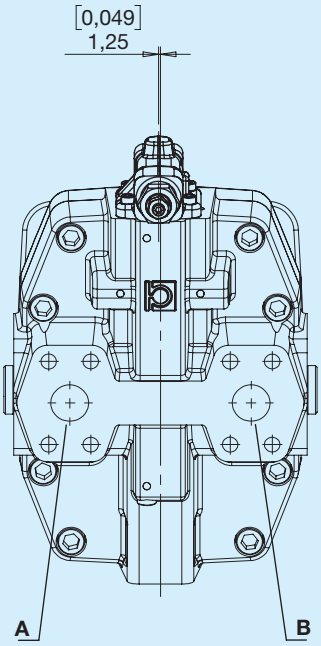

X - Pilot G1/8

Inlet	Rotation
Right	Left
Right	Right

Diagram

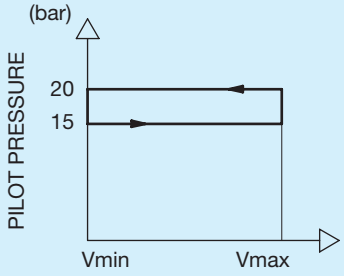

The motor is normally at maximum displacement. By applying external pressure to the pilot valve, the motor switches to minimum displacement. For correct displacement variation, observe the pilot pressure values shown in the diagram.

Hydraulic diagram

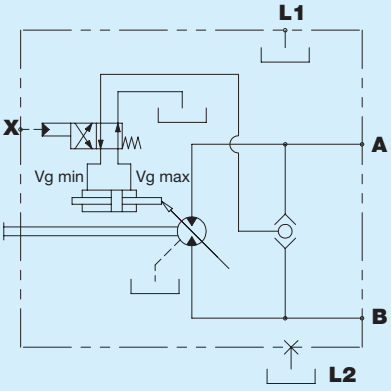

O Electronic proportional feedback control 12V

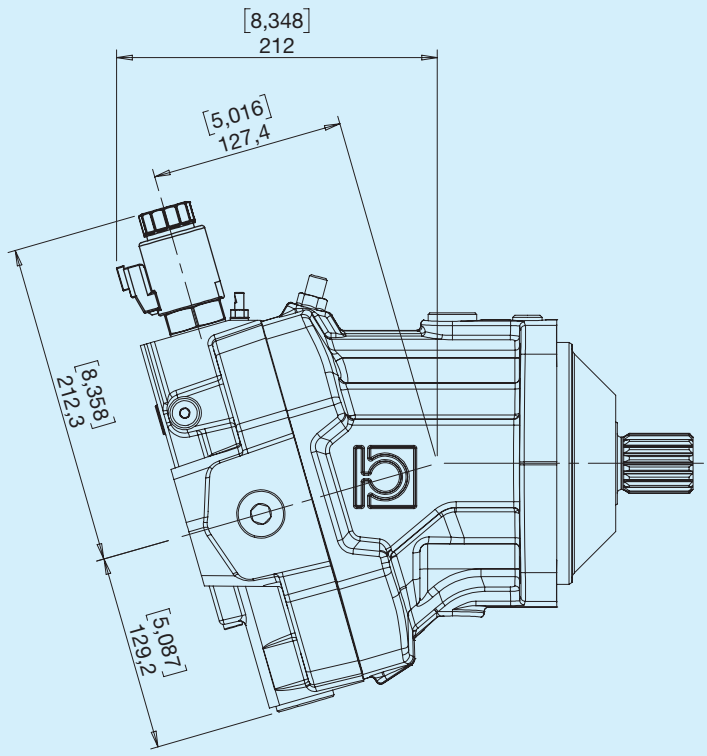

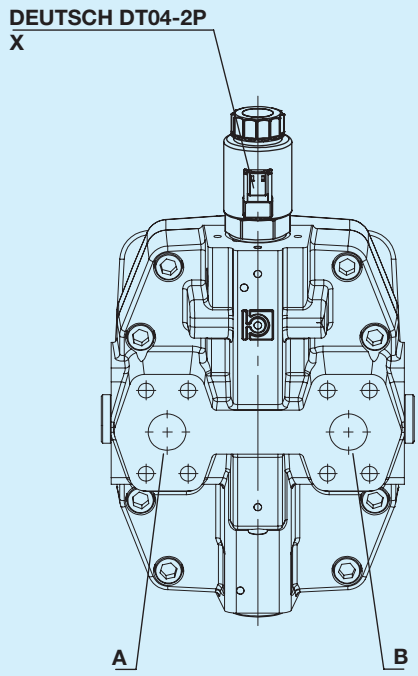

X - Solenoid valve

Inlet	Rotation
Right	Left
Right	Right

Pilot

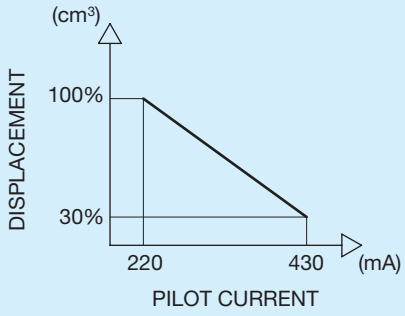

Hydraulic diagram

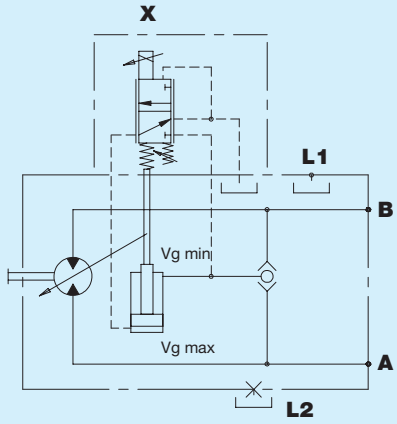

V Electronic proportional feedback control 24V

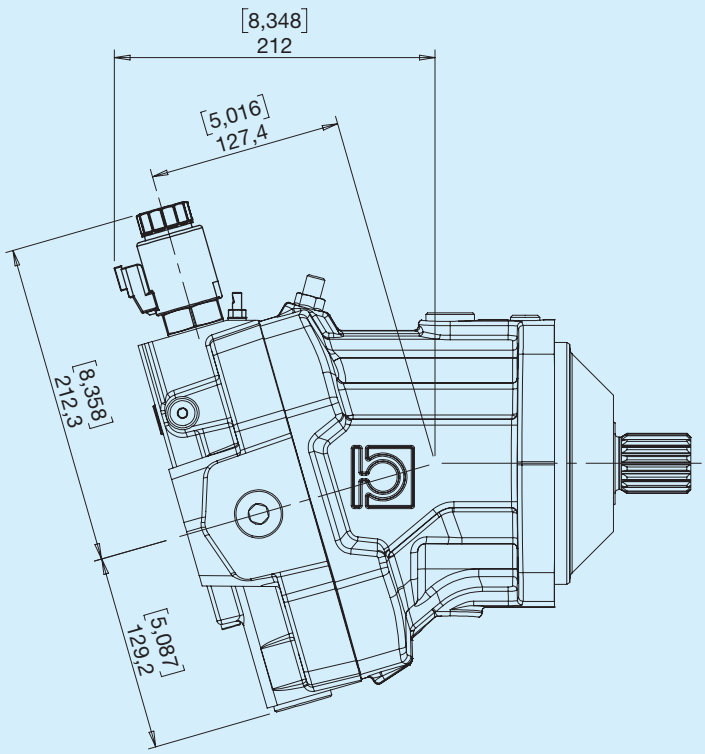

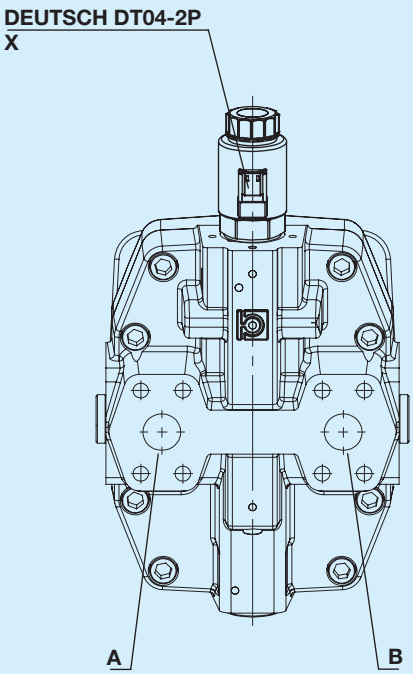

X - Solenoid valve

Inlet	Rotation
Right	Left
Right	Right

Pilot

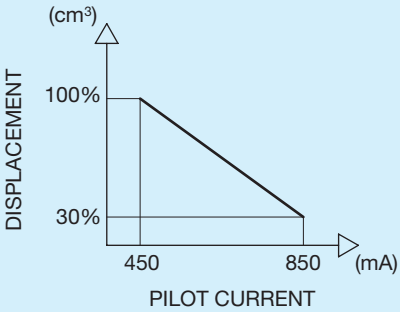

Hydraulic diagram

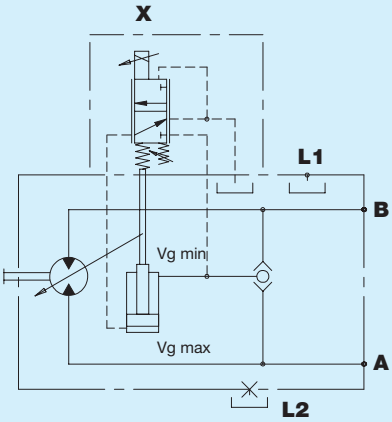

R Electric ON/OFF with pressure override and channel selector

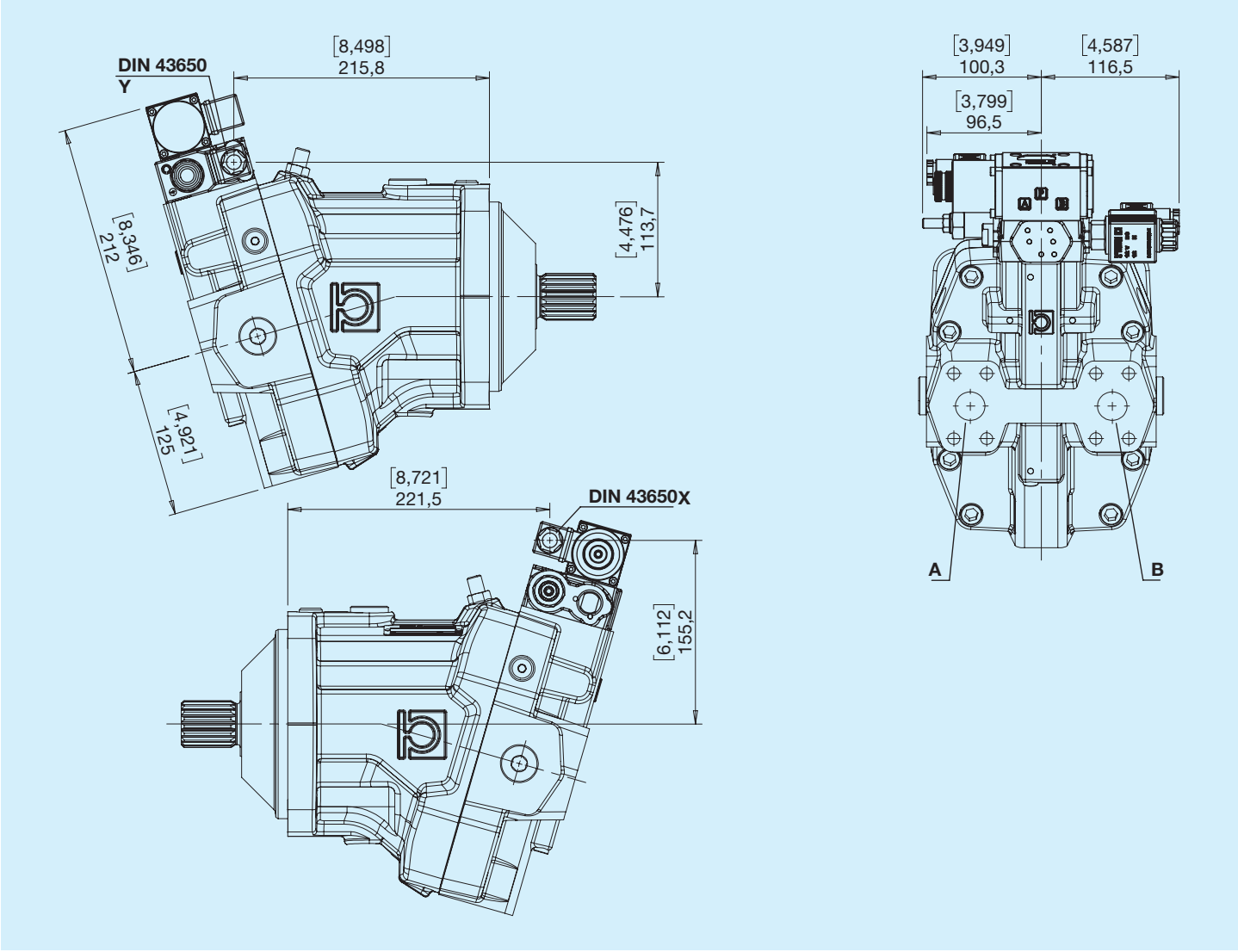

Inlet	Rotation
Right	Left
Right	Right

Hydraulic diagram

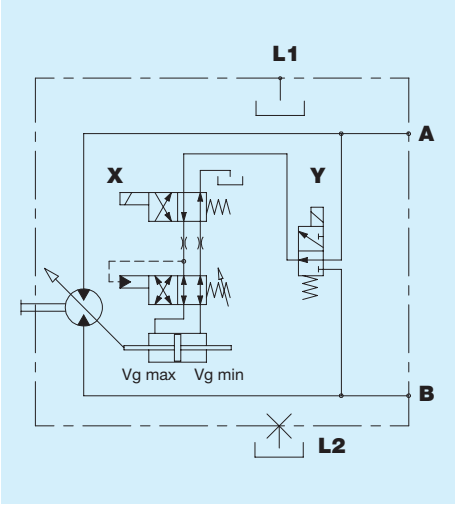

U Electric ON/OFF with pressure override

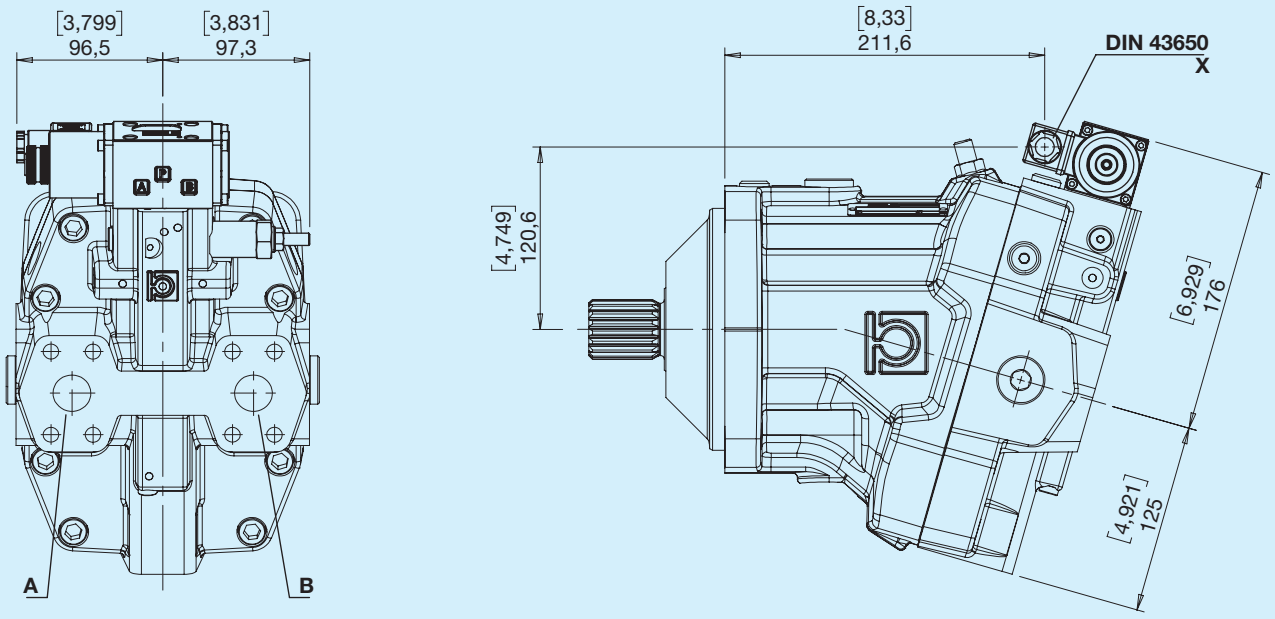

Inlet	Rotation
Right	Left
Right	Right

Hydraulic diagram

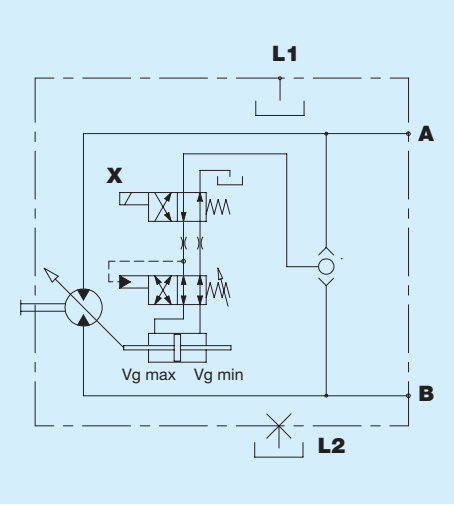

V Flushing valve (5-7 l/min)

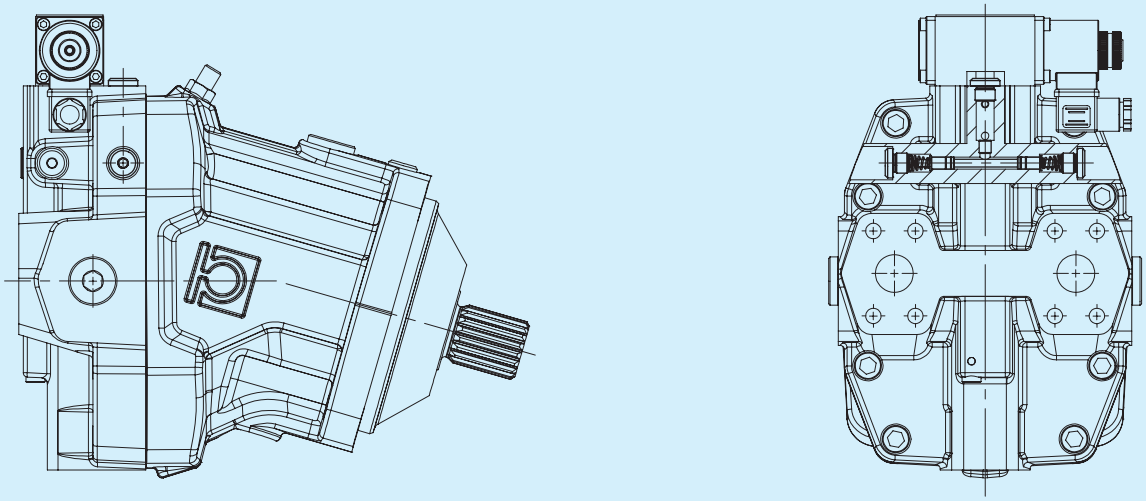

Hydraulic diagram

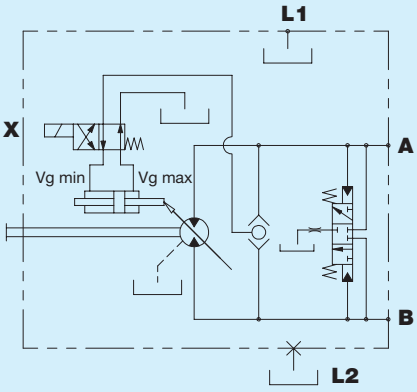

Instructions for ordering

HPBA 110-130	1	2	3	4	5	6	7	8	9	10	11	12	13	14

1 2 3 — Standard displacement

110	**130**

4 5 — Minimum displacement

...

6 — Flanges

I	ISO 4 holes standard	**P**	ISO 2 holes cartridge centring

7 — Shafts

B	DIN 5480 W40x2x30x18	**D**	DIN 5480 W45x2x30x21

8 — Type of ports

G	Gas	**U**	UNF	**N**	Gas-SAE inlet/outlet	**M**	UNF-SAE inlet/outlet

9 — Position of ports

P	Rear	**L**	Opposite sideways	**Y**	Rear with rotated valve (not available for O - V - G controls)	**J**	Opposite sideways with rotated valve (not available for O - V - G controls)

10 — Controls

A	Hydraulic automatic, ON/OFF	**G**	Proportional hydraulic	**O**	Electronic proportional feedback control 12V	**U**	Electric ON/OFF with pressure override
E	Electric 2-position 12V	**H**	Direct hydraulic, 2-position	**V**	Electronic proportional feedback control 24V		
F	Electric 2-position 24V	**K**	Hydraulic, 2-position, low pressure	**R**	Electric ON/OFF with pressure override and channel selector		

11 — Accessories

0	No option	**V**	Flushing valve	**V**	Flushing valve

12 13 14 — Special versions

...

Variable-displacement motors HPBA 160-200

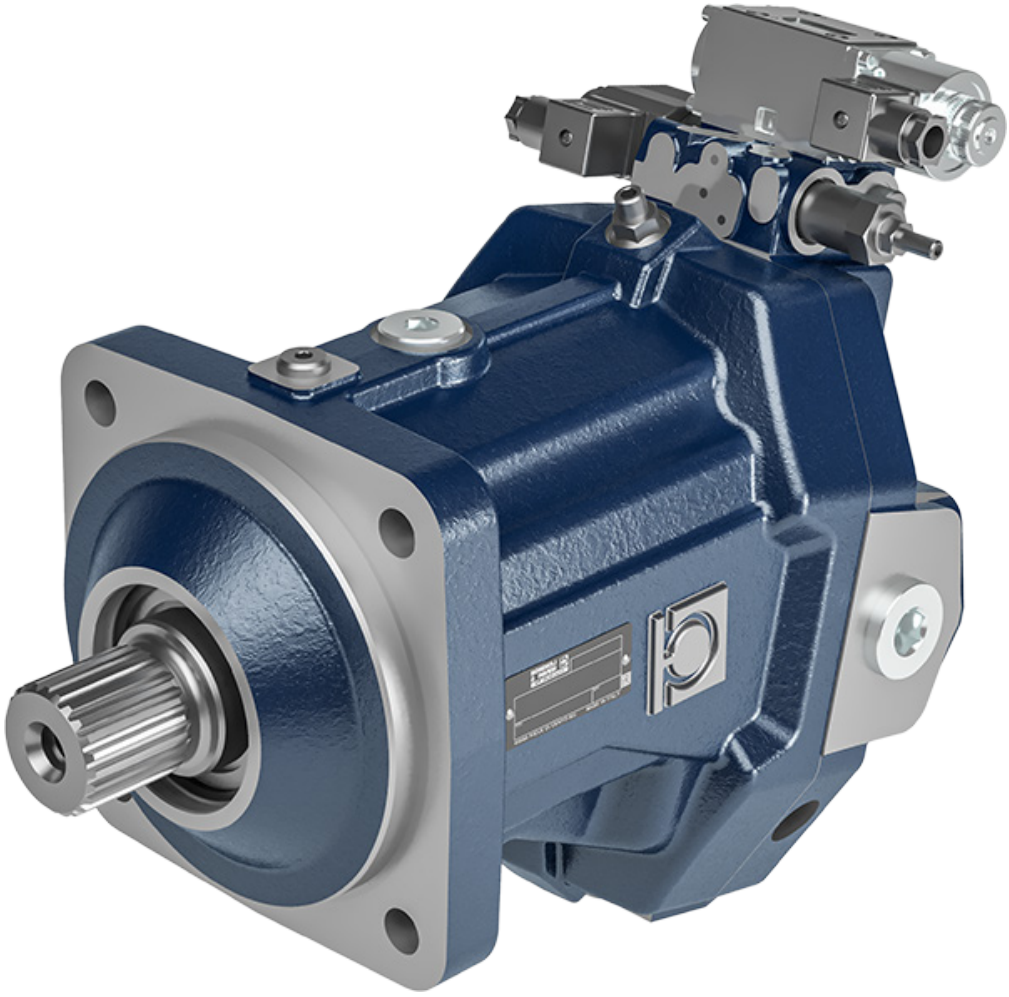

Before use, carefully read the GENERAL INSTRUCTIONS FOR USE OF CLOSED CIRCUIT AXIAL PISTON PUMPS AND MOTORS.

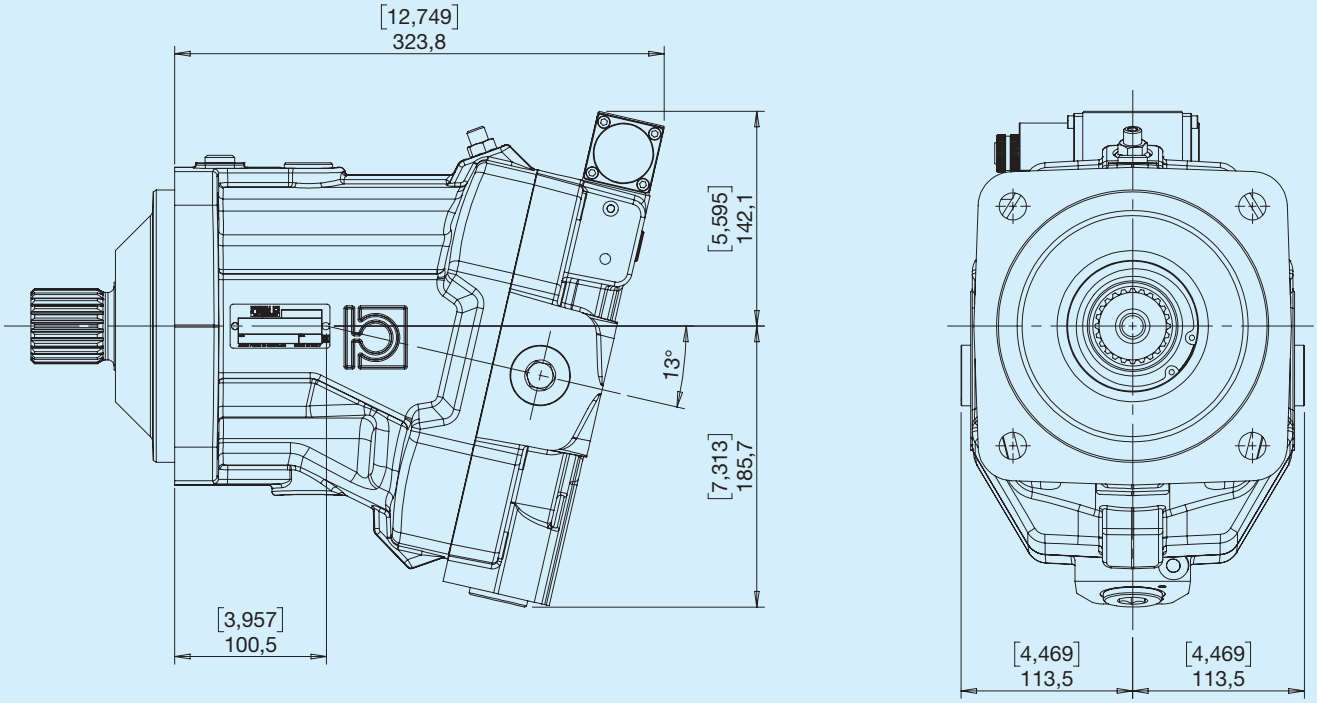

HPBA	Theoretical displacement		Swash plate	Continuous Pressure		Intermittent pressure		Peak pressure		Rotational speed			Weight	
	cm³	**in³**	**°**	**bar**	**psi**	**bar**	**psi**	**bar**	**psi**	**MAX (max V) min⁻¹**	**MAX (min V) min⁻¹**	**MIN min⁻¹**	**kg**	**lbs**
160	160	9.77	25	380	5510	400	5800	450	6525	3100	**4000**	500	80	176
200	200	12.20	25	350	5075	380	5510	420	6090	2800	**4000**	500	81.7	180

I ISO 4 holes standard

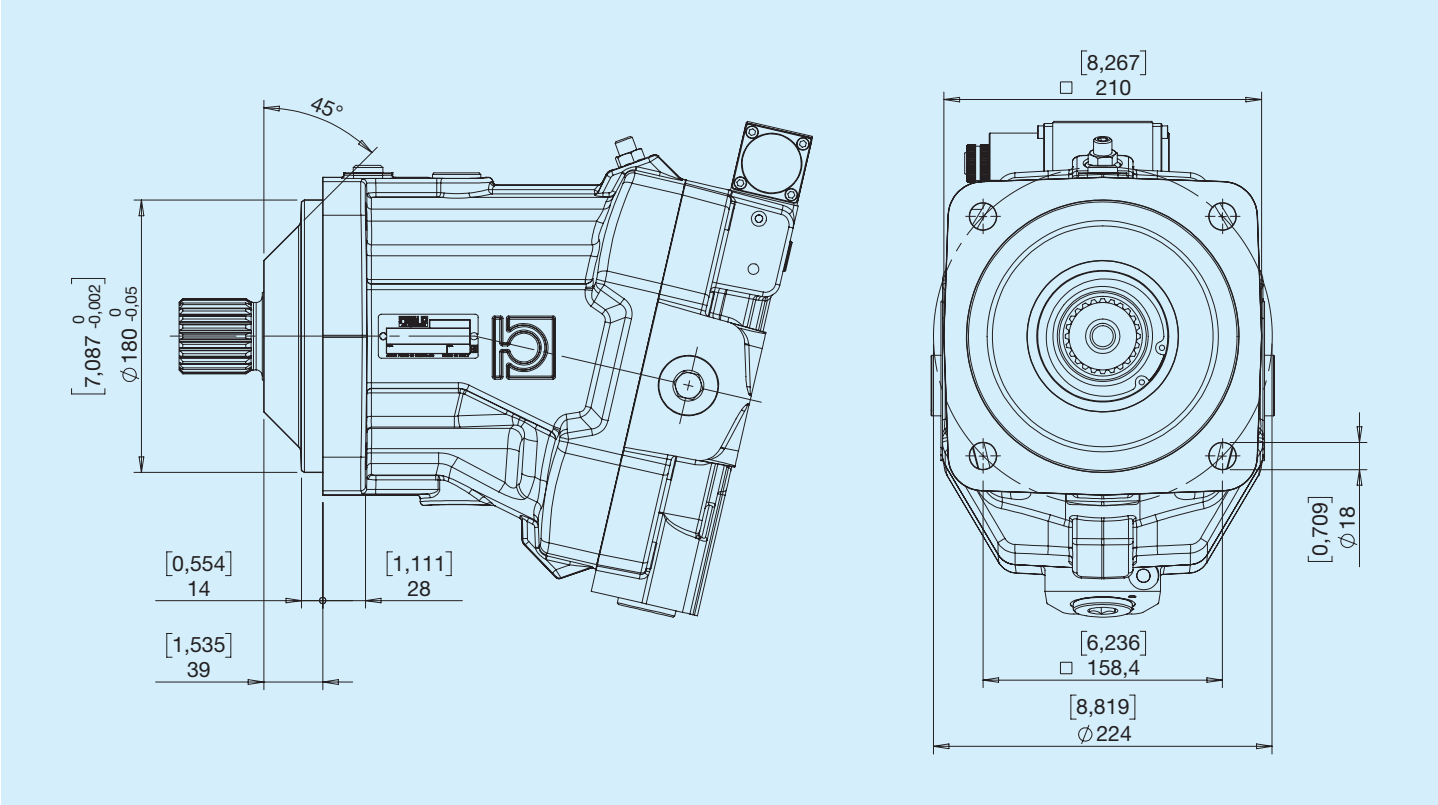

P ISO 2 holes cartridge centring

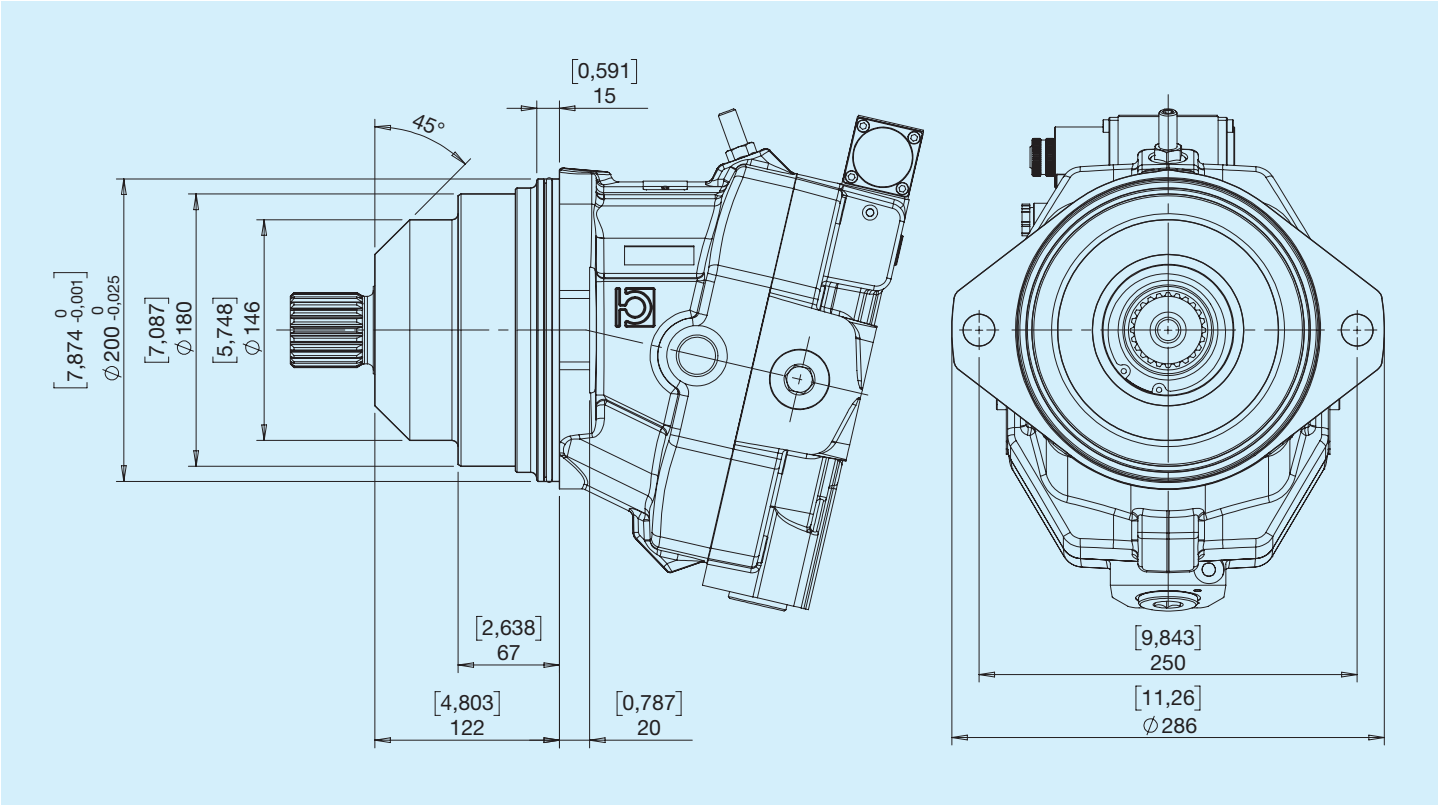

D DIN 5480 W45x2x30x21

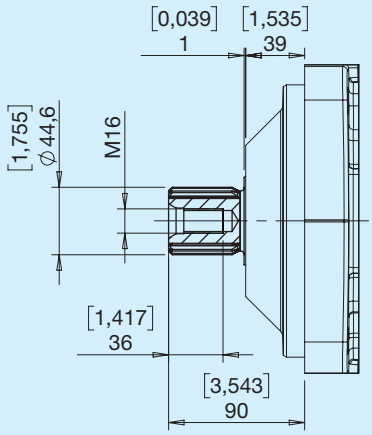

Max. torque 1980 Nm

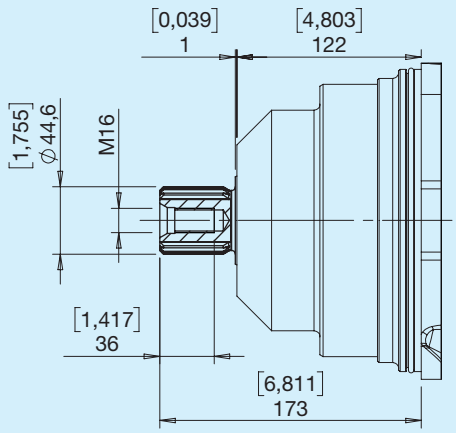

Max. torque 1980 Nm

E DIN 5480 W50x2x30x24

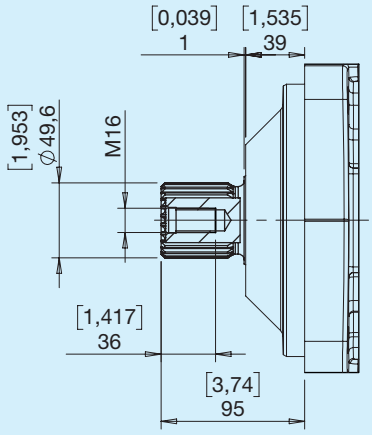

Max. torque 2860 Nm

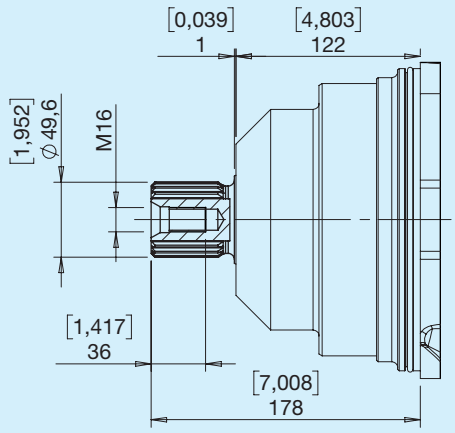

Max. torque 2860 Nm

Type G

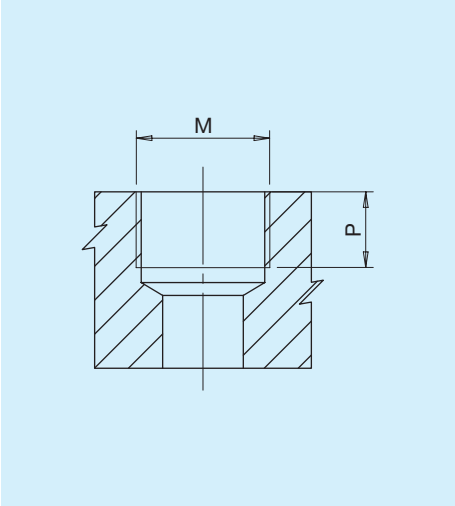

Type	M		P	
		Nm	**mm**	**in**
G2	Port ISO 1179-1 - G 1/4	17	8	0.31
G6	Port ISO 1179-1 - G 3/4	90	19	0.75
G7	Port ISO 1179-1 - G 1	160	19	0.75

Type U

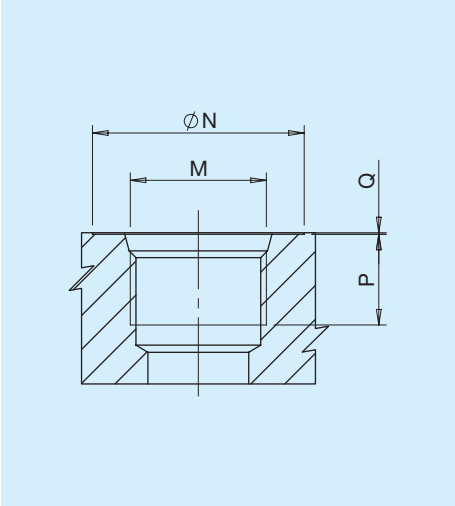

Type	Dim.	N		P		Q		M	
		mm	**in**	**mm**	**in**	**mm**	**in**		**Nm**
U2	1/4'	20	0.79	12	0.47	0.3	0.01	Port ISO 11926-1-7/16-20	17
U6	3/4'	41	1.61	20	0.79	0.3	0.01	Port ISO 11926-1-1 1/16-12	90
U7	1'	49	1.93	18	0.70	0.3	0.01	Port ISO 11926-1-1 5/16-12	160

Type N

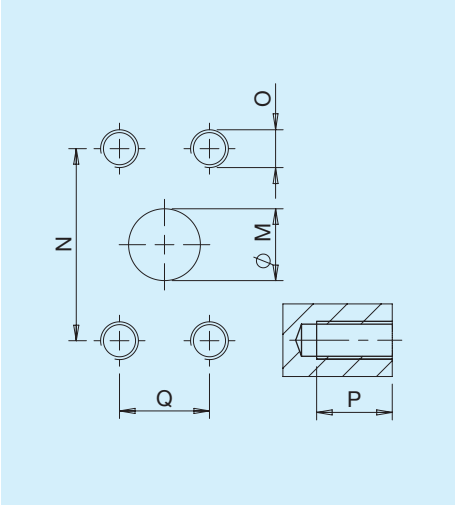

Type	M		N		Q		P		O	
	mm	**in**	**mm**	**in**	**mm**	**in**	**mm**	**in**		**Nm**
N8	32	1.26	66.7	2.62	31.8	1.25	20	0.79	M12	70

Combinations

Type	Inlet/outlet **A-B**	Drain port **L1-L2**	Pilot **a-b-x**
G	G6	G6	G6
U	U6	U6	U6
N	N8	G6	G2
M	N8	U6	U2

P Rear

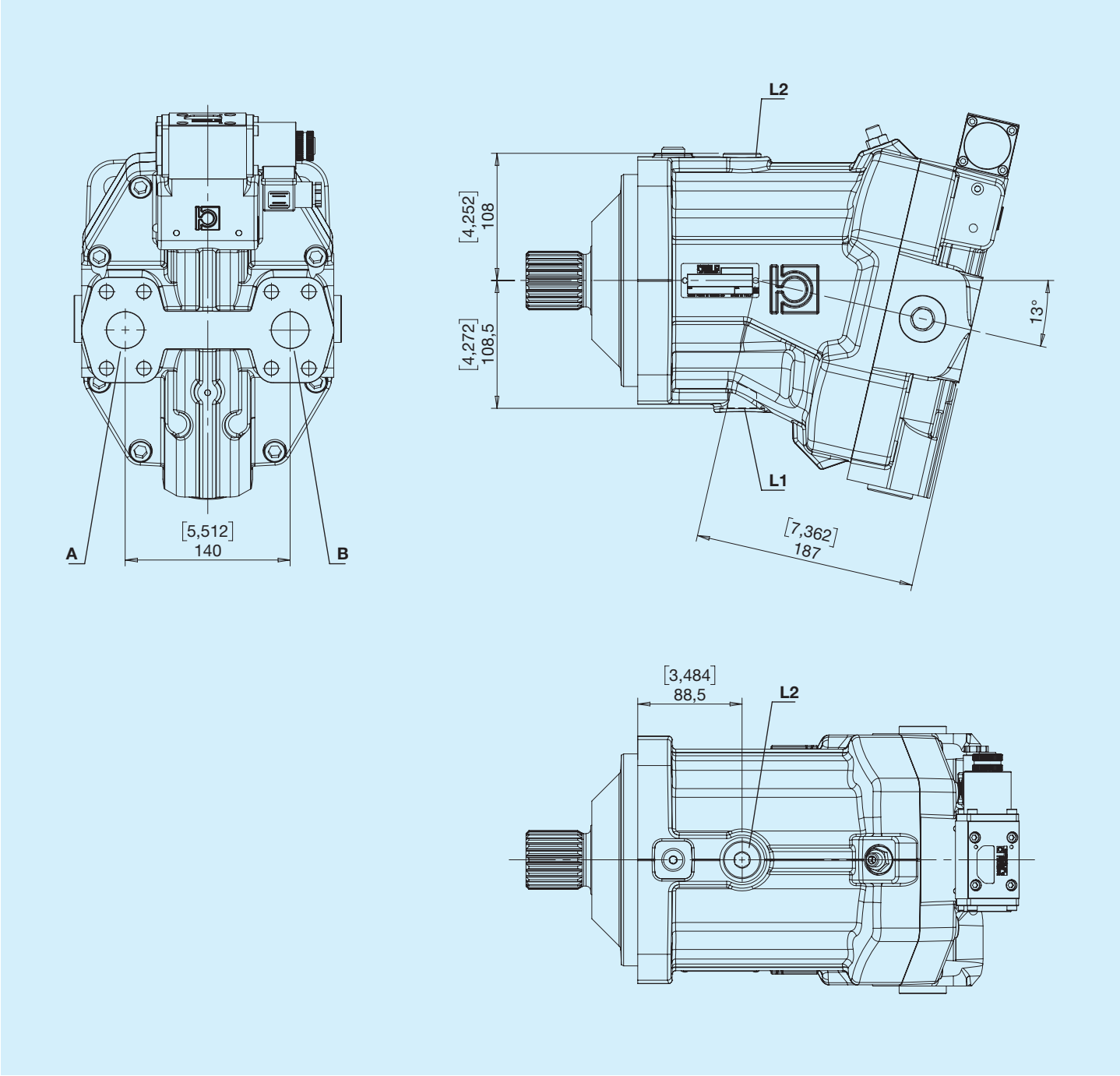

A,B - Use
L1, L2 - Drain port

L Opposite sideways

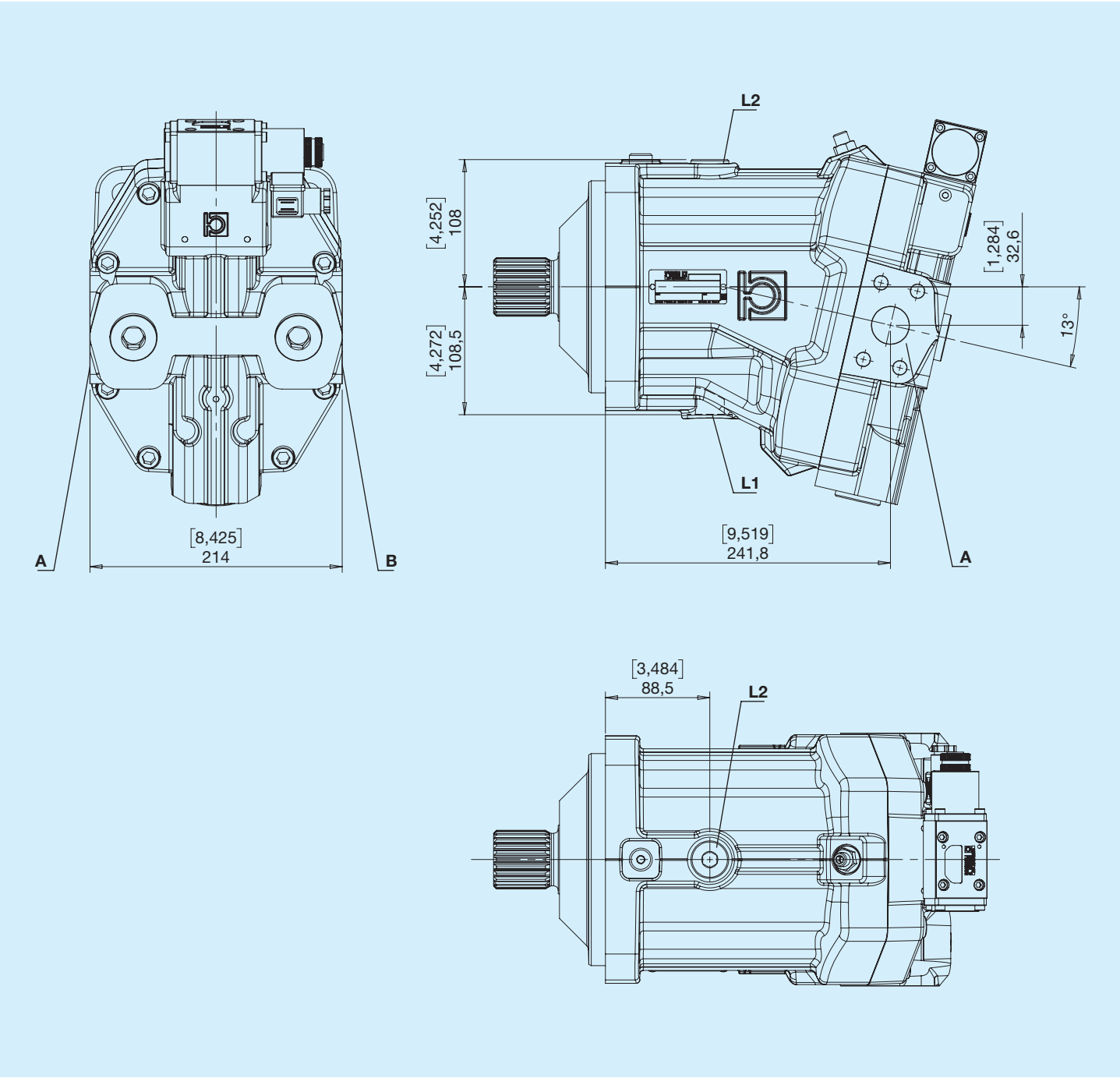

A,B - Use
L1, L2 - Drain port

Y Rear with rotated valve

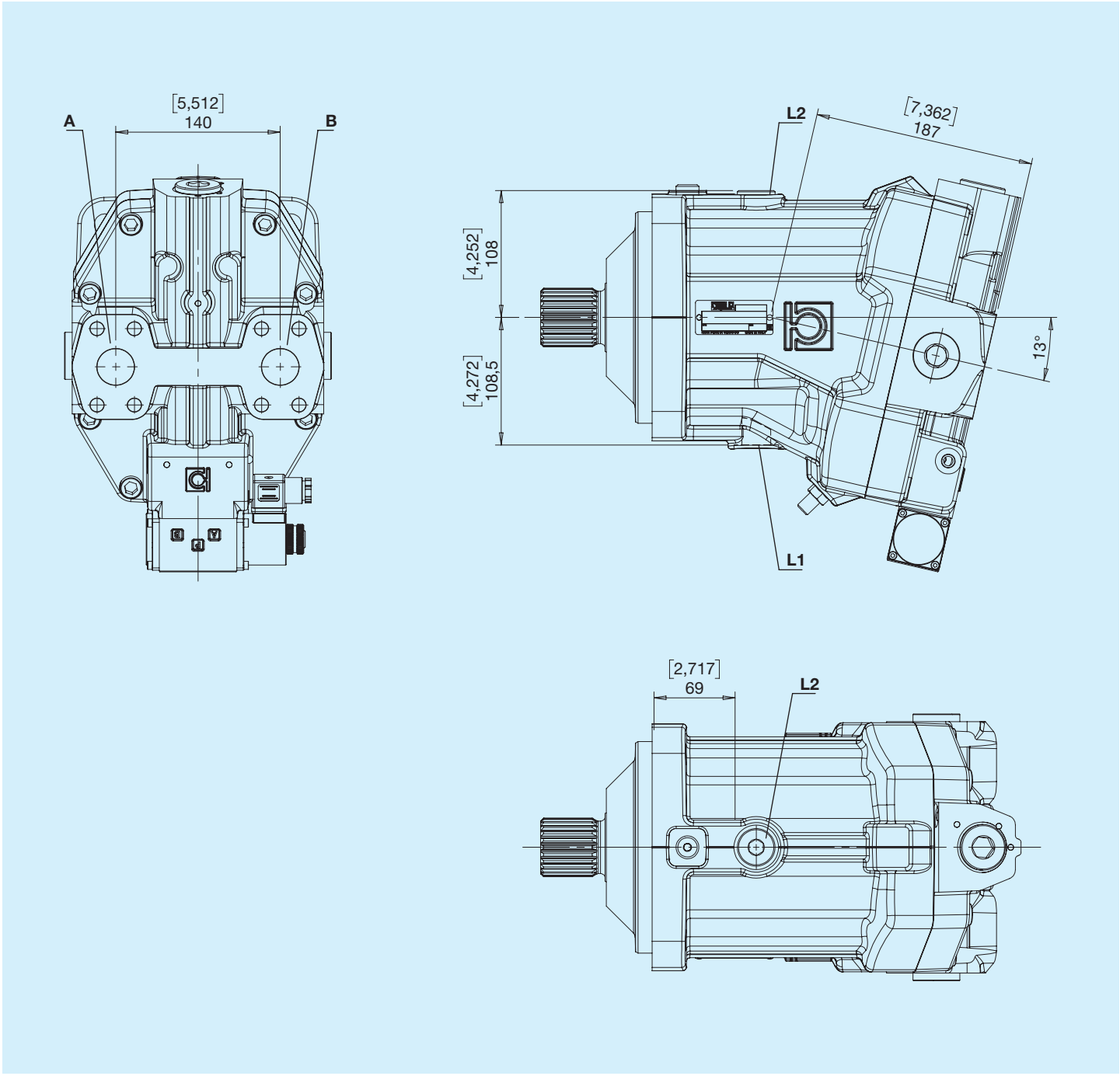

A,B - Use
L1, L2 - Drain port

J Opposite sideways with rotated valve

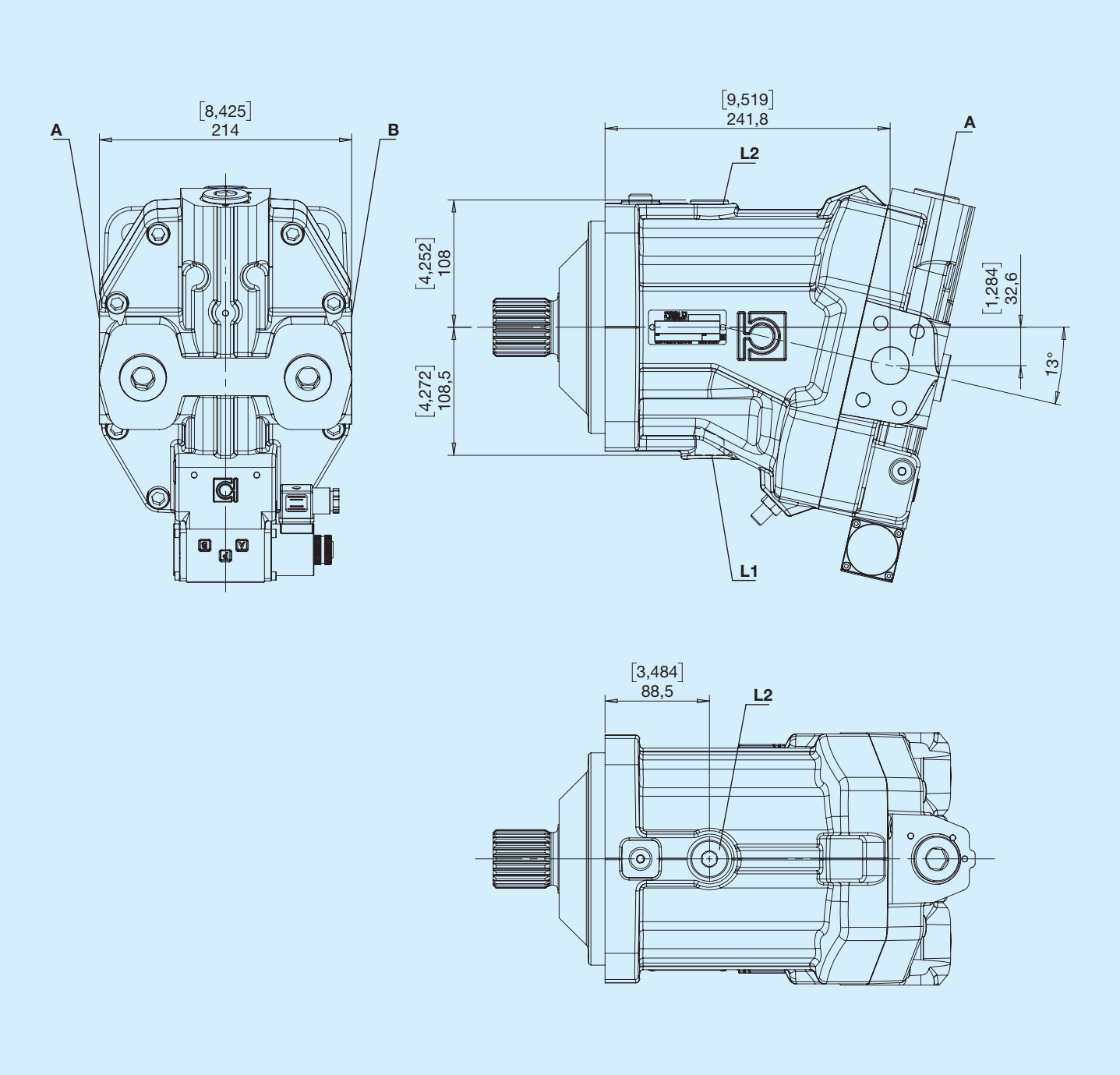

A,B - Use
L1, L2 - Drain port

A Hydraulic automatic, ON/OFF

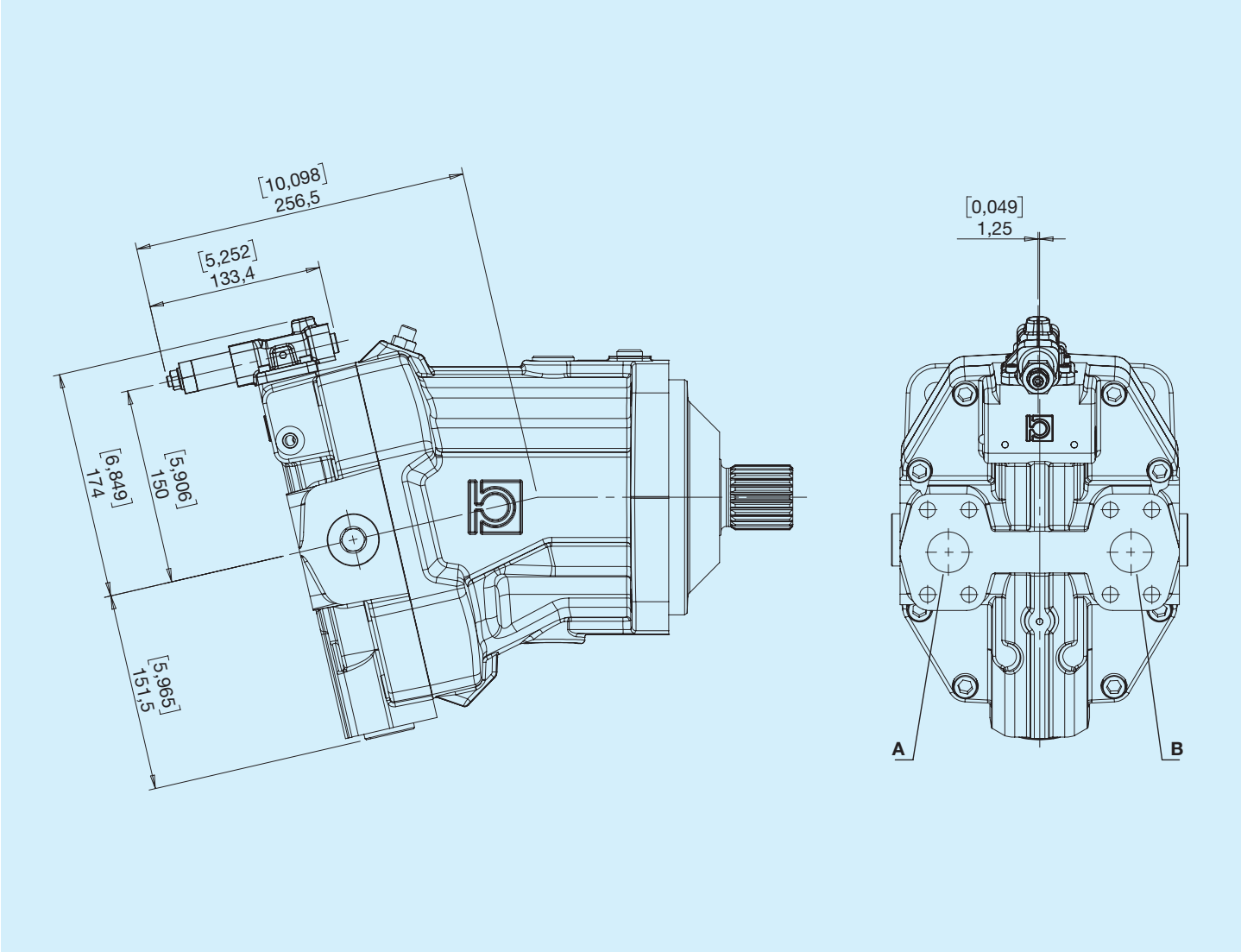

Inlet	Rotation
Right	Left
Right	Right

Pilot

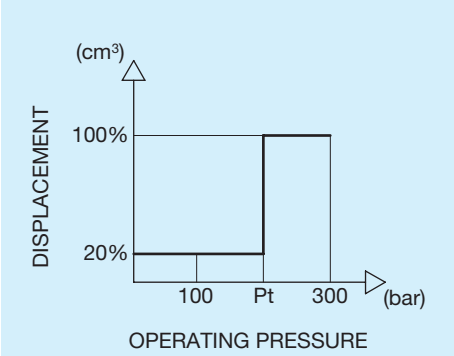

Pt - Calibration pressure (according to customer specifications)

Hydraulic diagram

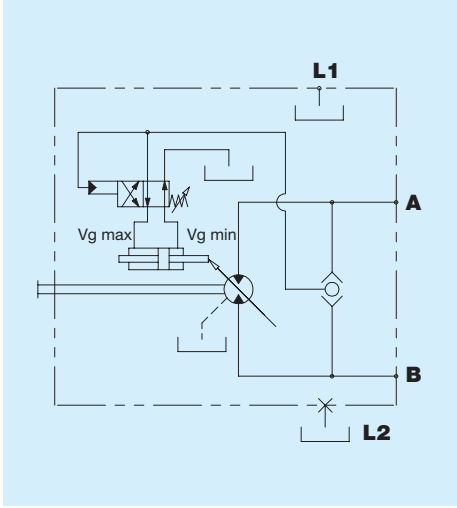

E Electric 2-position 12V

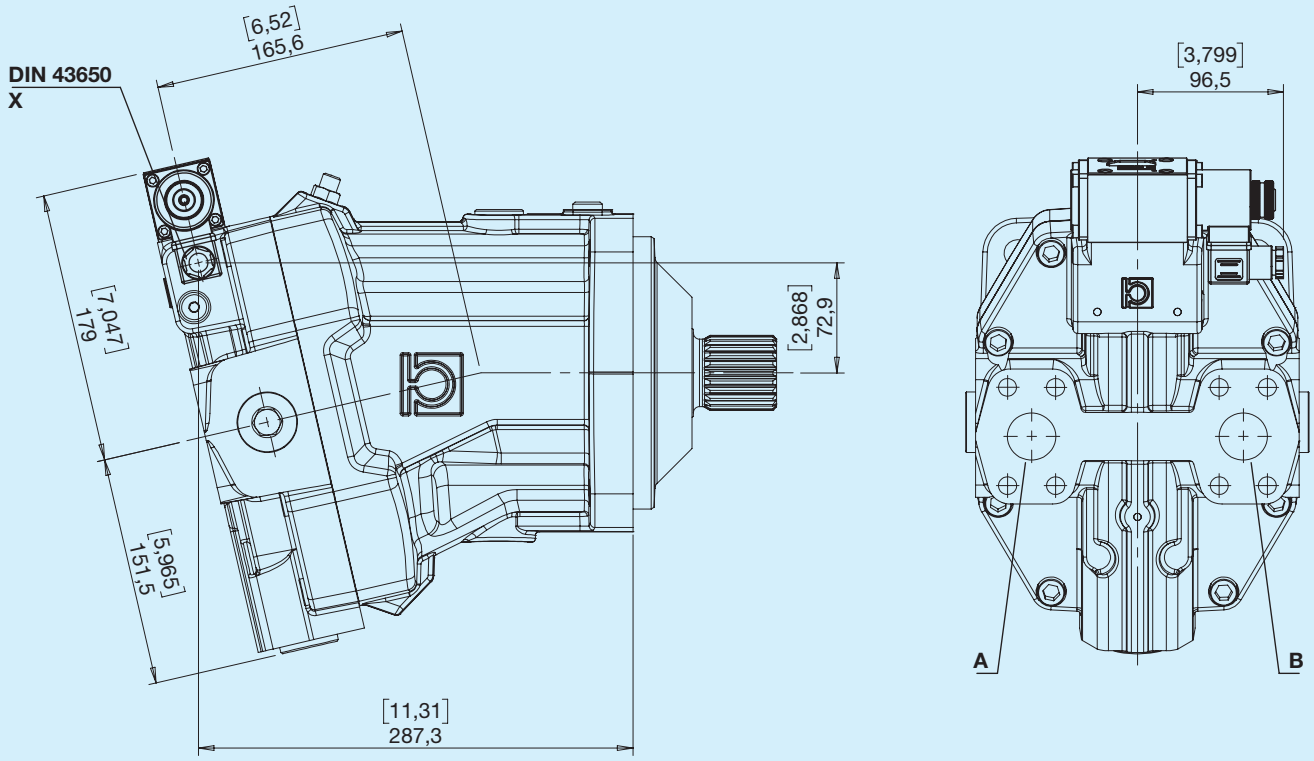

X - Solenoid valve available on request with DEUTSCH DT04-2P connectors

Inlet	Rotation
Right	Left
Right	Right

Hydraulic diagram

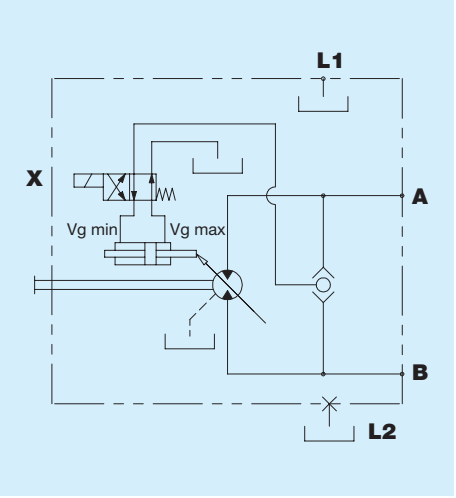

F Electric 2-position 24V

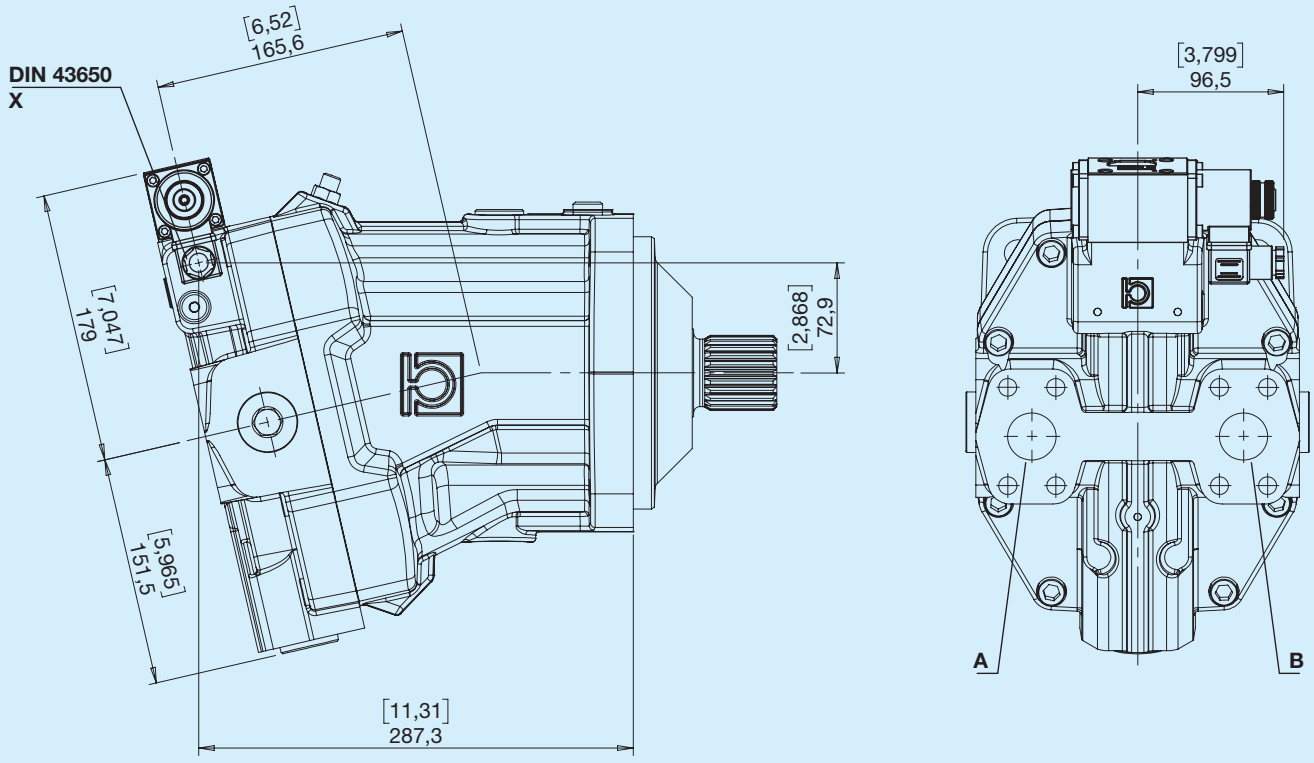

X - Solenoid valve available on request with DEUTSCH DT04-2P connectors

Inlet	Rotation
Right	Left
Right	Right

Hydraulic diagram

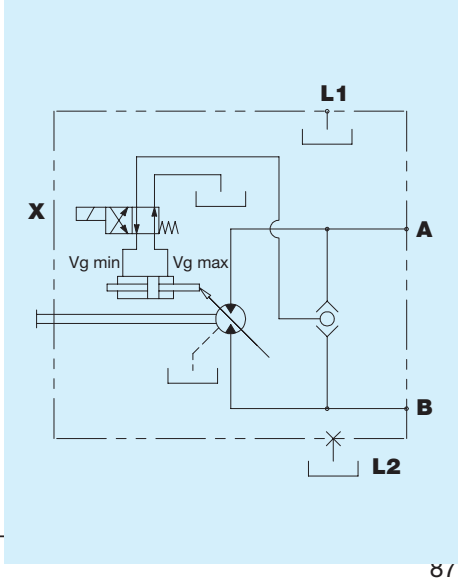

G Proportional hydraulic

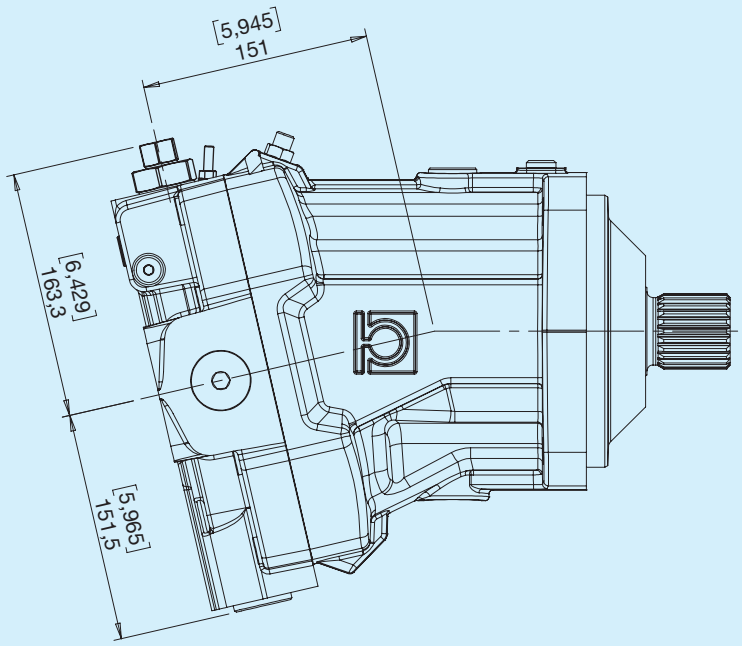

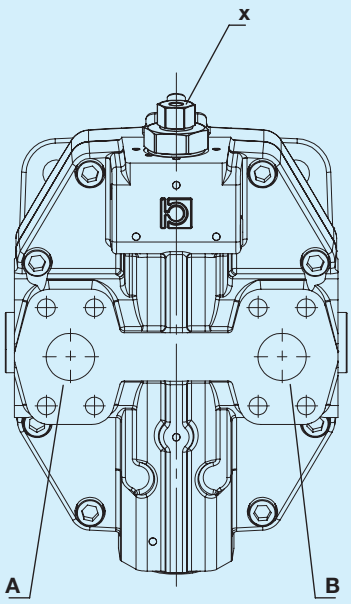

X - Pilot G1/8

Inlet	Rotation
Right	Left
Right	Right

Pilot

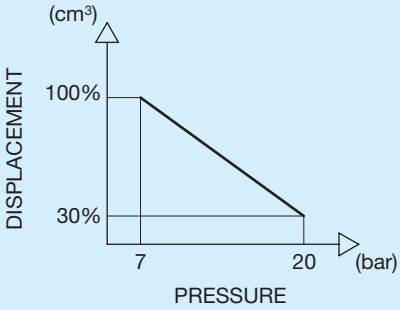

Hydraulic diagram

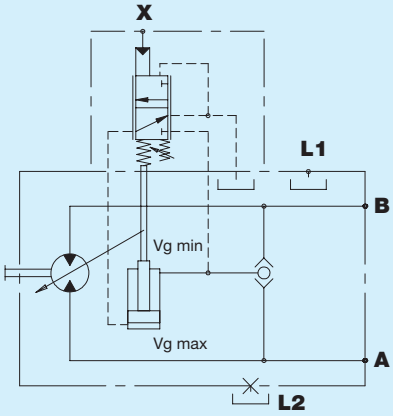

H Direct hydraulic, 2-position

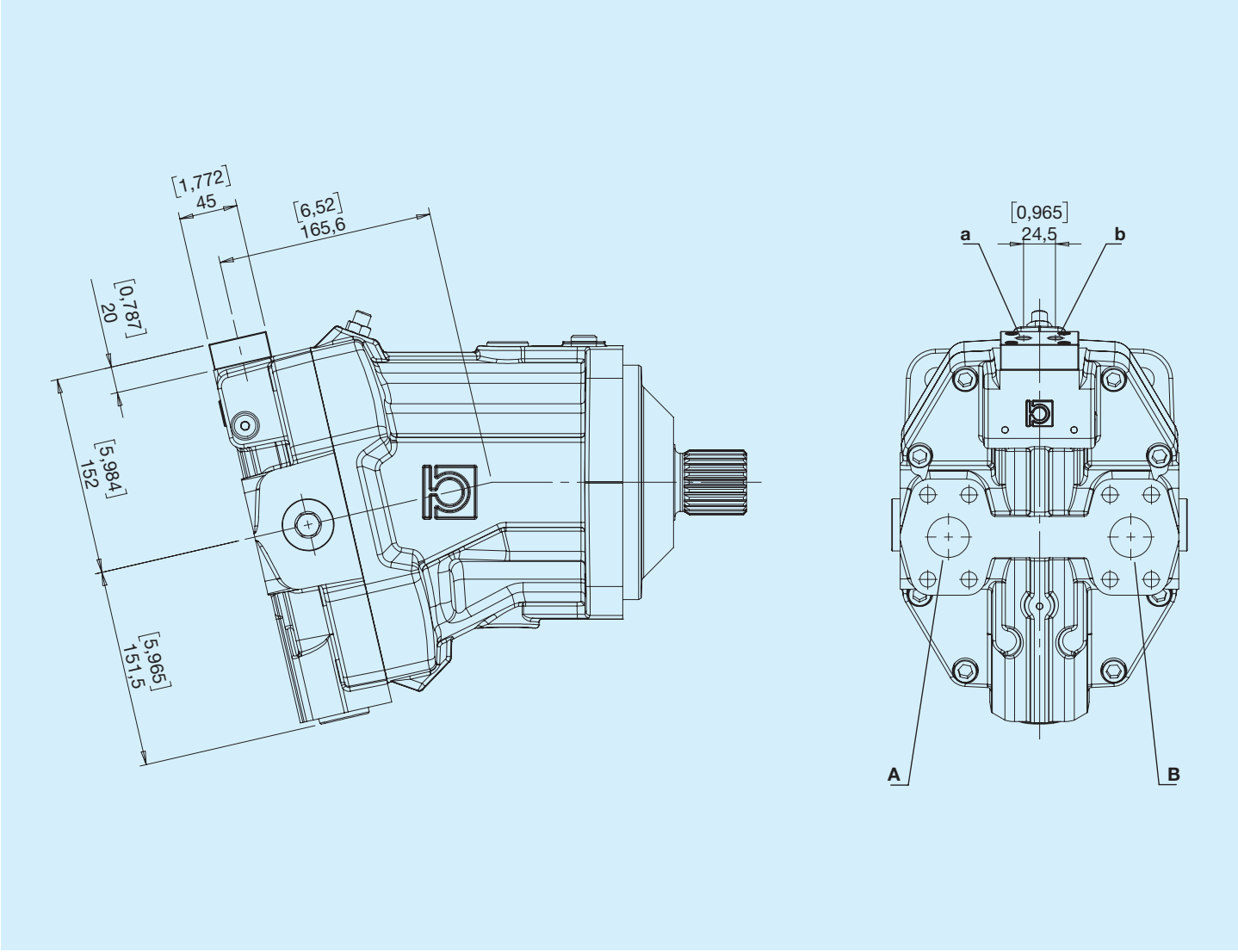

Inlet	Rotation
Right	Left
Right	Right

Pilot

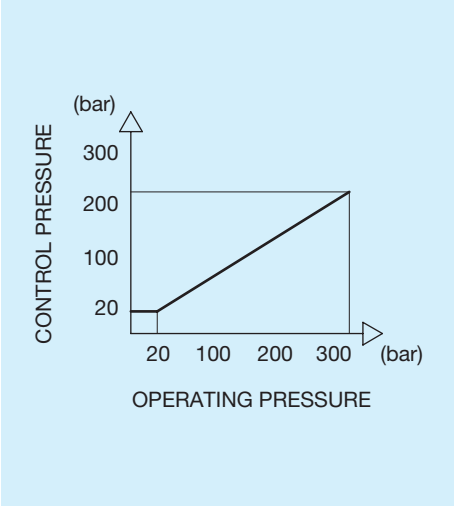

Hydraulic diagram

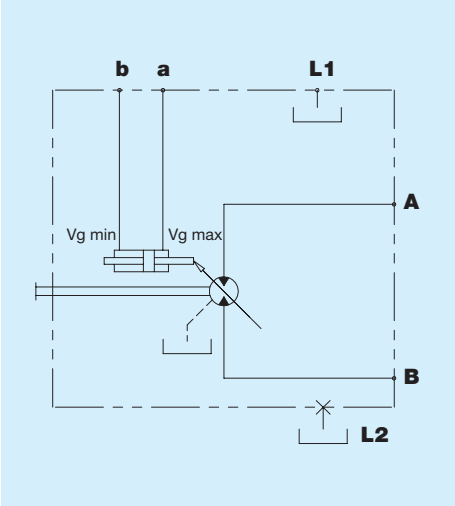

K Hydraulic, 2-position, low pressure

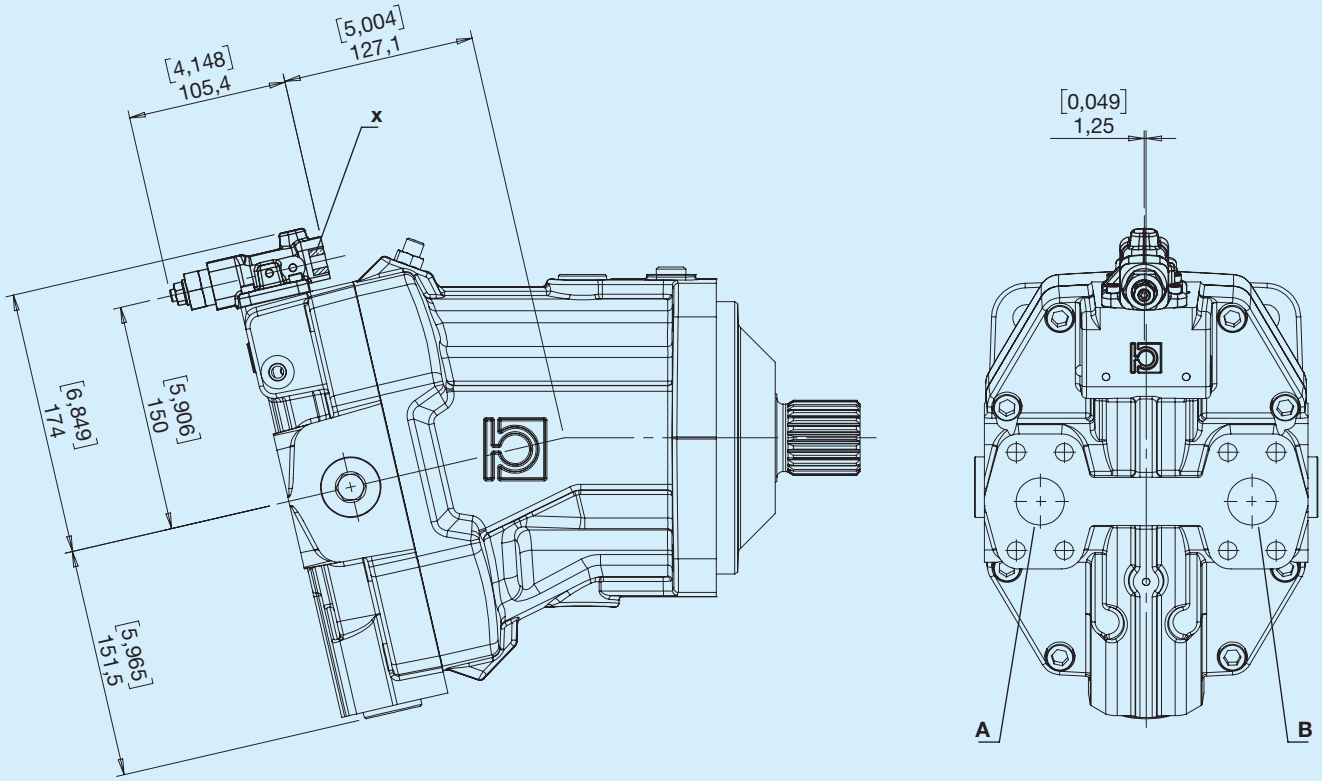

X - Pilot G1/8

Inlet	Rotation
Right	Left
Right	Right

Diagram

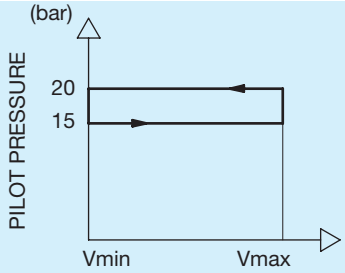

The motor is normally at maximum displacement. By applying external pressure to the pilot valve, the motor switches to minimum displacement. For correct displacement variation, observe the pilot pressure values shown in the diagram.

Hydraulic diagram

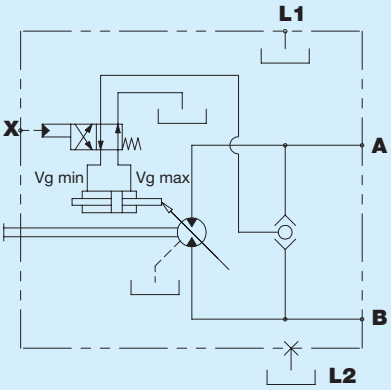

O Electronic proportional feedback control 12V

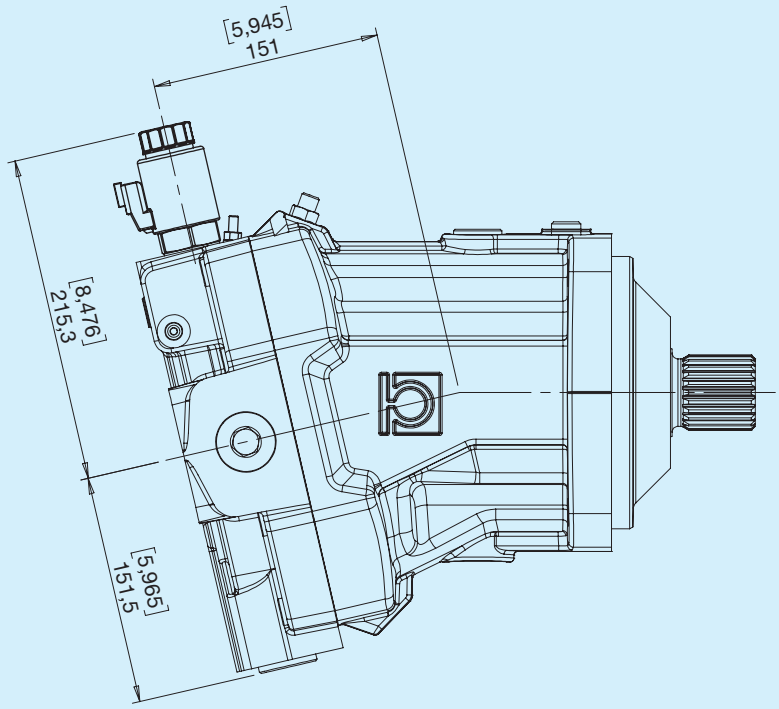

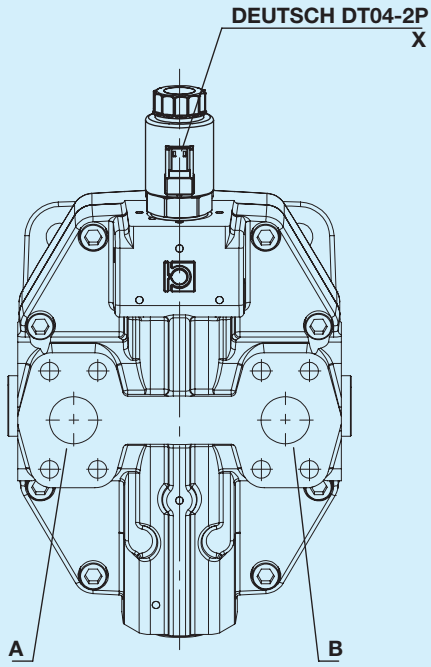

X - Solenoid valve

Inlet	Rotation
Right	Left
Right	Right

Pilot

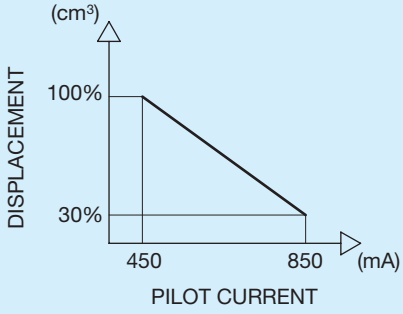

Hydraulic diagram

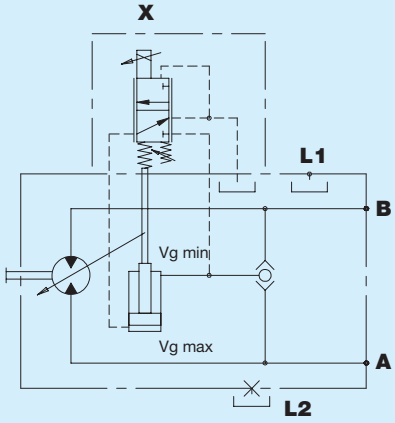

V Electronic proportional feedback control 24V

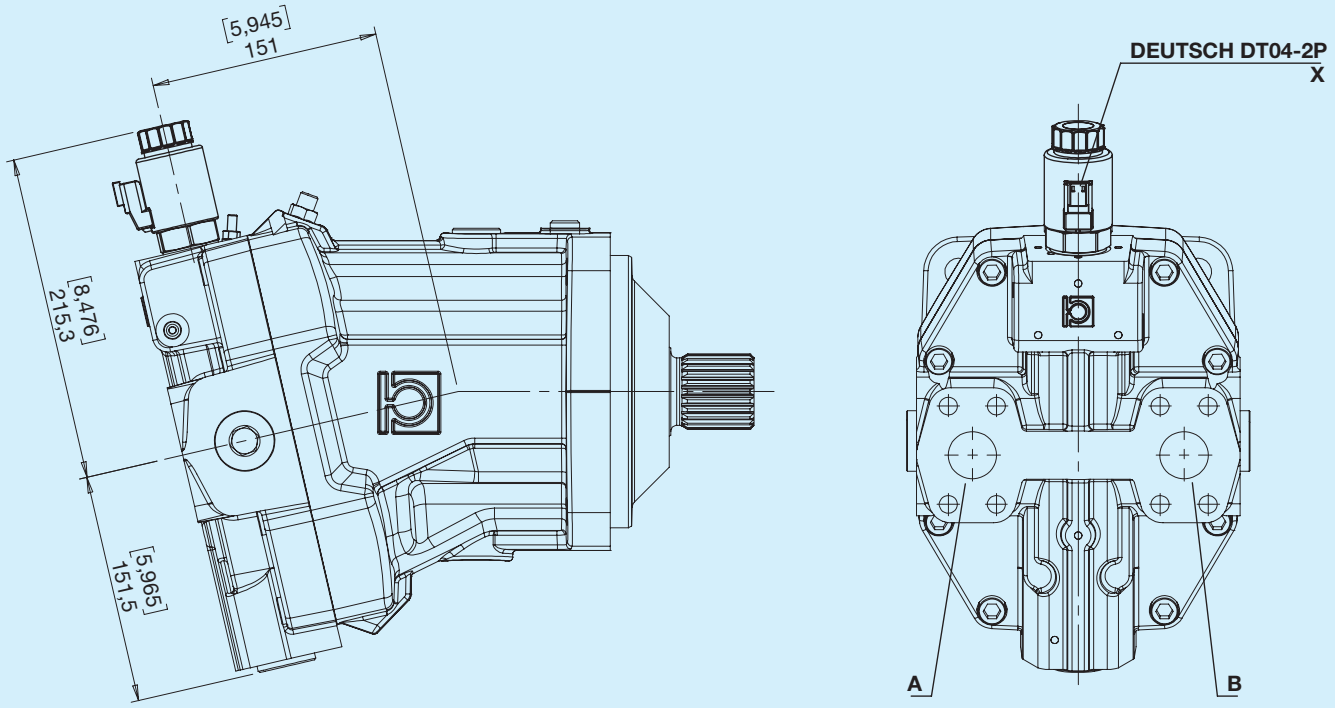

X - Solenoid valve

Inlet	Rotation
Right	Left
Right	Right

Pilot

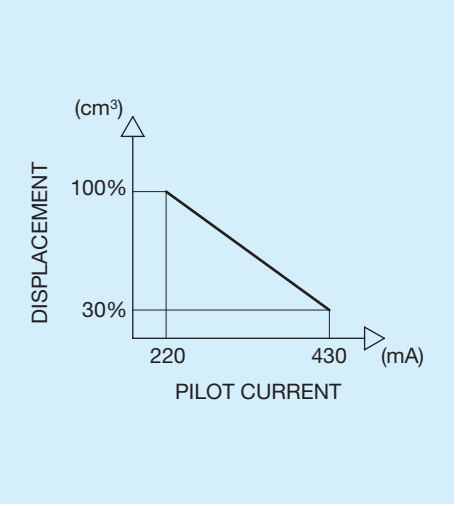

Hydraulic diagram

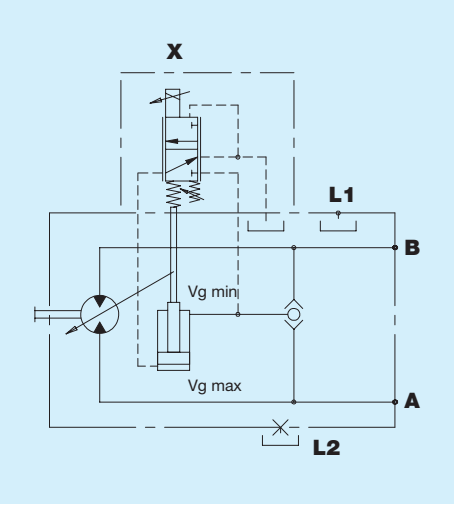

R Electric ON/OFF with pressure override and channel selector

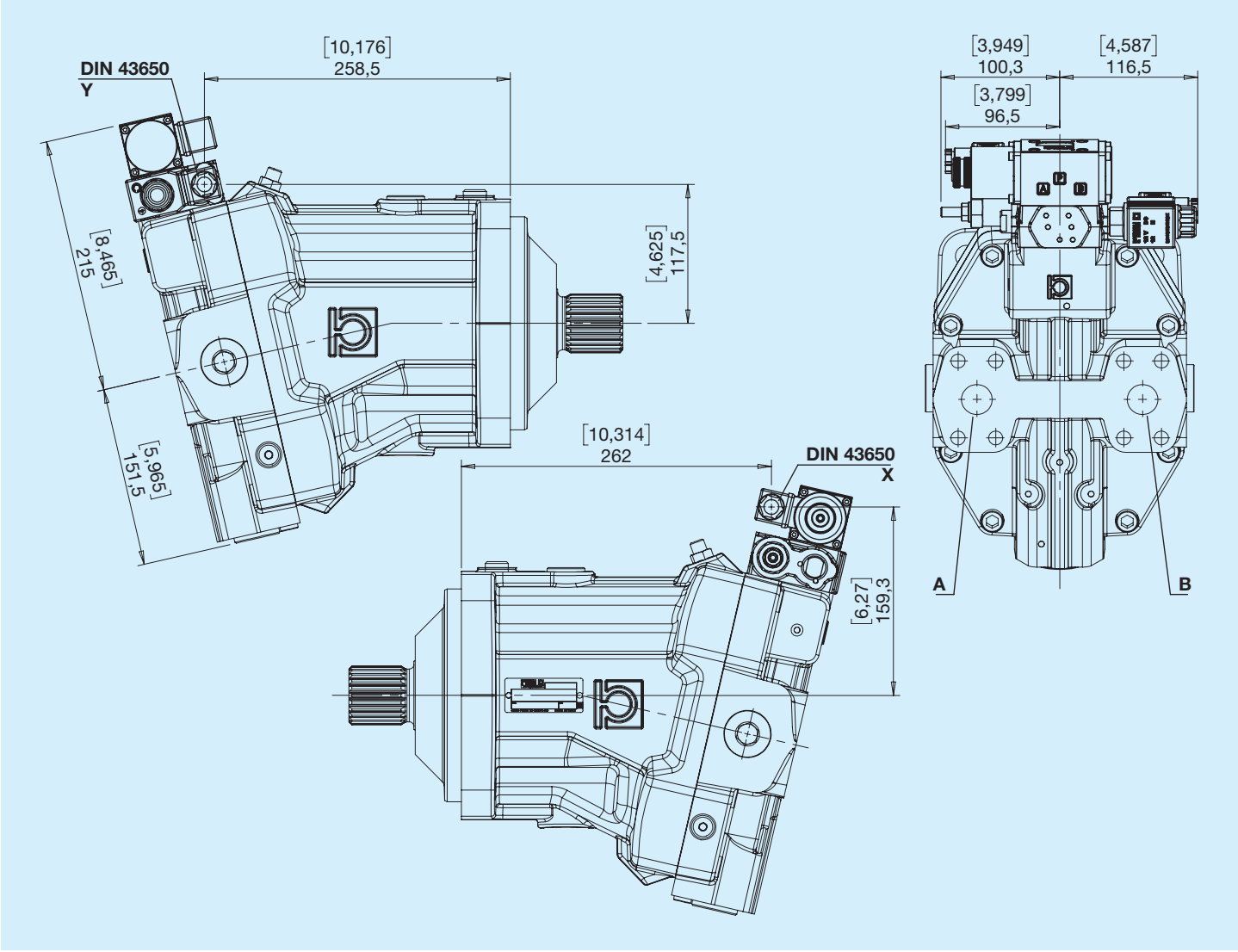

Inlet	Rotation
Right	Left
Right	Right

Hydraulic diagram

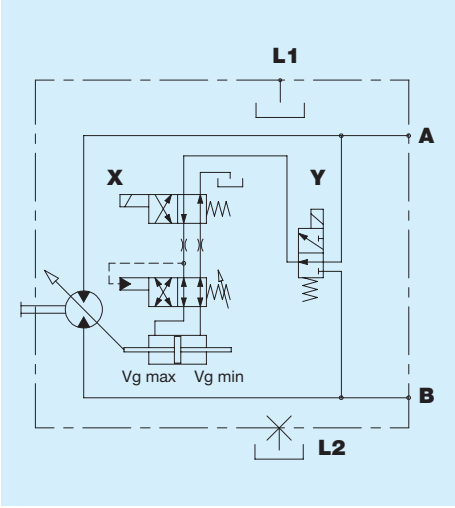

U Electric ON/OFF with pressure override

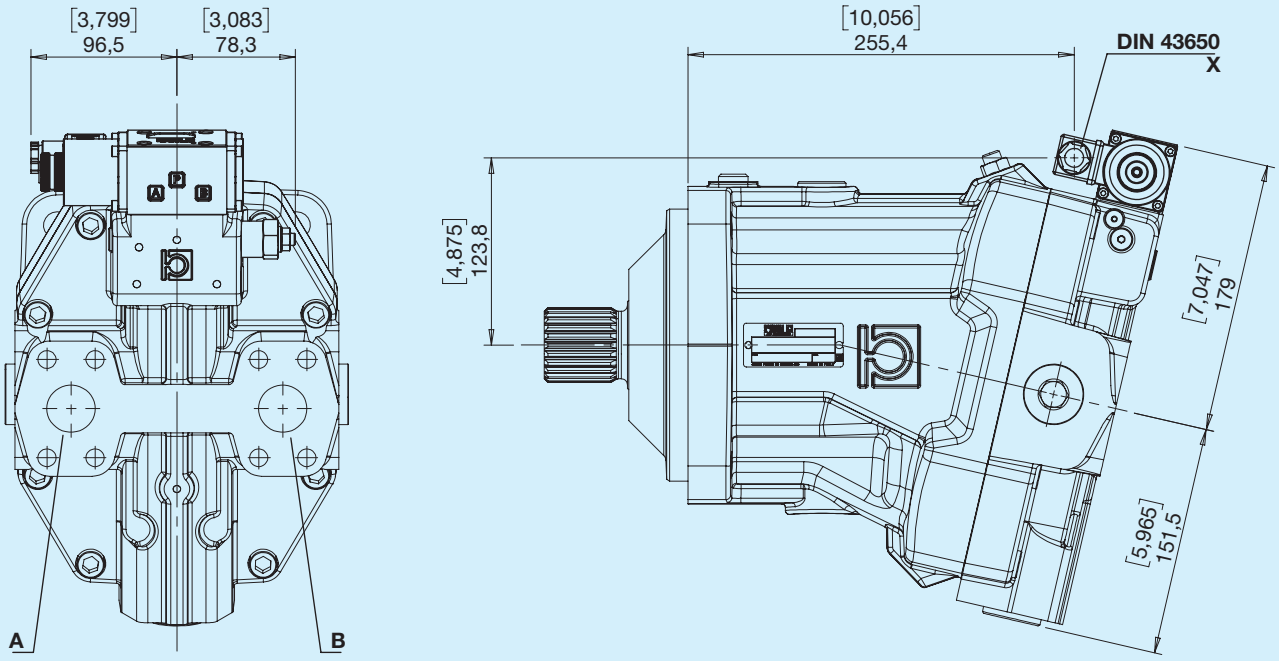

Inlet	Rotation
Right	Left
Right	Right

Hydraulic diagram

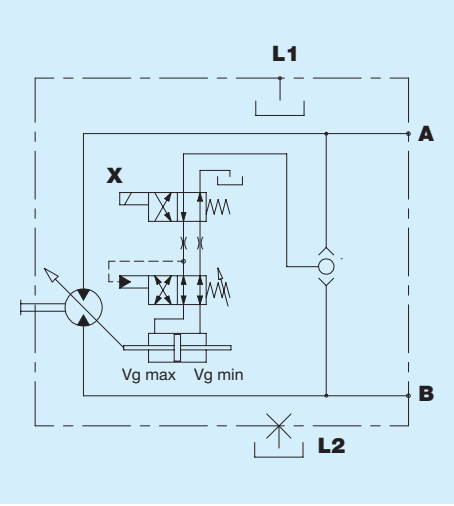

V Flushing valve (5-7 l/min)

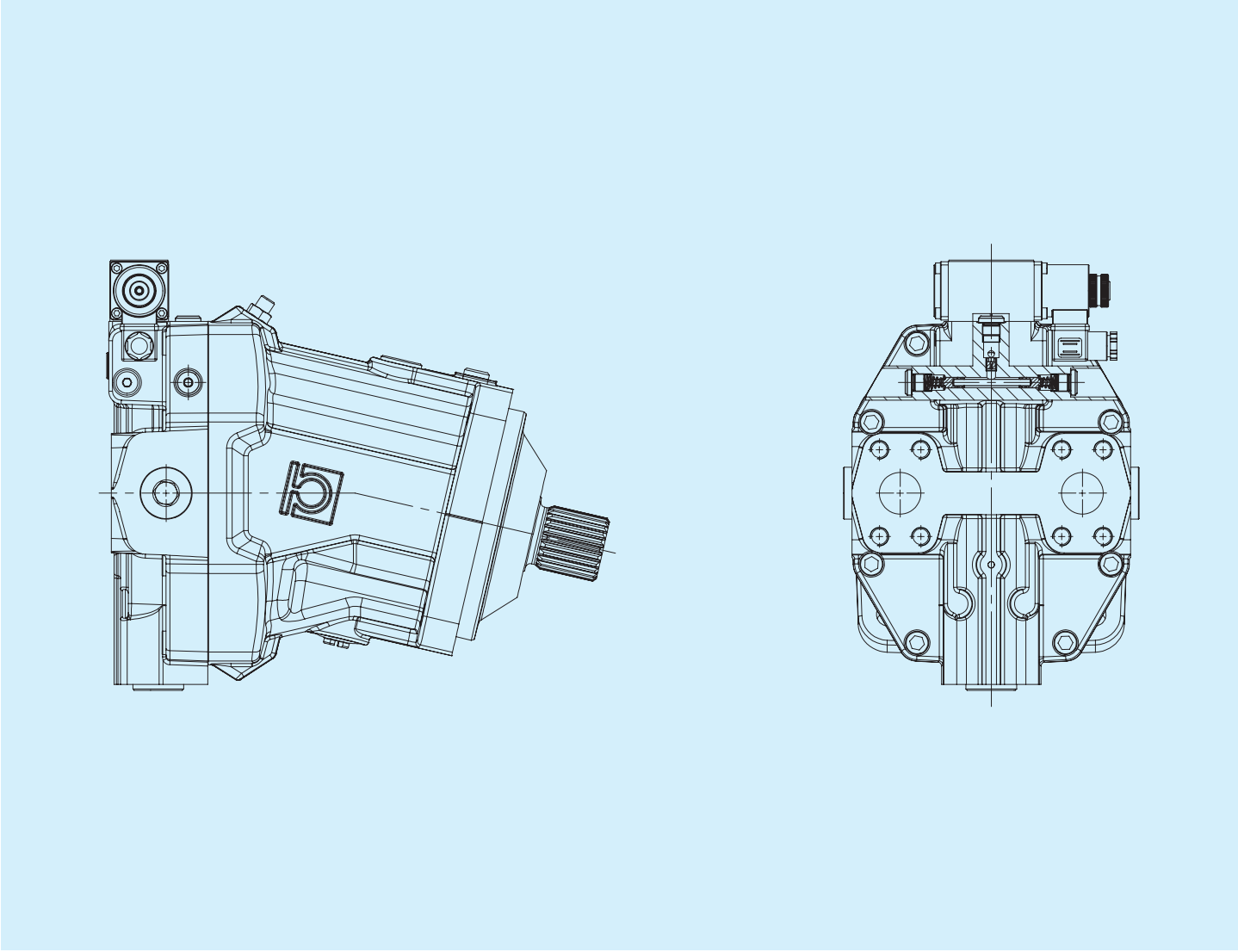

Hydraulic diagram

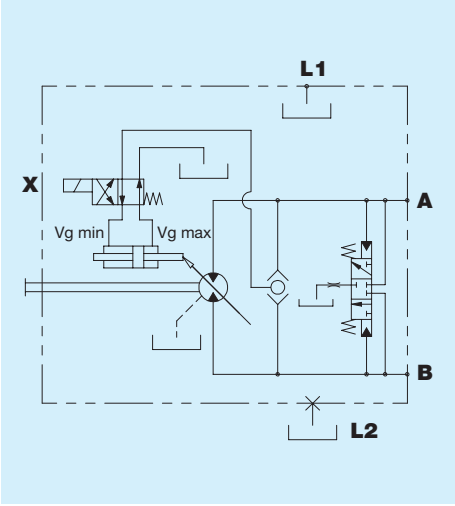

Instructions for ordering

HPBA 160-200	1	2	3	4	5	6	7	8	9	10	11	12	13	14

1 2 3 — Standard displacement

160	**200**

4 5 — Minimum displacement

...

6 — Flanges

I	ISO 4 holes standard	**P**	ISO 2 holes cartridge centring

7 — Shafts

D	DIN 5480 W45x2x30x21	**E**	DIN 5480 W50x2x30x24

8 — Type of ports

G	Gas	**U**	UNF	**N**	Gas-SAE inlet/outlet	**M**	UNF-SAE inlet/outlet

9 — Position of ports

P	Rear	**L**	Opposite sideways	**Y**	Rear with rotated valve (not available for O - V - G controls)	**J**	Opposite sideways with rotated valve (not available for O - V - G controls)

10 — Controls

A	Hydraulic automatic, ON/OFF	**G**	Proportional hydraulic	**O**	Electronic proportional feedback control 12V	**U**	Electric ON/OFF with pressure override
E	Electric 2-position 12V	**H**	Direct hydraulic, 2-position	**V**	Electronic proportional feedback control 24V		
F	Electric 2-position 24V	**K**	Hydraulic, 2-position, low pressure	**R**	Electric ON/OFF with pressure override and channel selector		

11 — Accessories

0	No option	**V**	Flushing valve	**V**	Flushing valve

12 13 14 — Special versions

...