Closed circuit variable-displacement axial piston pumps and motors

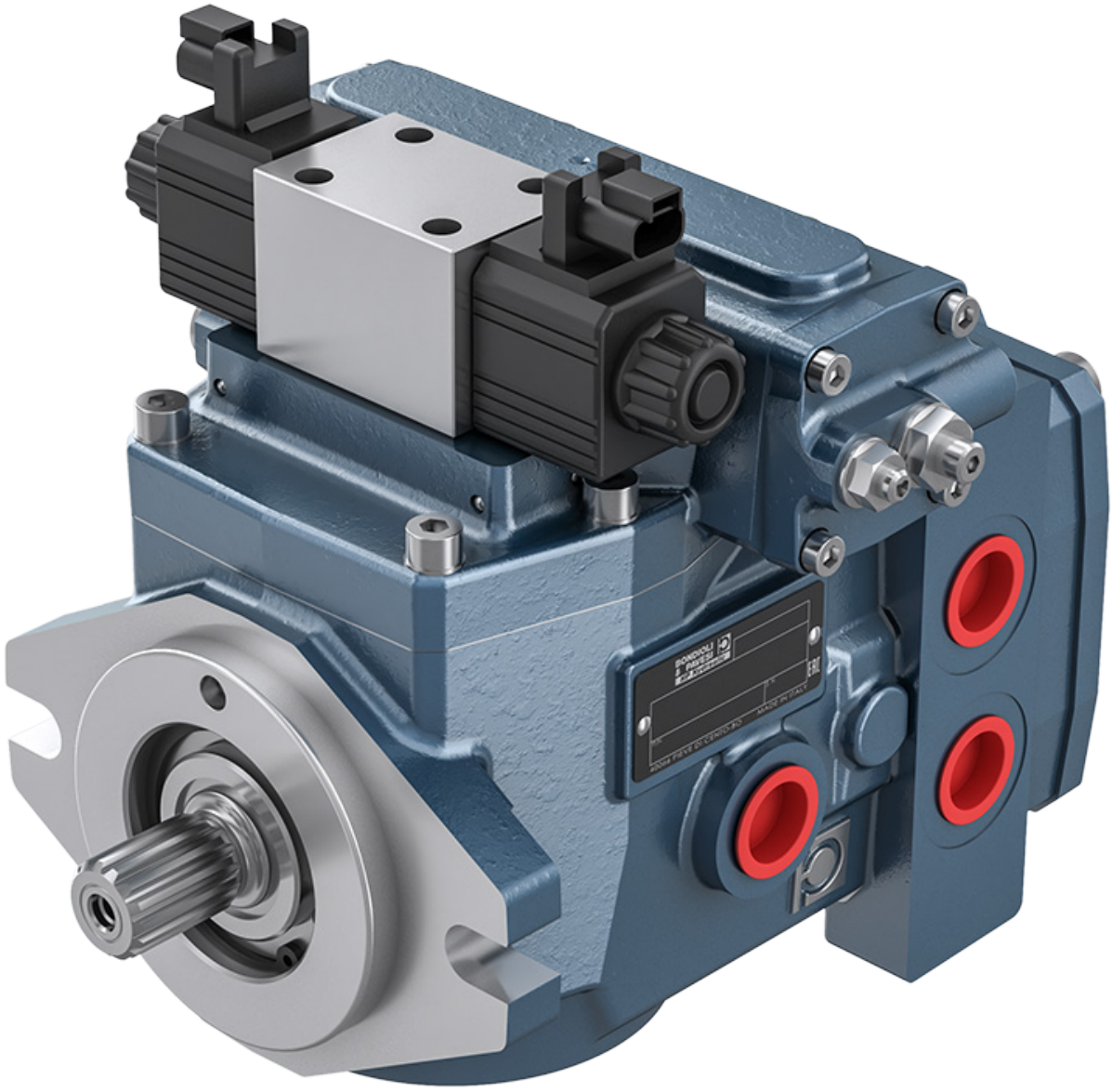

Before using the axial piston pumps, carefully read the document entitled GENERAL INSTRUCTIONS FOR USE OF AXIAL PISTON PUMPS AND MOTORS.

Dimensions

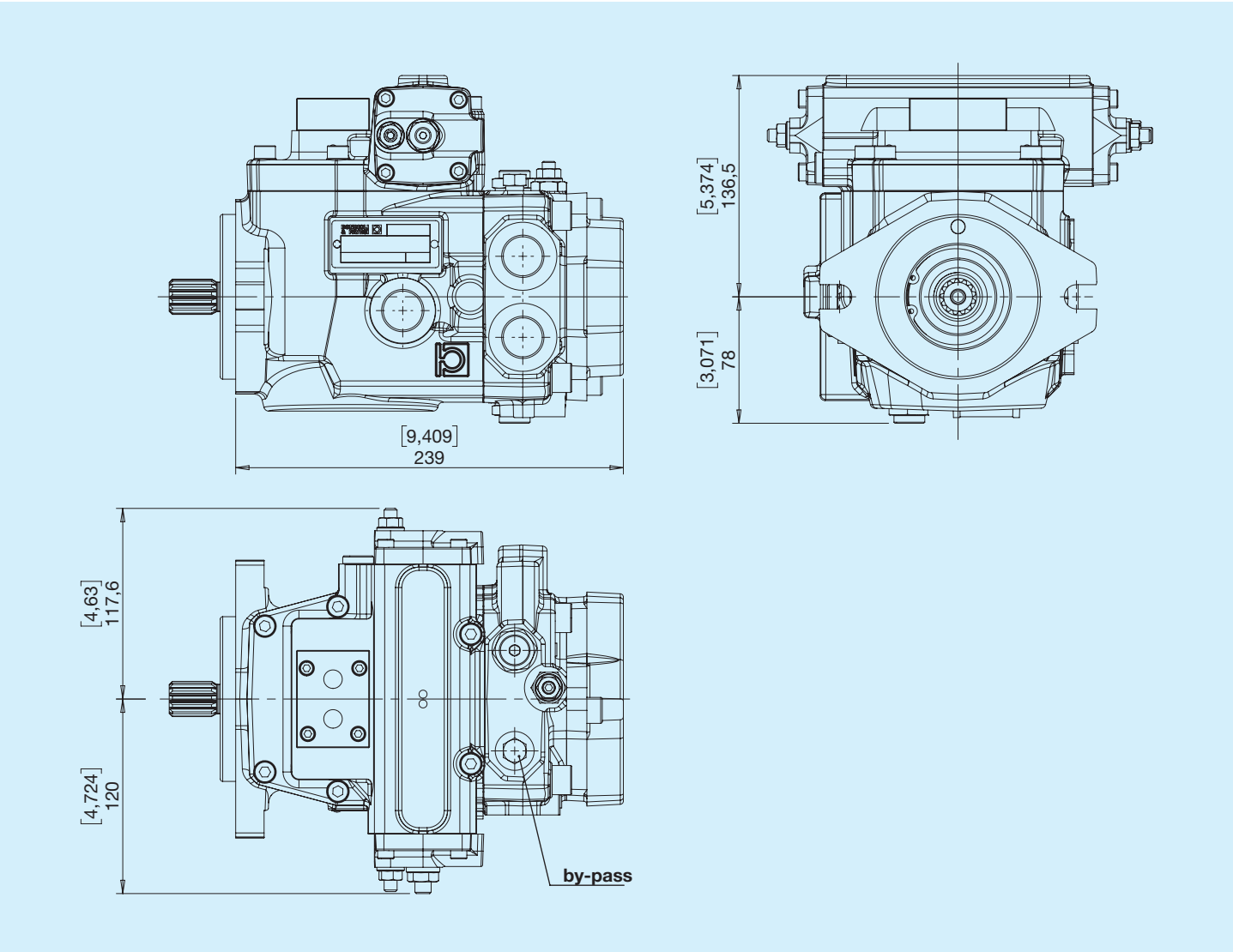

HNM4	Nominal displacement		Swash plate	Continuous pressure		Intermittent pressure		Peak pressure		Rotational speed		Weight	
	cm³	in³	°	bar	psi	bar	psi	bar	psi	min⁻¹	min⁻¹	kg	lbs
040	40	2.44	14.6	210	3046	250	3626	280	4061	3800	500	25.0	55.1
045	45	2.75	16.3	210	3046	250	3626	280	4061	3800	500	25.0	55.1
050	50	3.05	18	210	3046	250	3626	280	4061	3800	500	25.0	55.1
B45	45	2.75	16.3	300	4351	380	5511	400	5801	3800	500	25.0	55.1
B50	50	3.05	18	300	4351	380	5511	400	5801	3800	500	25.0	55.1
B58	58	3.54	18	250	3626	320	4641	400	5801	3600	500	26.5	58.4

Feed pump

Type	Feed pump displacement		Pressure	
	cm^3	**in^3**	**bar**	**psi**
HNM4	14	0.86	22	319

B SAE B

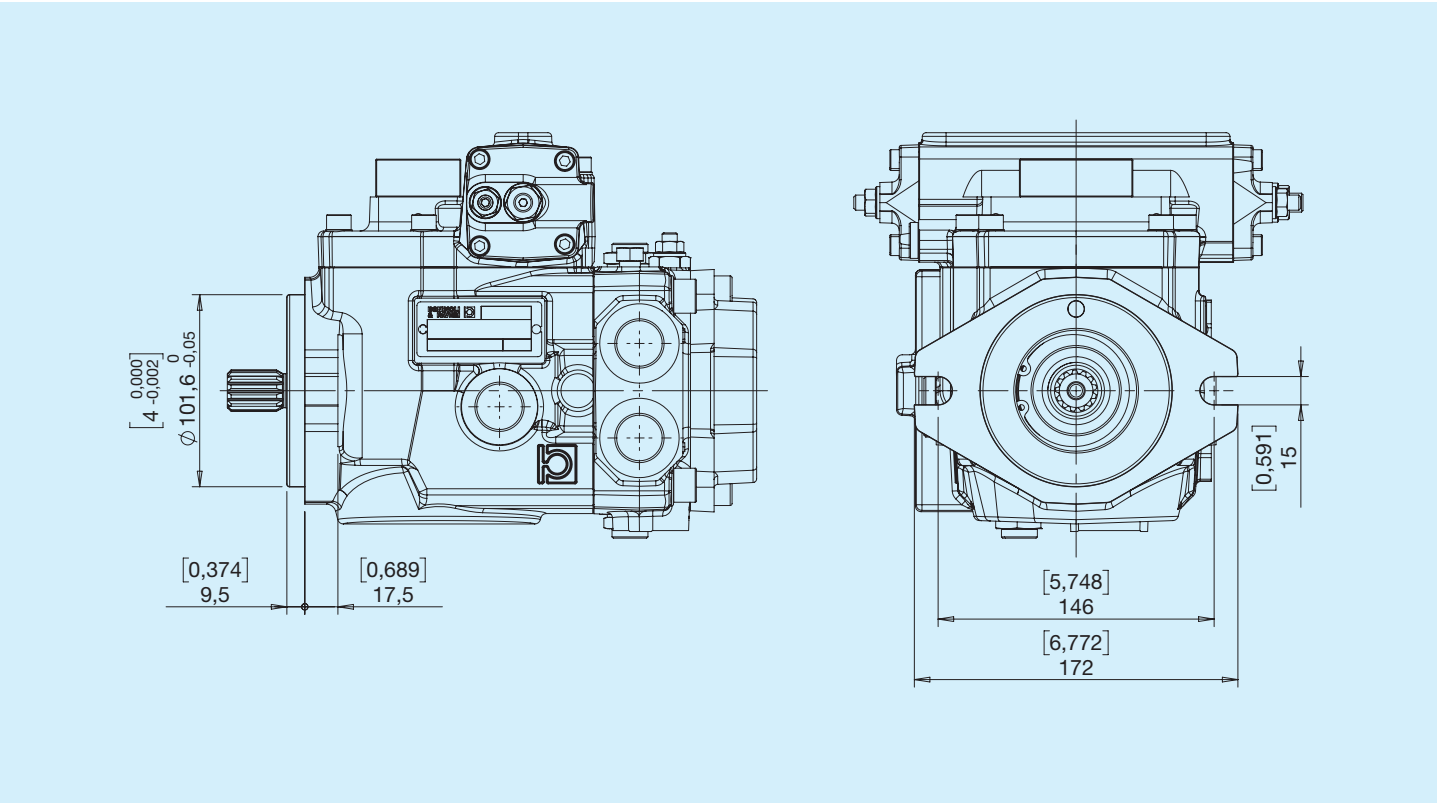
[4 0,000 -0,002]
⌀101,6 0 -0,05
[0,374]
9,5
[0,689]
17,5
[0,591]
15
[5,748]
146
[6,772]
172

Shaft profile

3 SAE 15T 16/32 DP

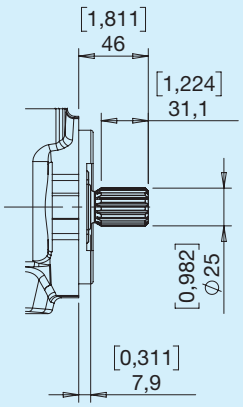

Coppia Max 460 Nm

6 SAE 13T 16/32 DP

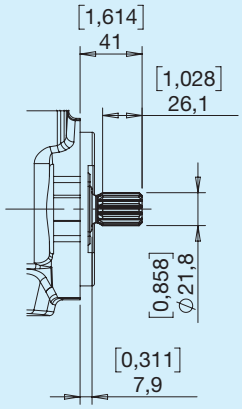

Coppia Max 310 Nm

Position of ports

A,B - Use
L1, L2 - Drain port
S - Inlet
P - Pressure intake
M1, M2 - Manometer intake

Ports

Type G2-G6

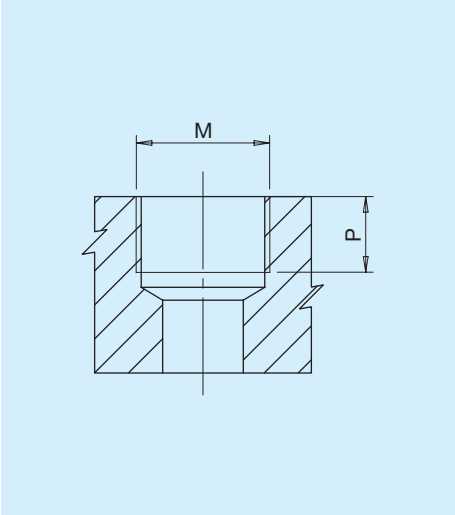

Type	M	M	P	
		Nm	**mm**	**in**
G2	Port ISO 1179-1 - G 1/4	17	12	0.47
G6	Port ISO 1179-1 - G 3/4	90	15	0.59

Type U2-U6

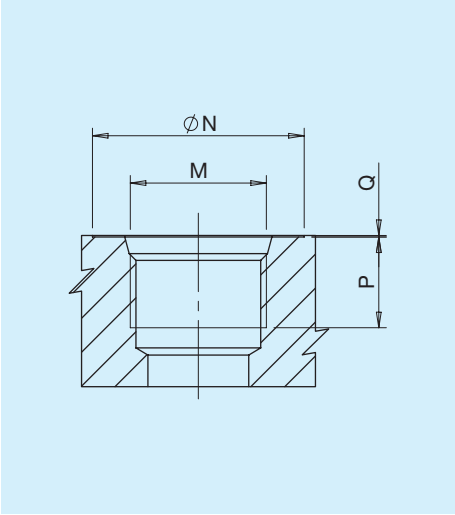

Type	Dim.	N		P		Q		M	
		mm	**in**	**mm**	**in**	**mm**	**in**		**Nm**
U2	1/4''	20	0.79	12	0.47	0.3	0.01	Port ISO 11926-1-7/16-20	17
U6	3/4''	42	1.65	18	0.70	0.3	0.01	Port ISO 11926-1-1 5/16-12	90

Combinations

Type	Inlet **S**	Outlet **A-B**	Drain port **L1-L2**	Pressure intakes **P**	Manometer intakes **M1 - M2**
G	G6	G6	G6	G2	G2
U	U6	U6	U6	G2	U2

E F Electrical ON/OFF, closed centre 12V / 24V

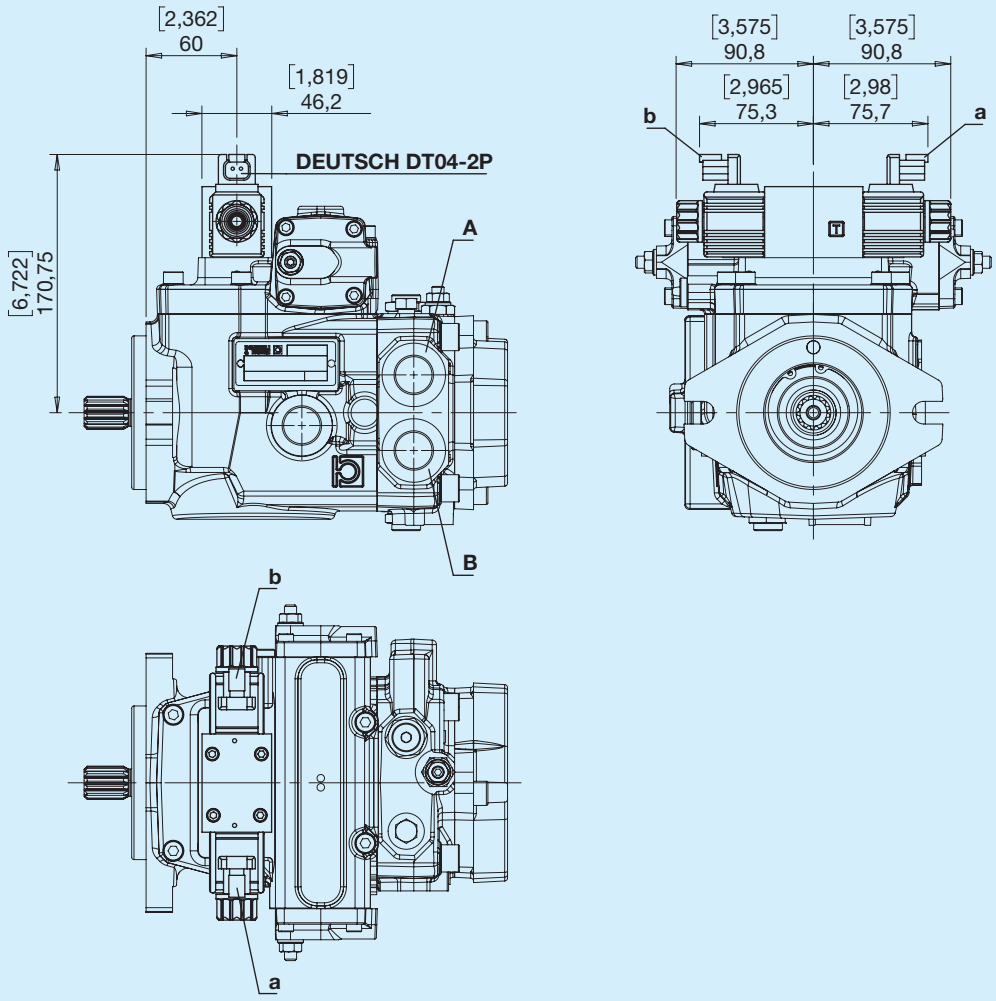

Available on request with DIN 43650 connectors

Outlet

Rotation	Excited solenoid	Outlet
Right	a	B
Right	b	A
Left	a	A
Left	b	B

Hydraulic diagram

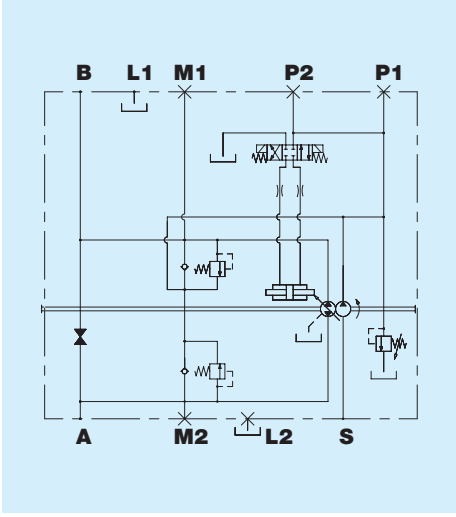

N Q Electrical ON/OFF, open centre 12V / 24V

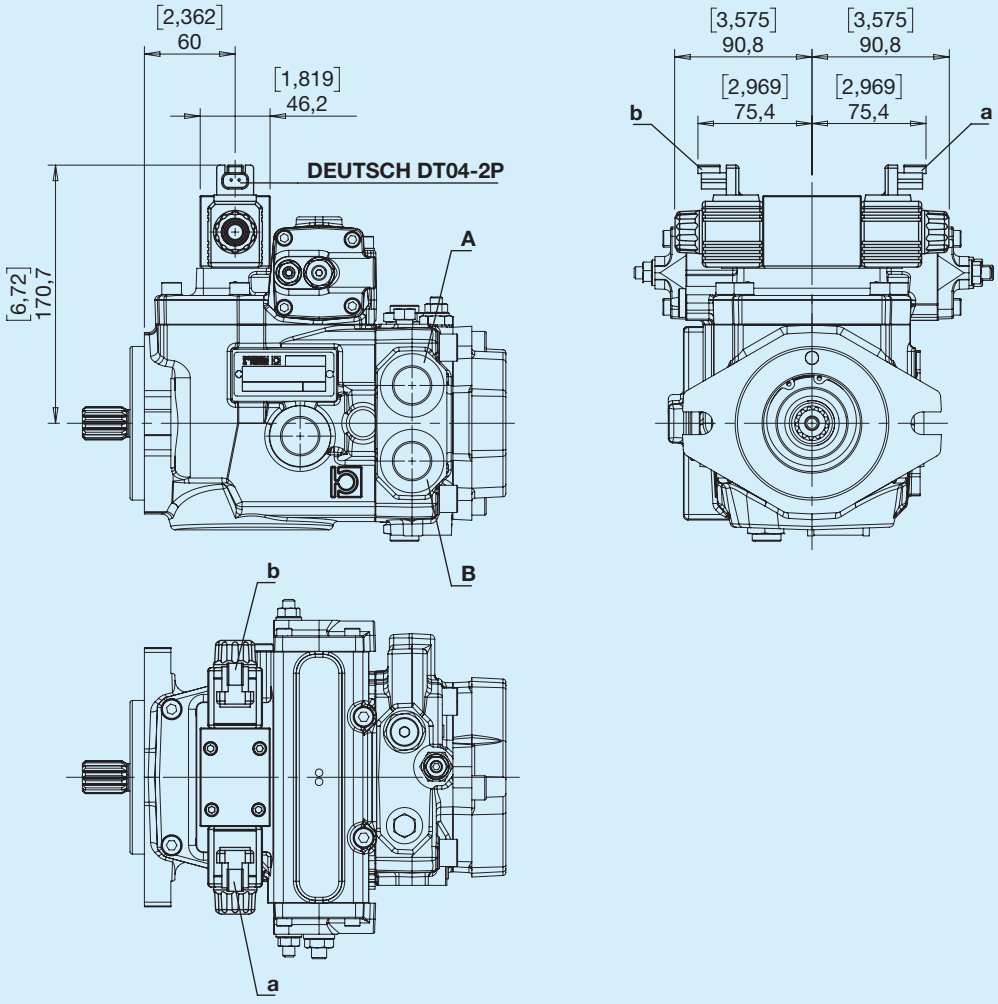

Available on request with DIN 43650 connectors

Outlet

Rotation	Excited solenoid	Outlet
Right	a	B
Right	b	A
Left	a	A
Left	b	B

Hydraulic diagram

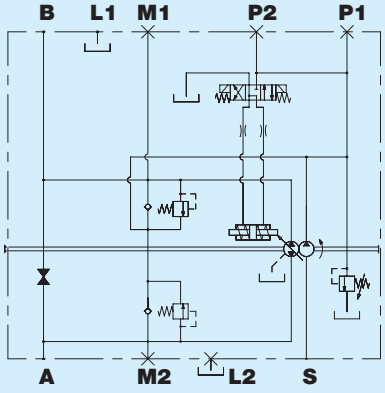

I Lever-operated hydraulic

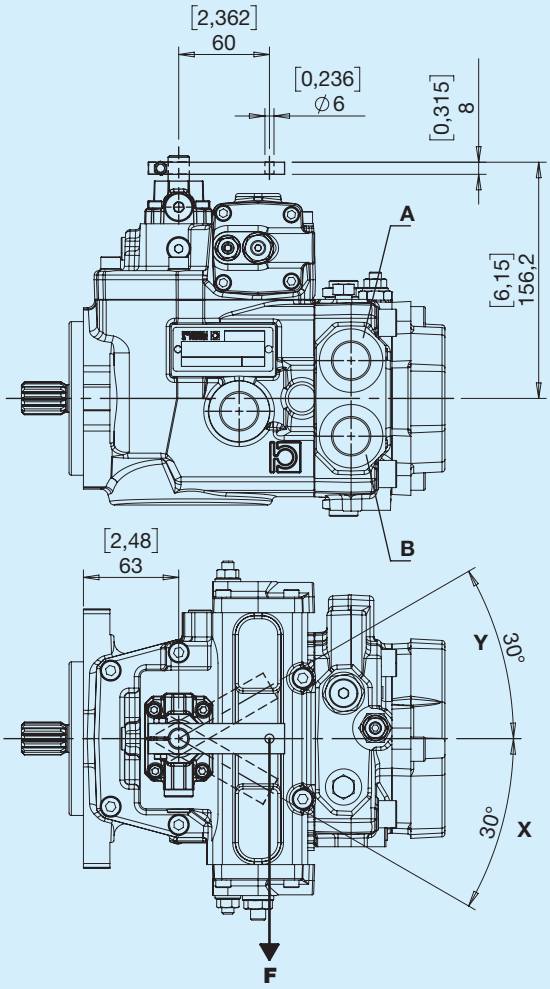

Outlet

Rotation	Control lever	Outlet
Right	Y	A
Right	X	B
Left	Y	B
Left	X	A

Pilot pressure

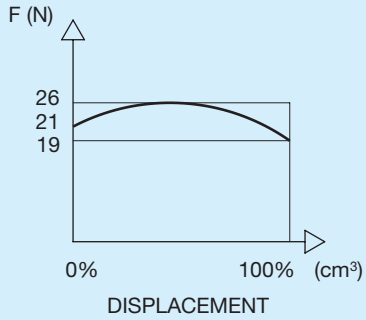

Hydraulic diagram

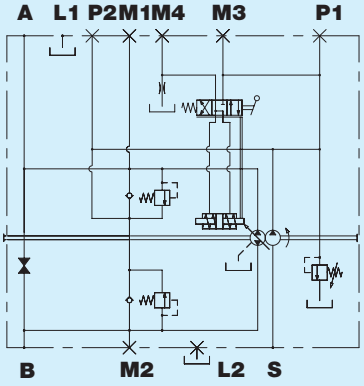

K Direct hydraulic

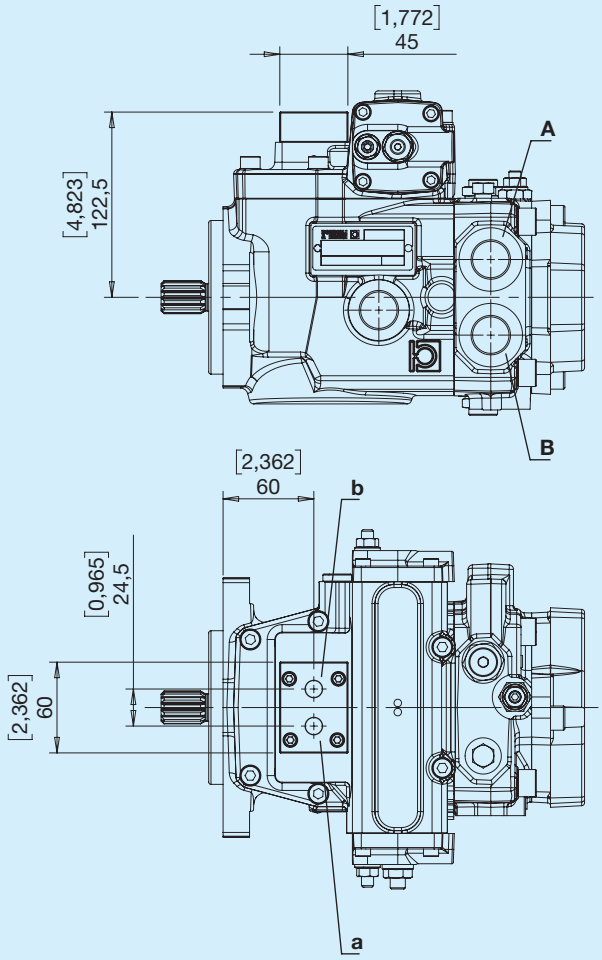

Outlet

Rotation	Pilot pressure	Outlet
Right	a	A
Right	b	B
Left	a	B
Left	b	A

Pilot pressure

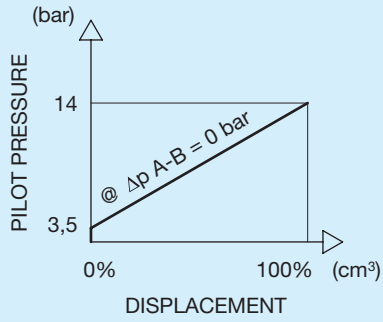

Hydraulic diagram

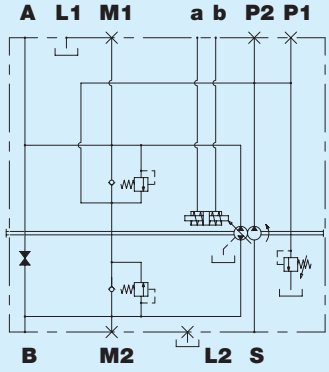

S Electronic proportional control 12V

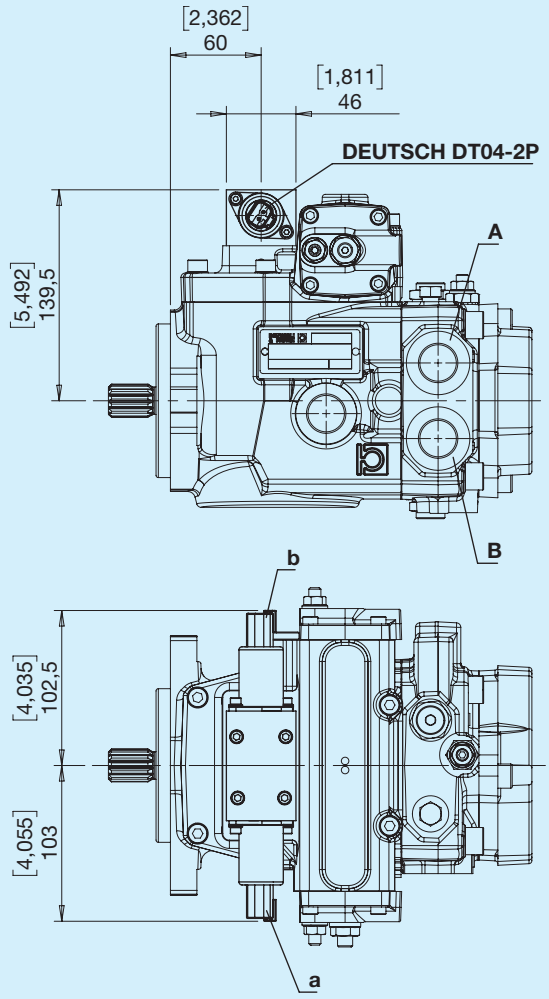

Available on request with AMP JUNIOR connectors

Outlet

Rotation	Excited solenoid	Outlet
Right	a	A
Right	b	B
Left	a	B
Left	b	A

Control

Rated voltage	12	V
Min. current (I1)	300	mA
Max. current (I2)	1500	mA
PWM frequency	100	Hz

Pilot pressure

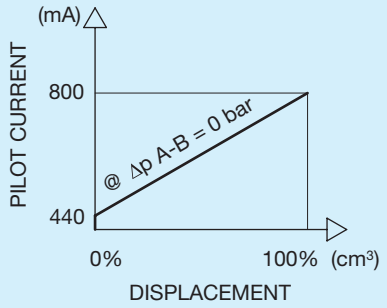

Hydraulic diagram

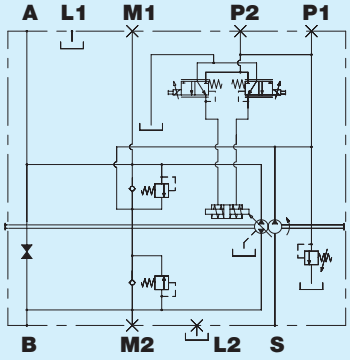

BONDIOLI & PAVESI
HP Hydraulic

W Electronic proportional control 24V

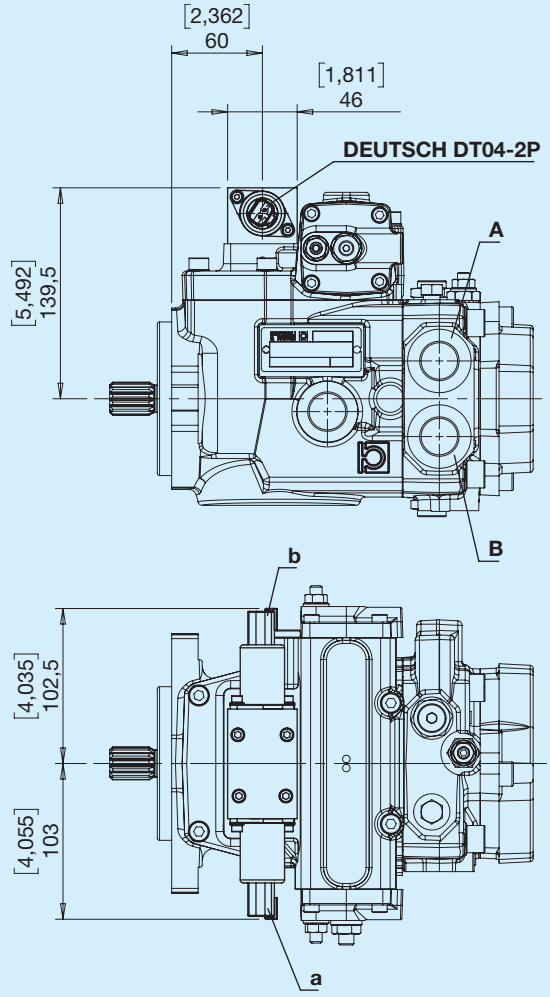

Available on request with AMP JUNIOR connectors

Outlet

Rotation	Excited solenoid	Outlet
Right	a	A
Right	b	B
Left	a	B
Left	b	A

Control

Rated voltage	24	V
Min. current (I1)	180	mA
Max. current (I2)	850	mA
PWM frequency	100	Hz

Pilot pressure

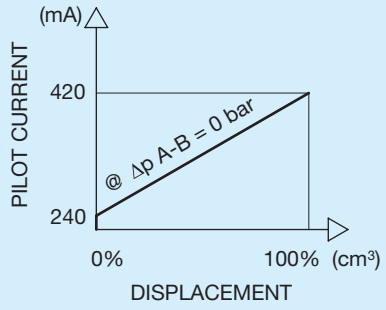

Hydraulic diagram

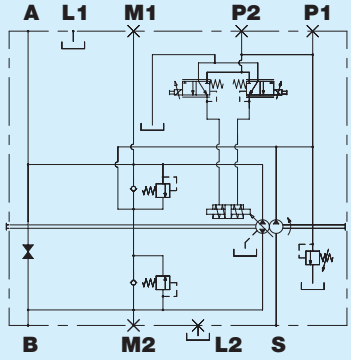

2 SAE A with boost pump

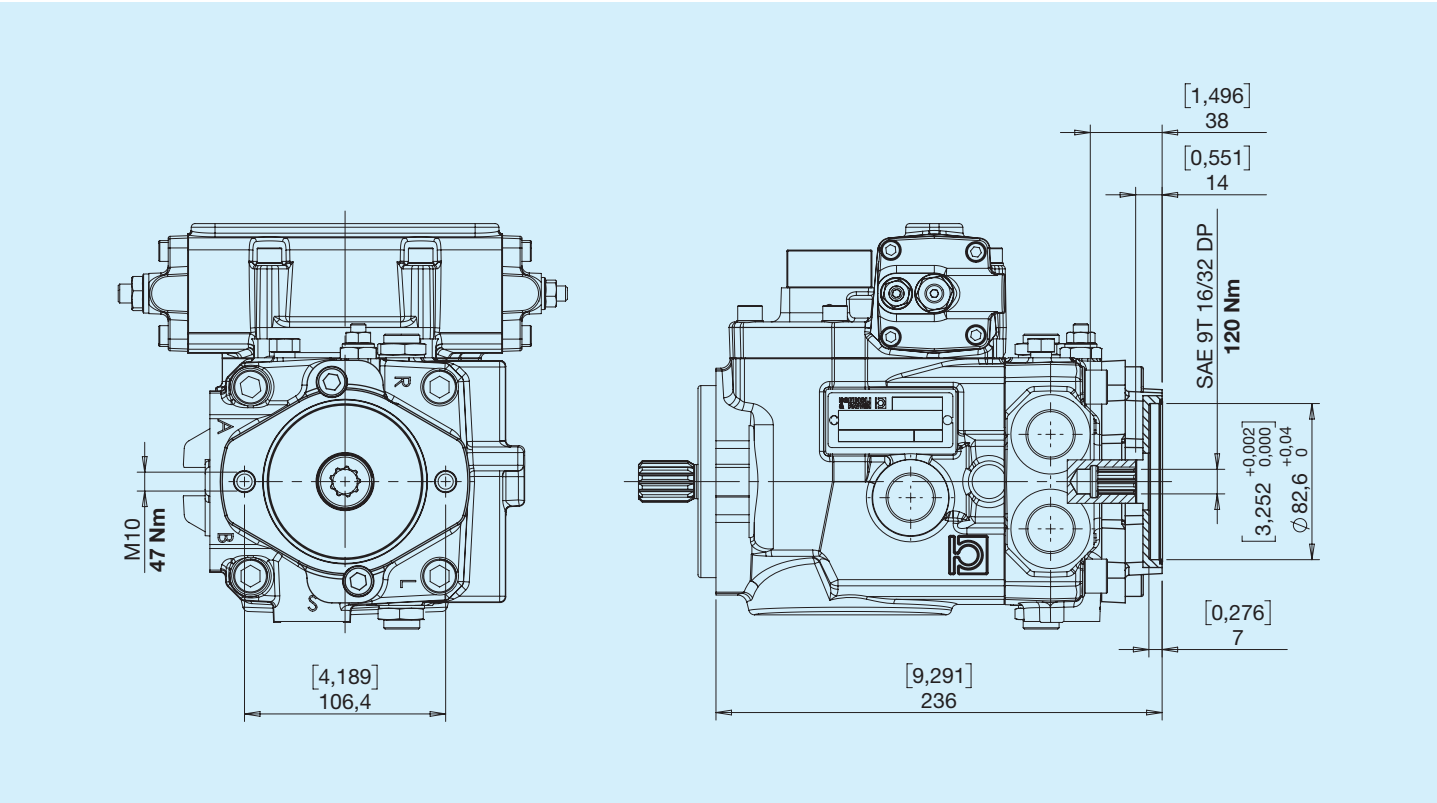

5 SAE A without boost pump

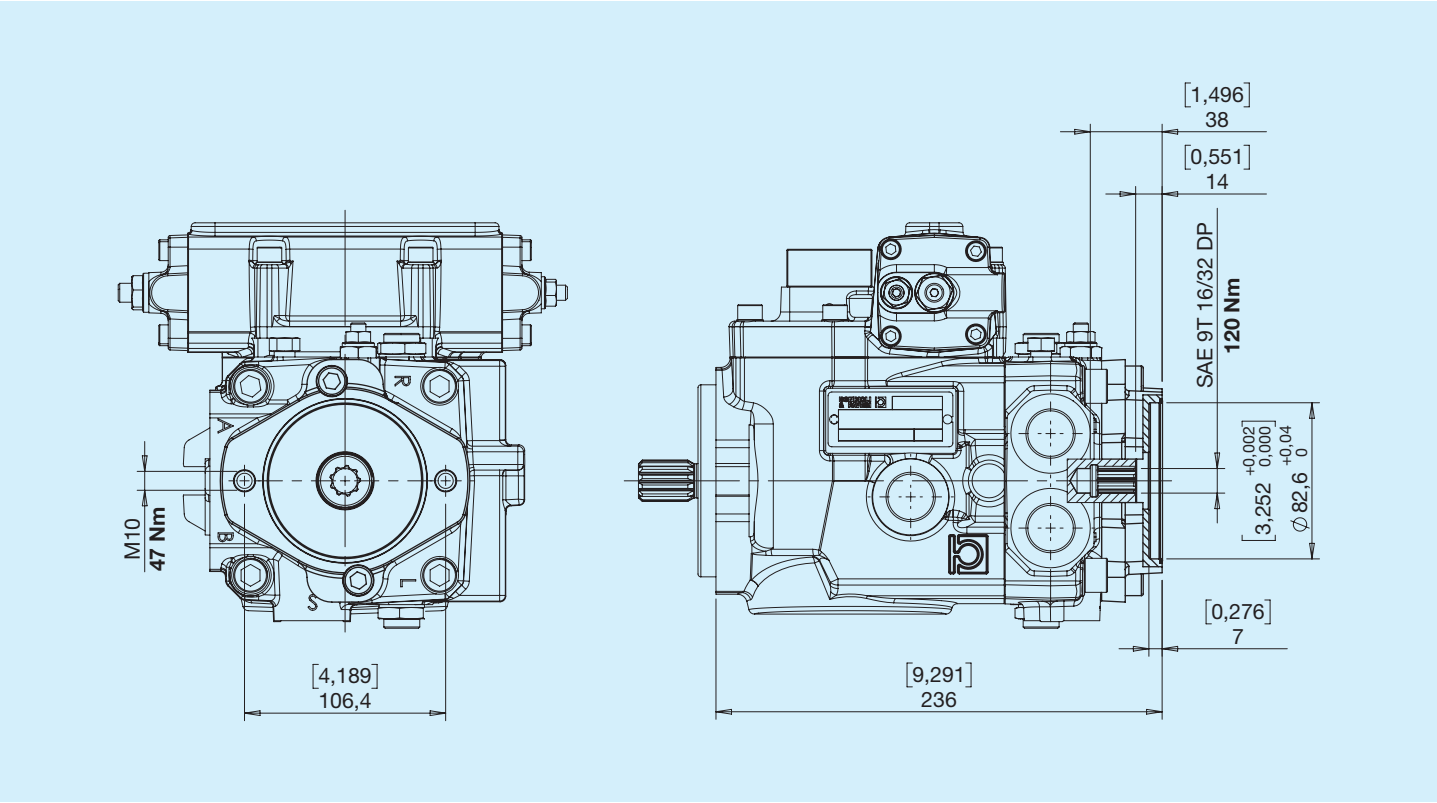

V Flushing valve (5-7 l/min)

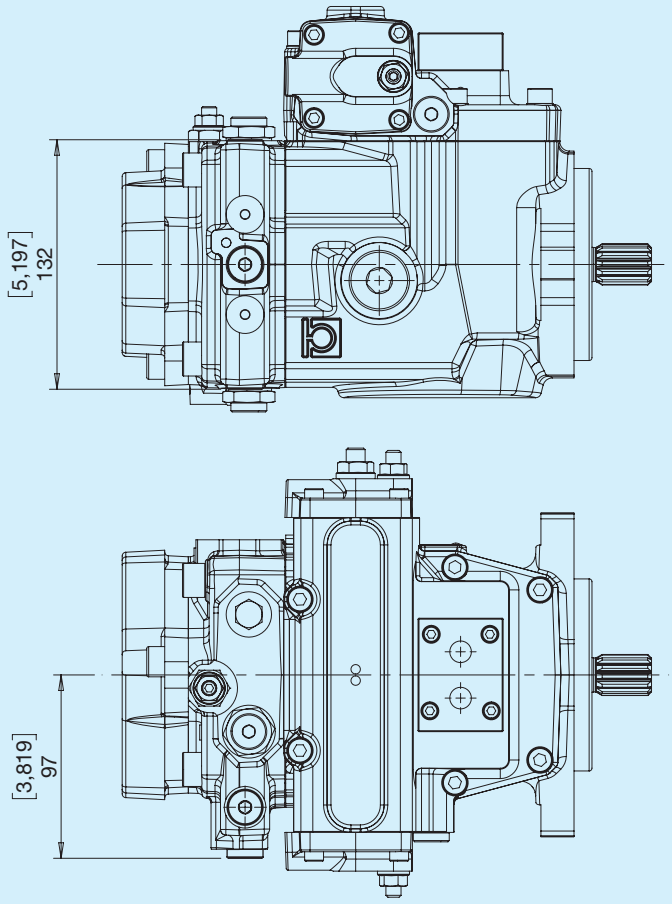

Hydraulic diagram

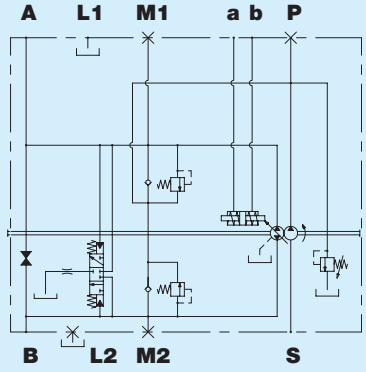

Instructions for ordering

HNM4	1 2 3	4	5	4	7	8	9	10	11	12 13 14

1 2 3 — Displacement

040	**045**	**050**
B45	**B50**	**B58**

4 — Direction of rotation

R	Right	**L**	Left

5 — Flanges

B	SAE B

4 — Shaft profile

3	SAE 15T 16/32 DP	**6**	SAE 13T 16/32 DP

7 — Type of ports

G	Gas	**U**	Unf

8 — Controls

E	Electrical ON/OFF, closed centre 12V	**N**	Electrical ON/OFF, open centre 12V	**I**	Lever-operated hydraulic	**S**	Electronic proportional control 12V
F	Electrical ON/OFF, closed centre 24V	**Q**	Electrical ON/OFF, open centre 24V	**K**	Remote hydraulic	**W**	Electronic proportional control 24V

9 — Valve calibration

B	150 bar	**E**	210 bar	**I**	280 bar	**O**	350 bar
D	180 bar	**G**	250 bar	**L**	300 bar	**P**	400 bar

10 — Through Drive

0	No special fittings, without boost pump	**1**	No special fittings, with boost pump	**2**	SAE A with boost pump	**5**	SAE A without boost pump

11 — Accessories

0	No option	**V**	Flushing valve

12 13 14 — Special versions

...