Lever mechanism double axis servo control

Before use, carefully read the document entitled GENERAL INSTRUCTIONS FOR HYDRAULIC AND ELECTRONIC SERVOCONTROLS AND SUPPLY UNIT USE.

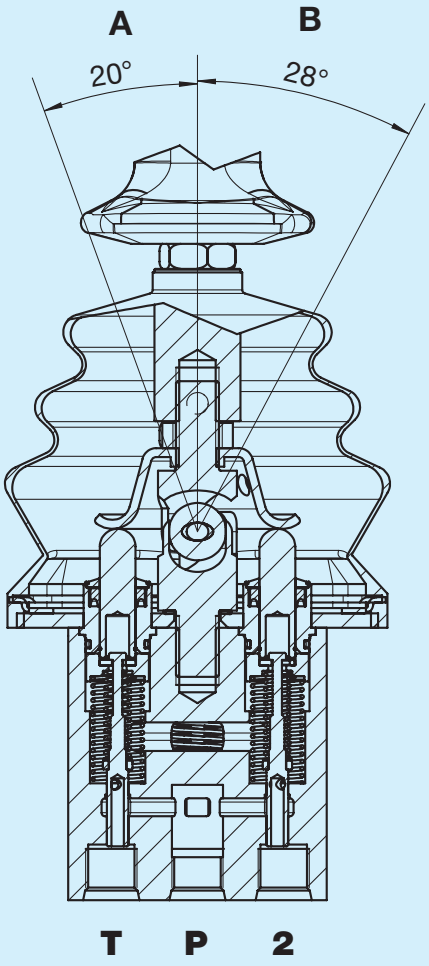

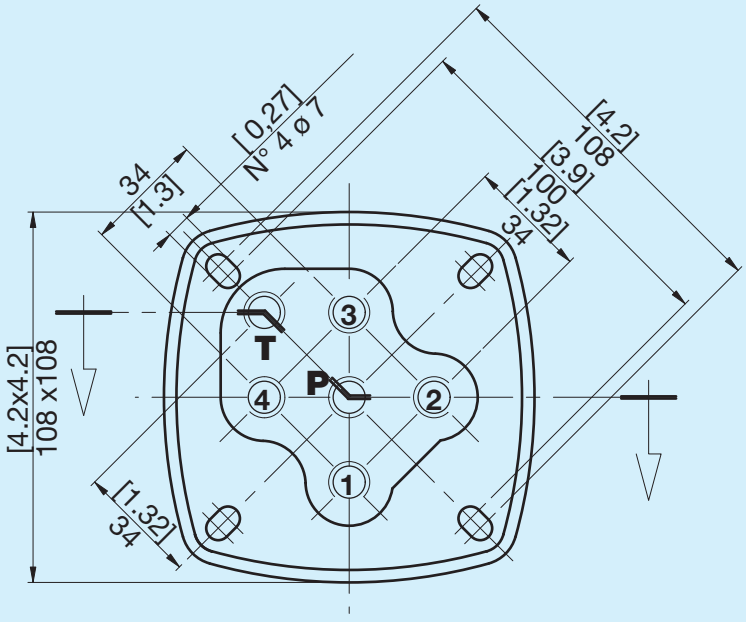

A	Angle of the lever with just one actuator operated
B	Angle of the lever with two actuators operated simultaneously

1, 2, 3, 4	Uses
T	Tank
P	Inlet

Actuator directions

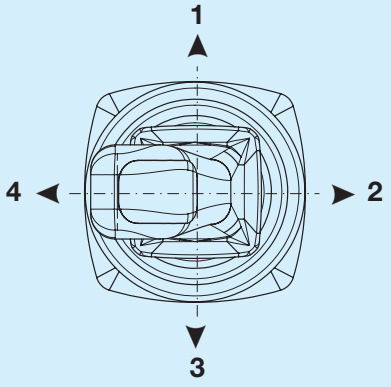

Hydraulic diagram

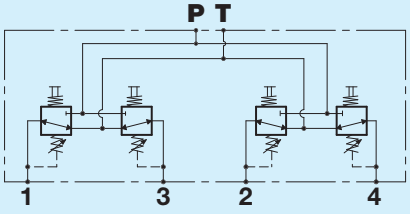

BONDIOLI & PAVESI
HP Hydraulic

1 A pressure signal from axis 2-4

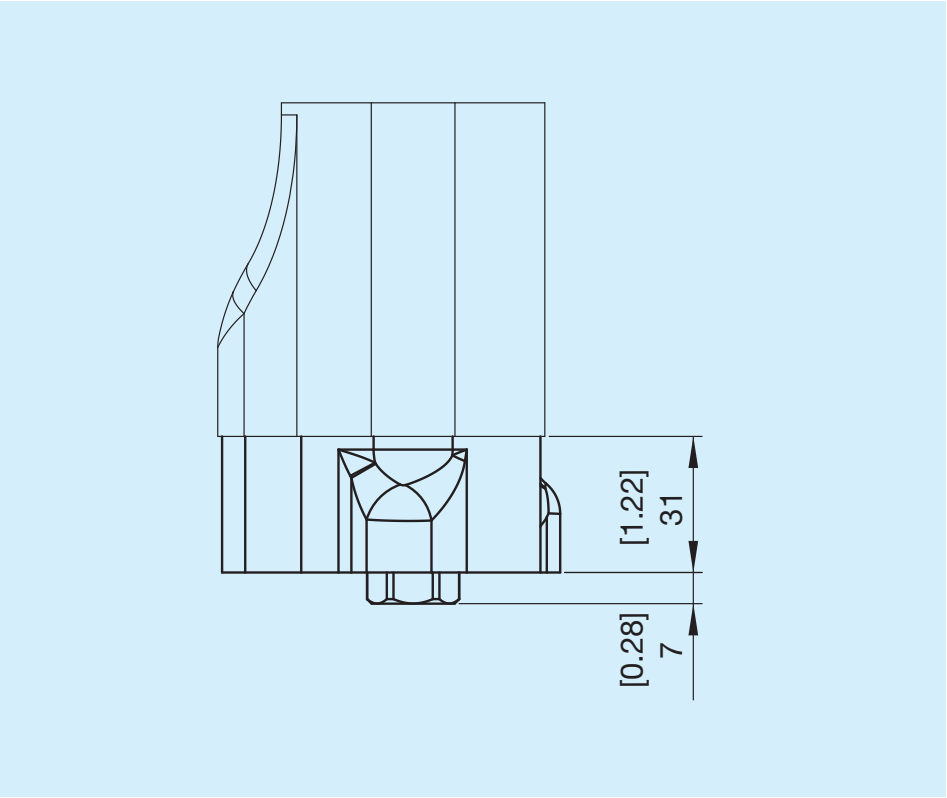

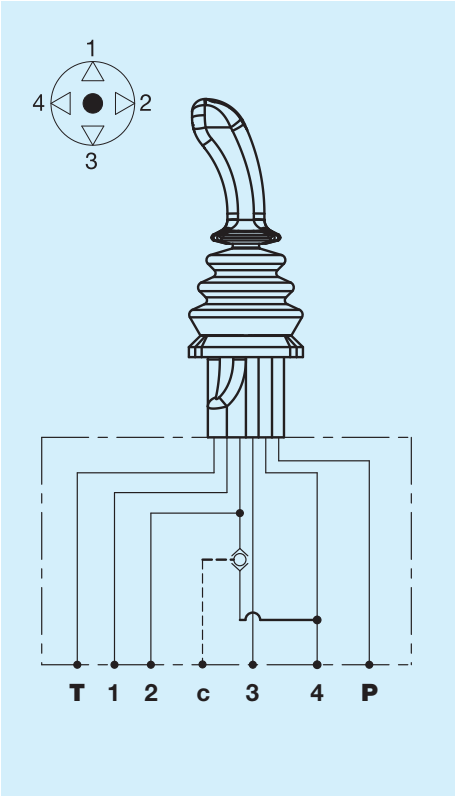

2 Two pressure signals from axis 1-3 and 2-4

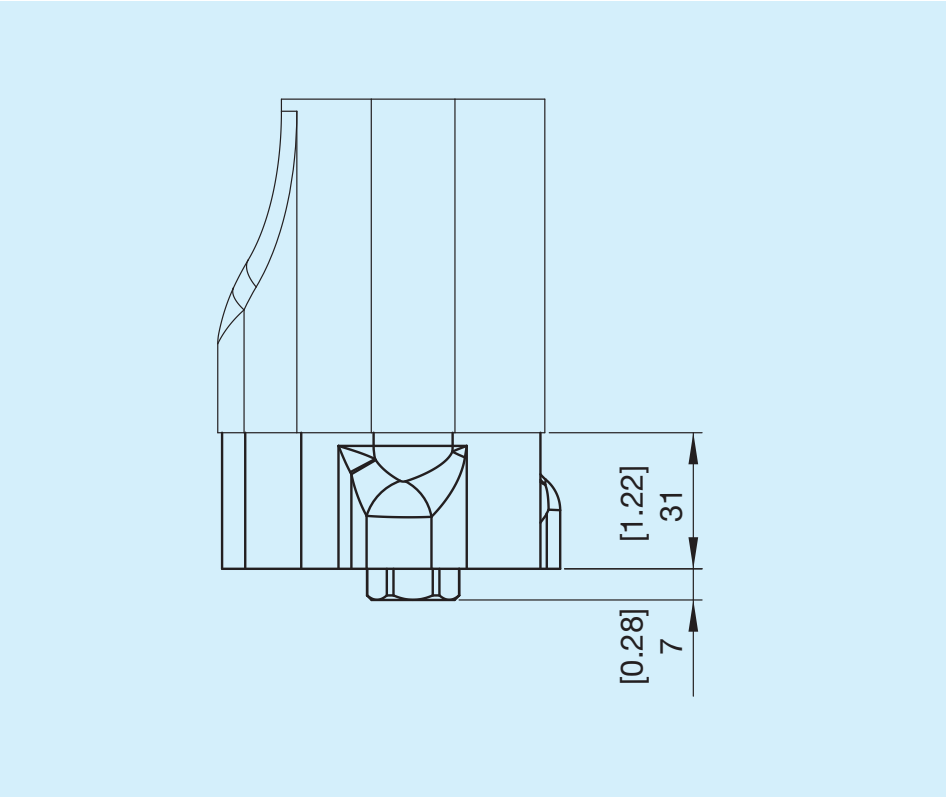

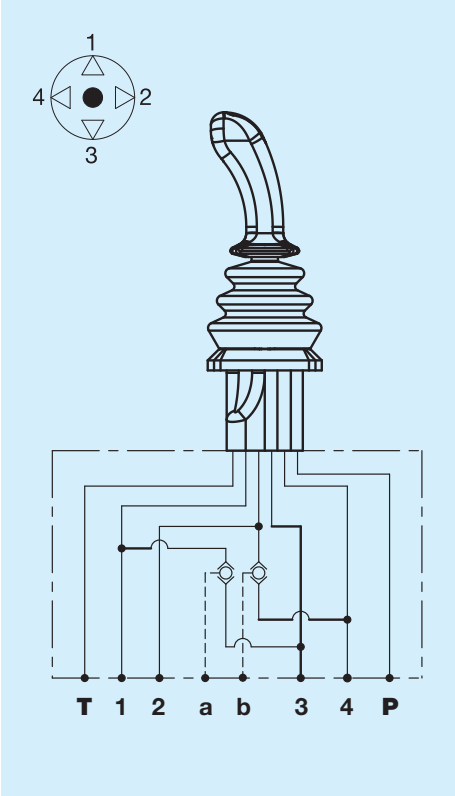

3 Opposite counter rotation

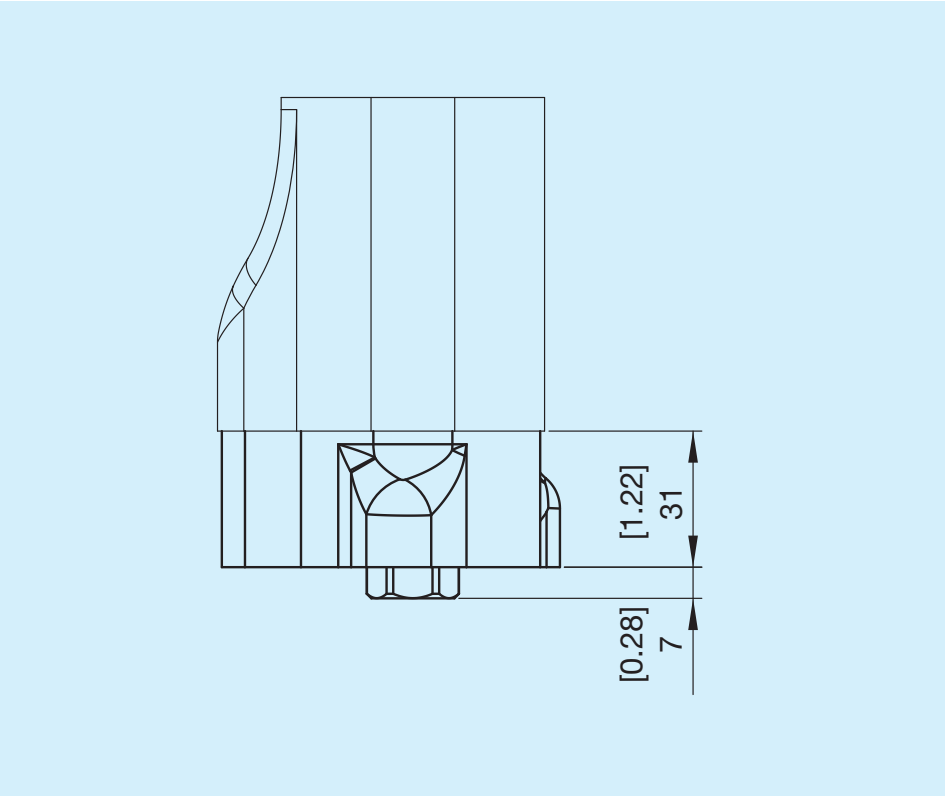

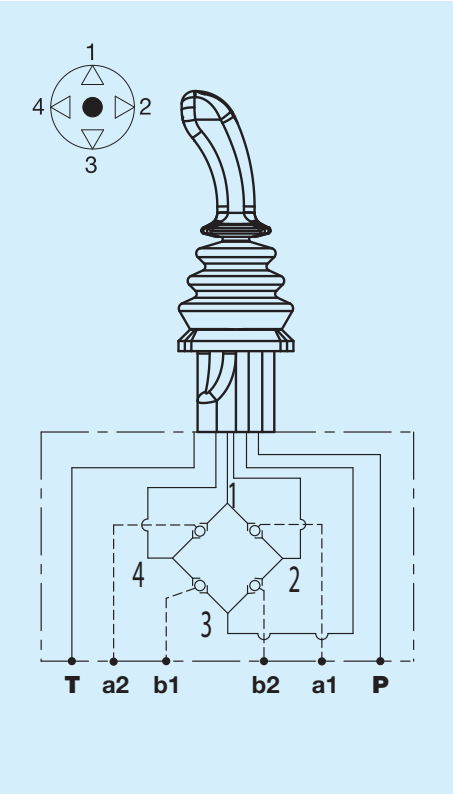

When reversing, the left and right turn is opposite to the inclination of the lever.

4 One pressure signal from each position

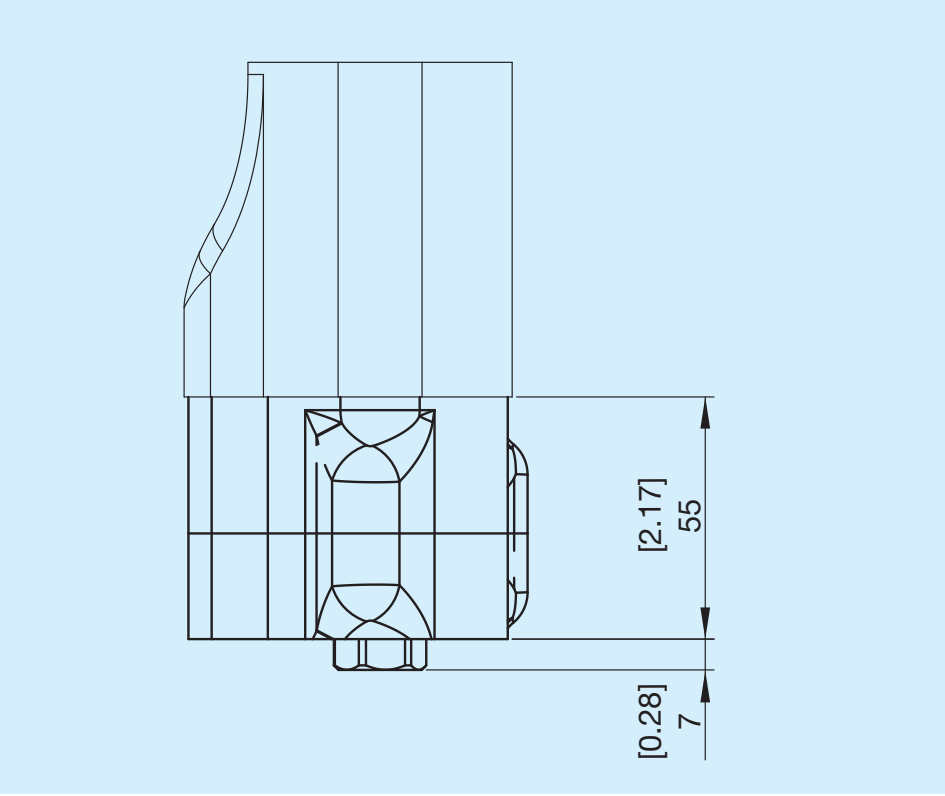

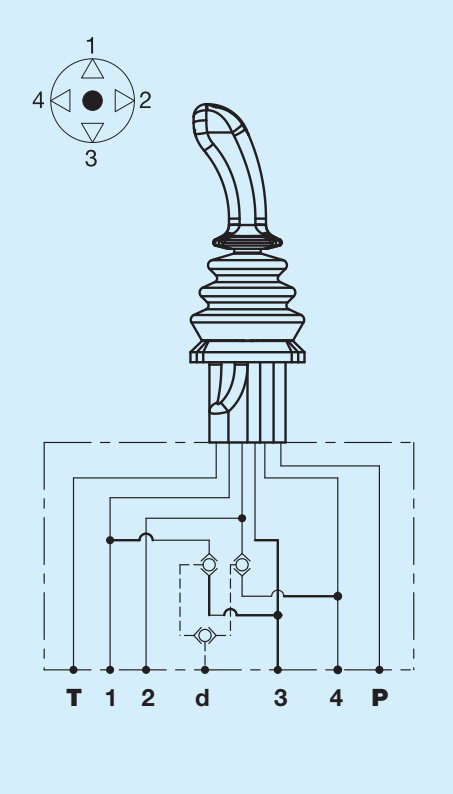

5 Opposite counter rotation with reverse signal

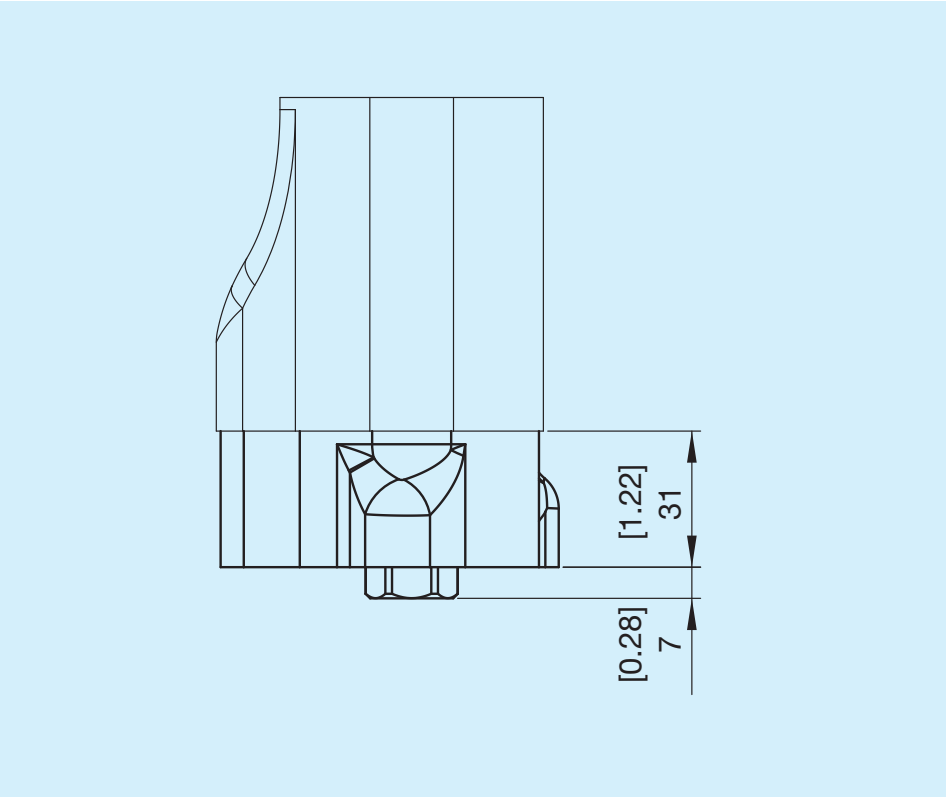

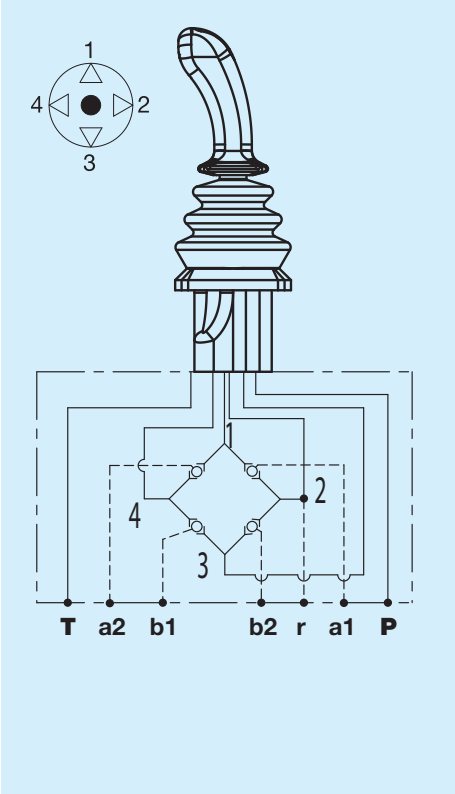

When reversing, the left and right turn is opposite to the inclination of the lever.

6 Concordant counter rotation

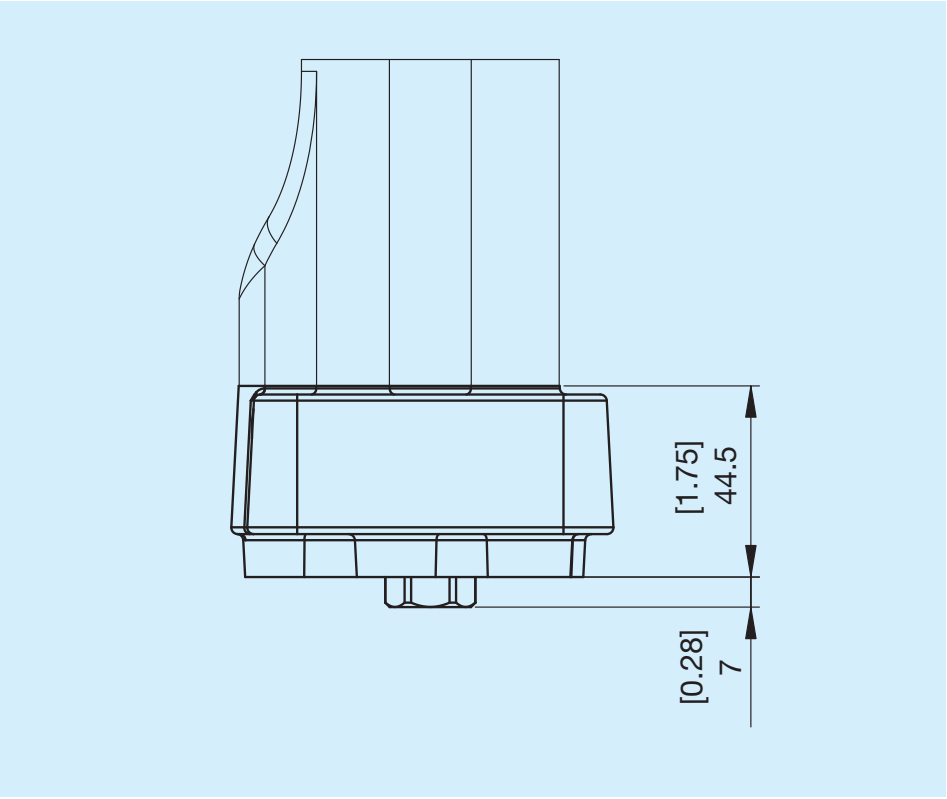

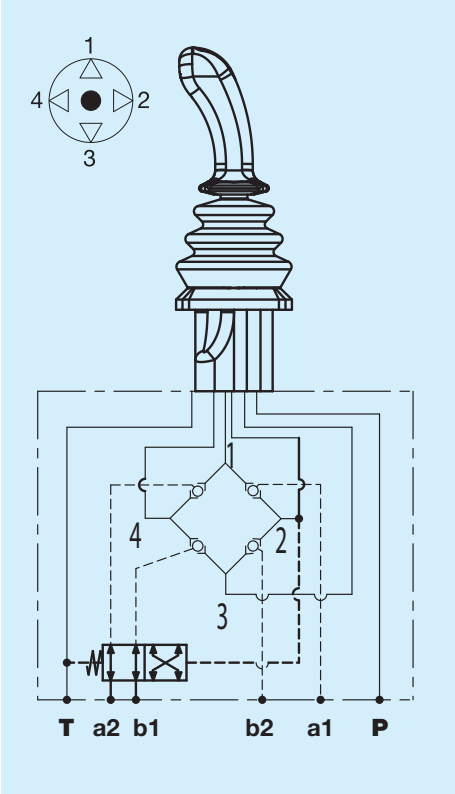

When reversing, the left and right turn is concordant to the inclination of the lever.

7 Concordant counter rotation and reverse signal

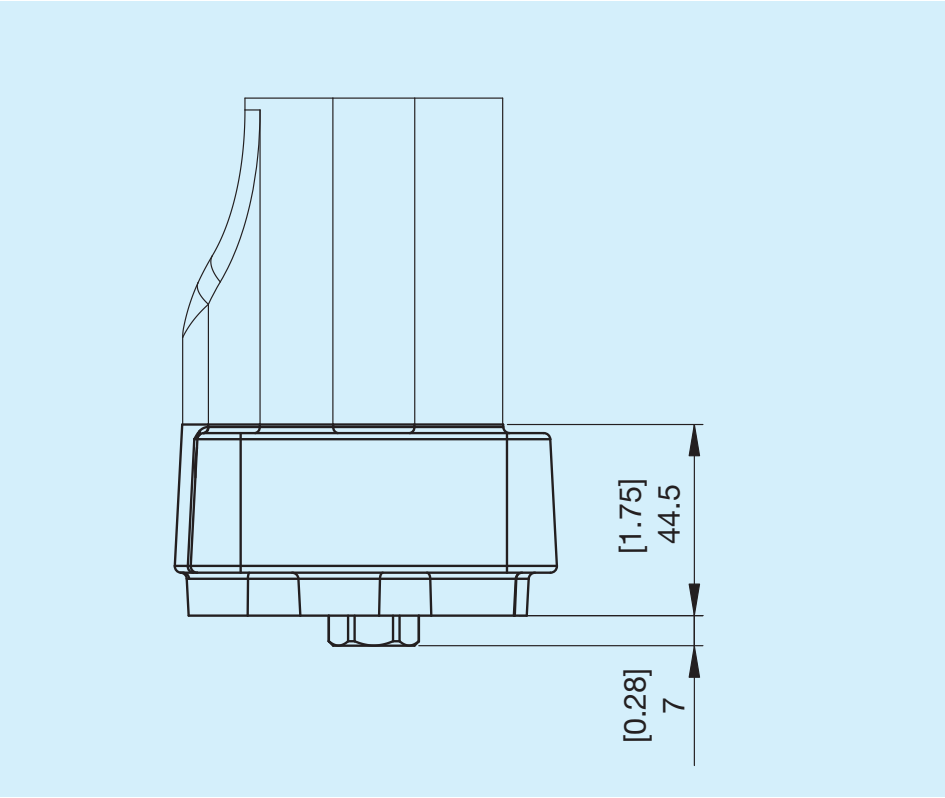

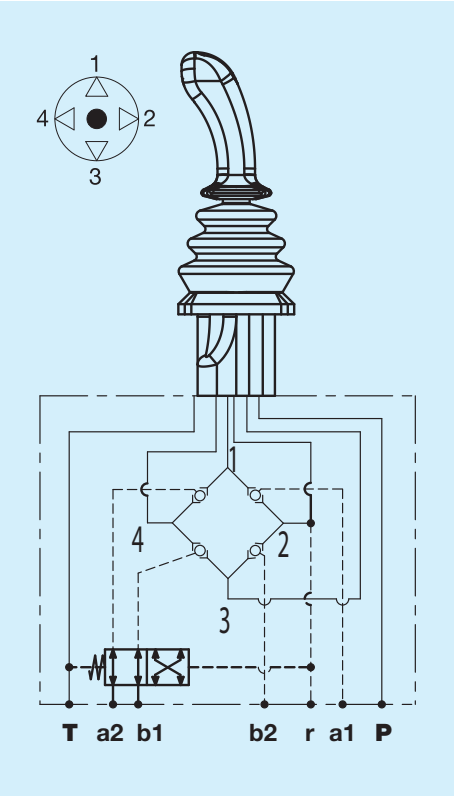

When reversing, the left and right turn is concordant to the inclination of the lever.

Type G2- U3

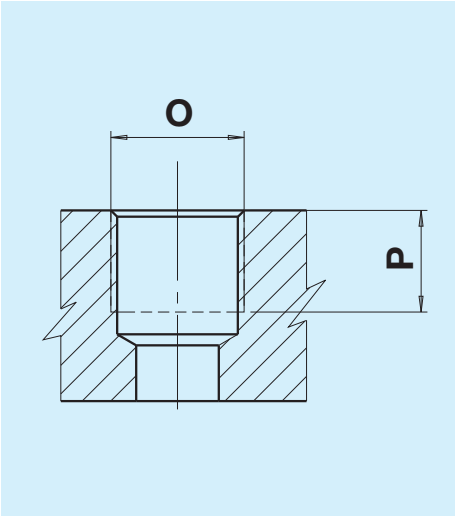

Type	O		P	
		Nm	**mm**	**in**
G2	1/4"	17	12	0.47
U3	9/16-18 UNF	25	13	0.47

S Anatomical

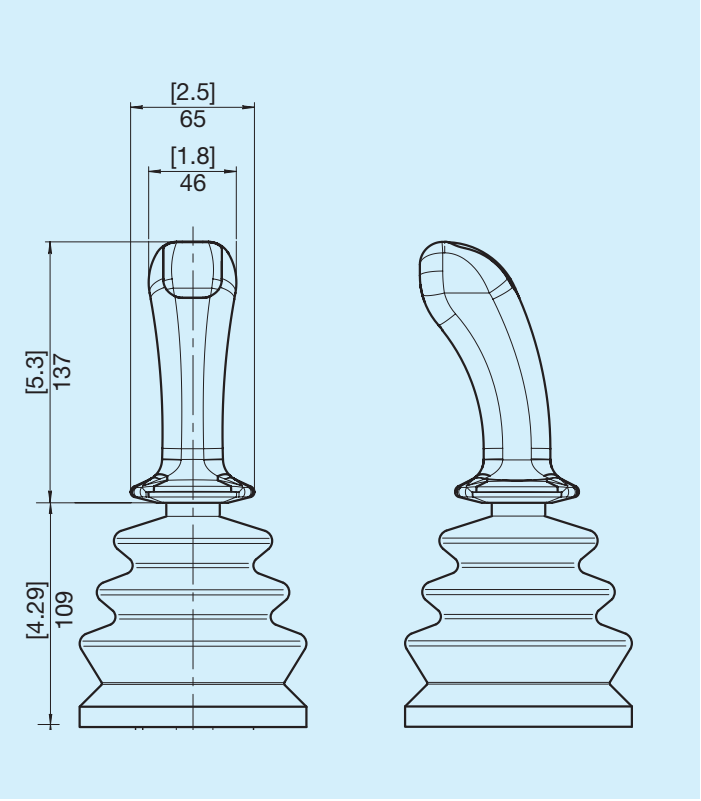

K Cylindrical

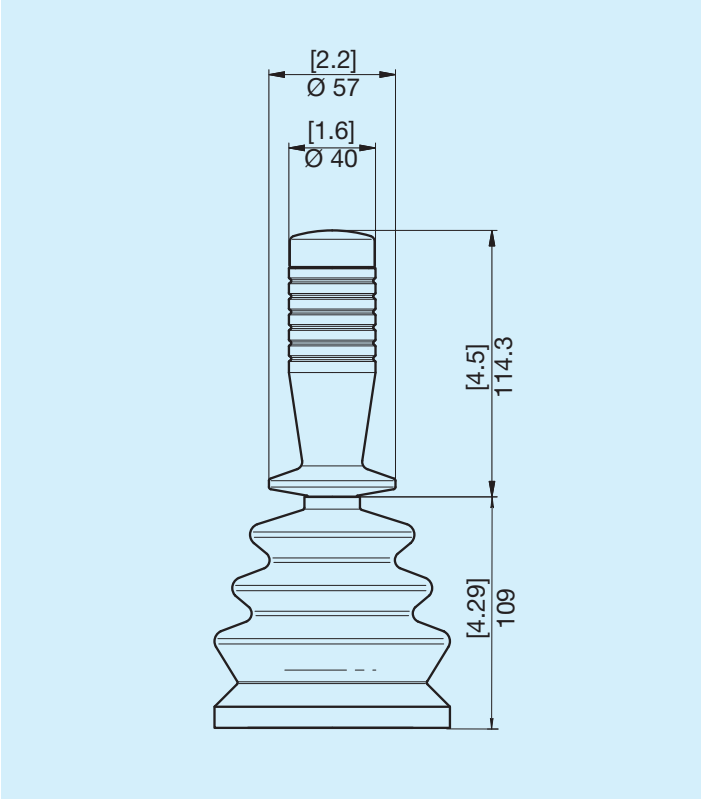

E Ergonomic

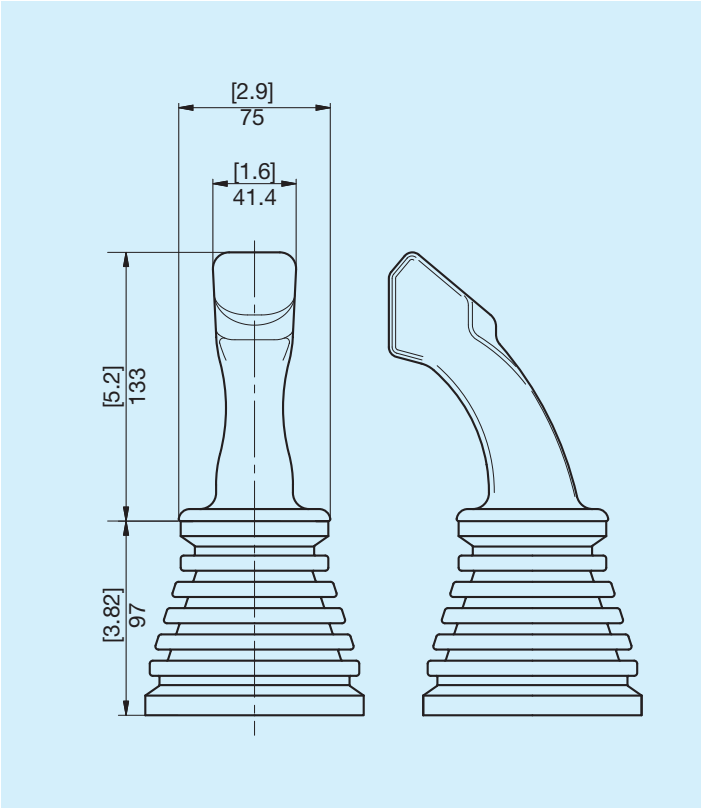

F Ergonomic deadman

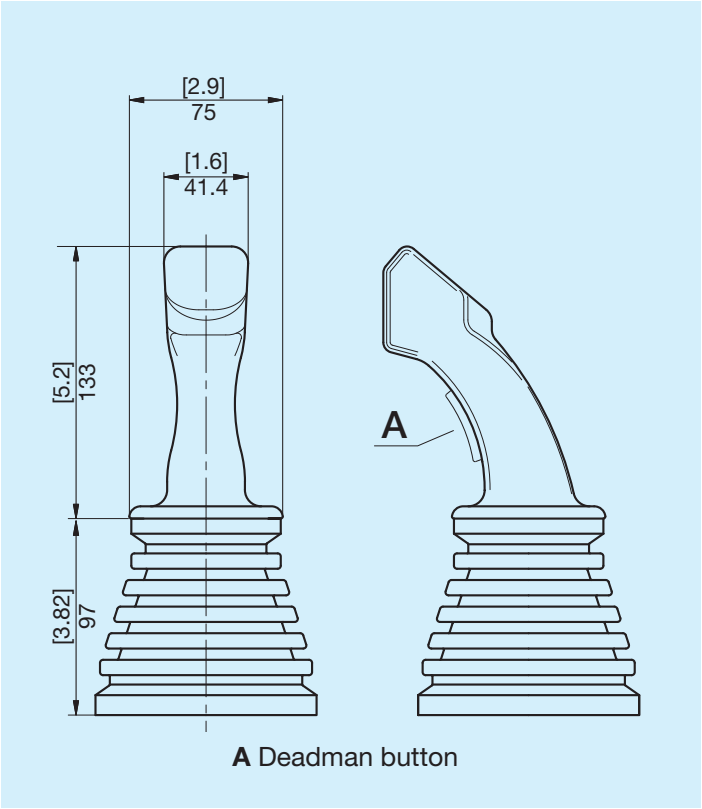

A Deadman button

T Multifunctional

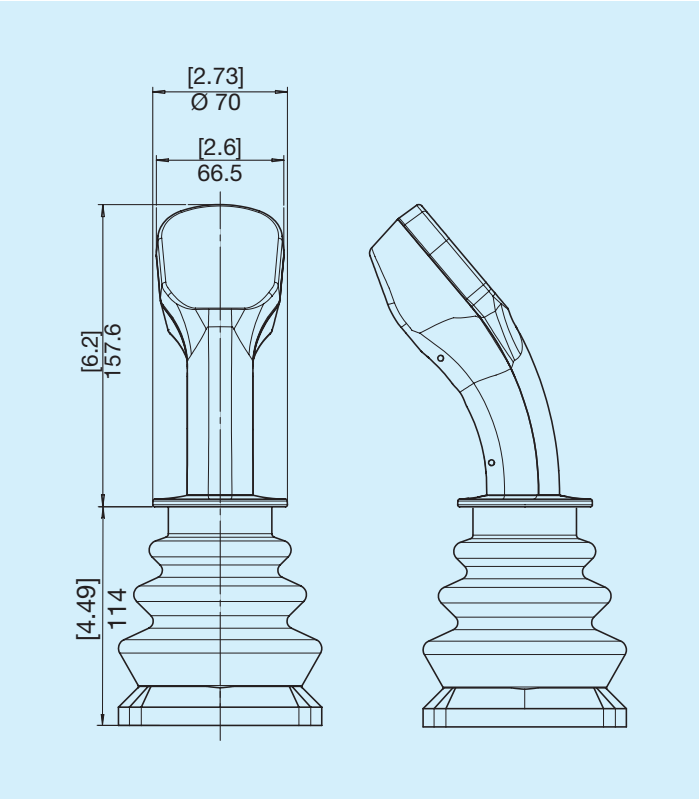

H Multifunctional Deadman

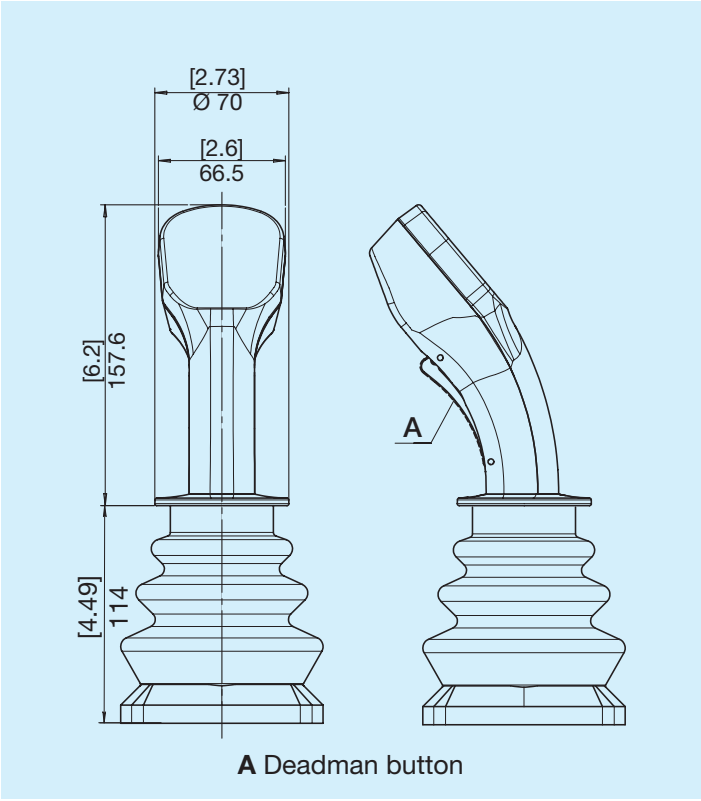

A Deadman button

V Multifunctional PWM

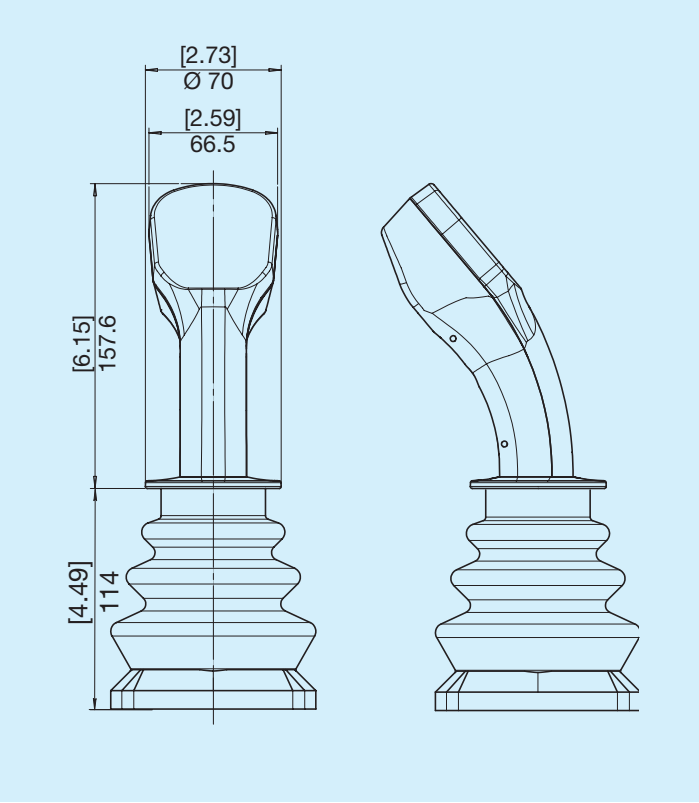

Power supply voltage 12 V	**9-16 Vdc effective**
Power supply voltage 24 V	**18-30 Vdc effective**
Maximum output current 1 channel	**3 A (@ 12 Vdc)** **2 A (@ 24 Vdc)**
Maximum output current Total	**6.5 A (@ 12 Vdc)** **4.5 A (@ 24 Vdc)**
PWM frequency	**100 - 400 Hz**
Standard configuration	**12 Vdc** **I max=1.5 A** **PWM = 200 Hz**
Handle protection level	**IP67**

* Soft current ramps, both increasing and decreasing and different output curves (current supplied according to the roller position

Z Multifunctional PWM Deadman

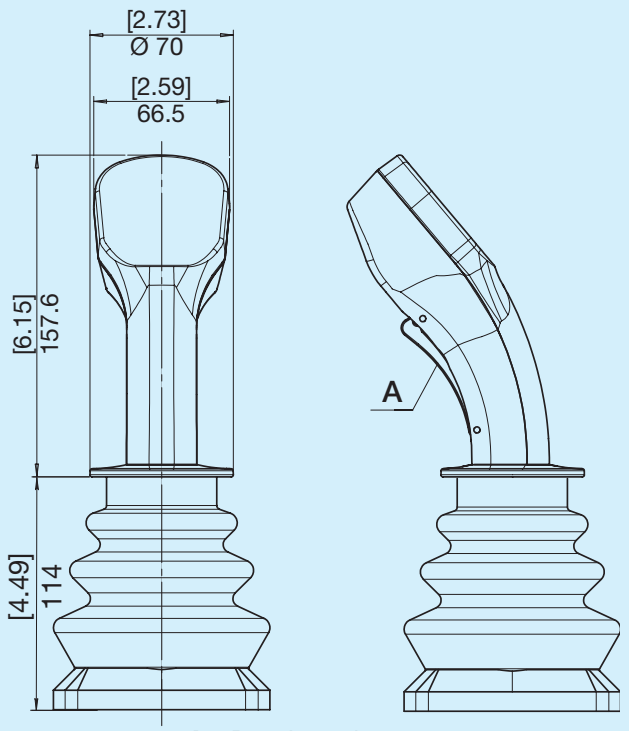

A - Deadman button

Power supply voltage 12 V	**9-16 Vdc effective**
Power supply voltage 24 V	**18-30 Vdc effective**
Maximum output current 1 channel	**3 A (@ 12 Vdc)** **2 A (@ 24 Vdc)**
Maximum output current Total	**6.5 A (@ 12 Vdc)** **4.5 A (@ 24 Vdc)**
PWM frequency	**100 - 400 Hz**
Standard configuration	**12 Vdc** **I max=1.5 A** **PWM = 200 Hz**
Handle protection level	**IP67**

* Soft current ramps, both increasing and decreasing and different output curves (current supplied according to the roller position

S With spring return to centre

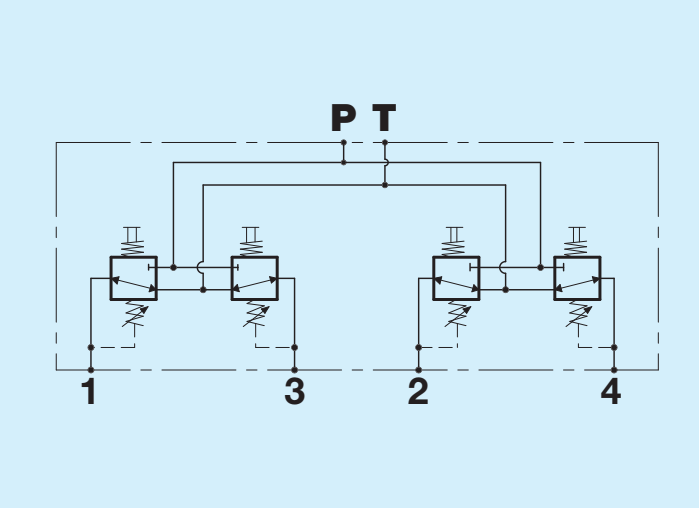

A Clutch controlled forward/back 2-4

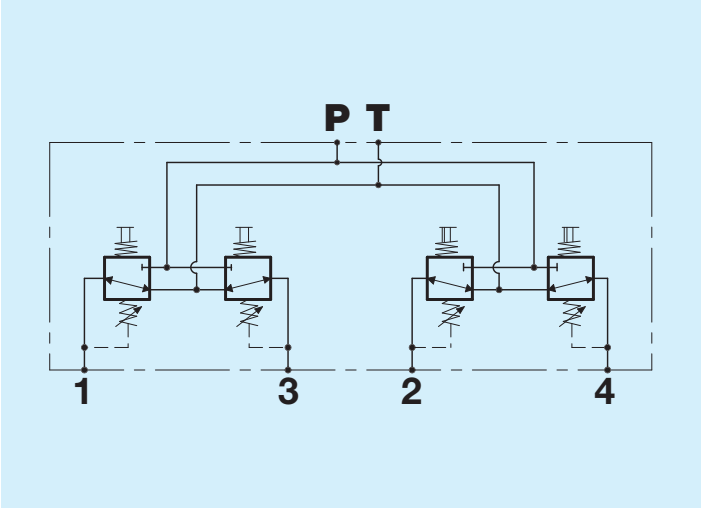

M Mechanical position 4

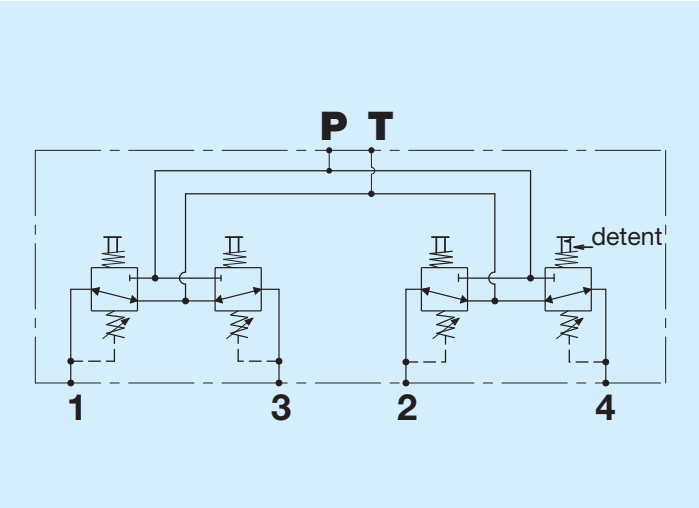

E Electromagnetic position 4 12 V

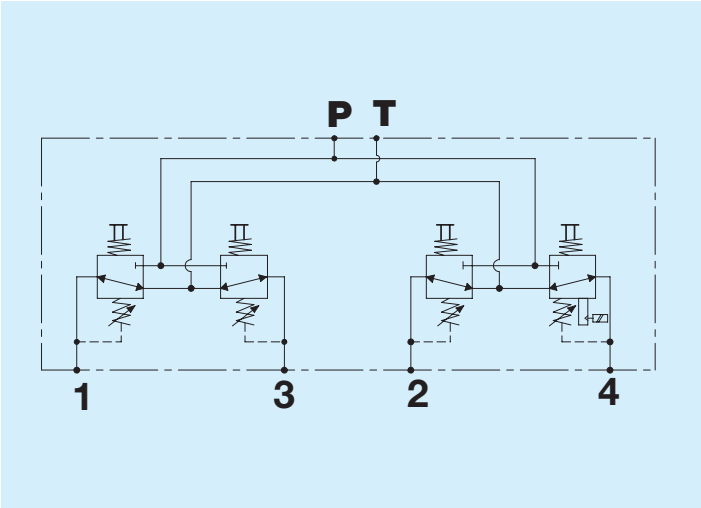

F Electromagnetic position 4 24 V

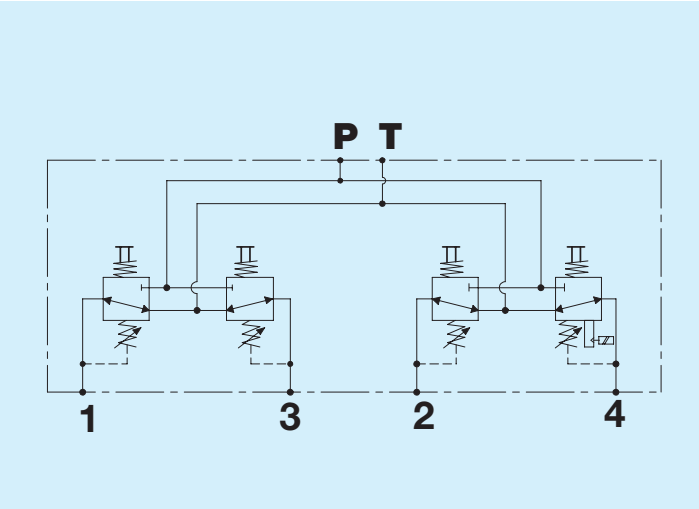

S.. Single ramp with step

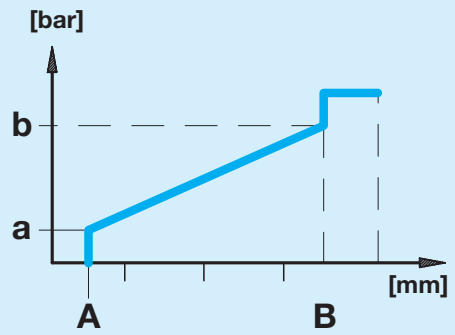

Stroke

Type	Pressure a		Pressure b	
	bar	psi	bar	psi
S00	2	29	16	232
S01	5	73	20	290
S02	6.5	94	24.5	355
S04	3	46	17	249
S08	5	73	16	232
S11	4	58	15	218
S12	1.5	22	7	102
S13	5	73	28	406

L.. Single ramp without step

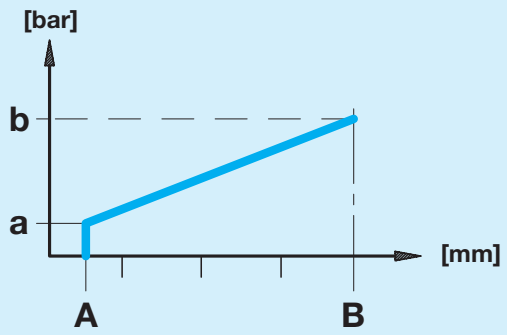

Stroke

Type	Pressure a		Pressure b	
	bar	psi	bar	psi
L00	2	29	18	261
L01	5	73	22	319
L02	6.5	94	26.5	384
L04	3	46	19	276
L08	5	73	18	261
L11	4	58	16	218
L12	1.5	22	9	131
L13	5	73	30	435

M60 Double ramp with step

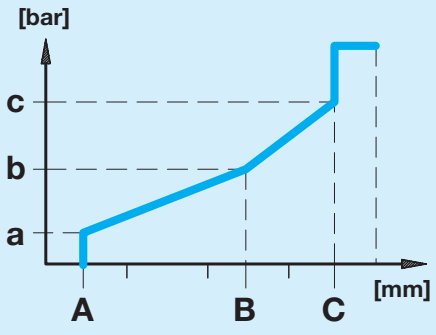

Stroke

Type	Pressure a		Pressure b		Pressure c		Stroke A	Stroke B	Stroke C
	bar	psi	bar	psi	bar	psi	mm	mm	mm
M60	5	73	12	174	21	306	1.2	5.4	7.8

BONDIOLI & PAVESI HP Hydraulic

Adjustment curve

G60 Double ramp without step

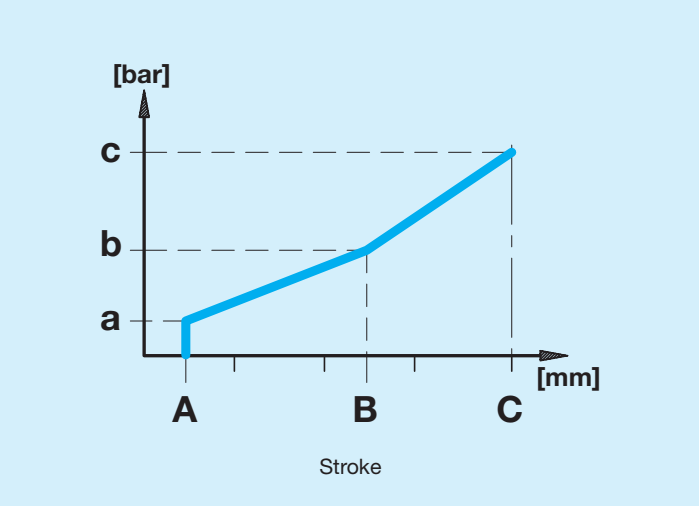

Type	Pressure a		Pressure b		Pressure c		Stroke		
	bar	psi	bar	psi	bar	psi	A mm	B mm	C mm
G60	5	73	12	174	23	334	1.2	5.4	8.3

Upper electric controls

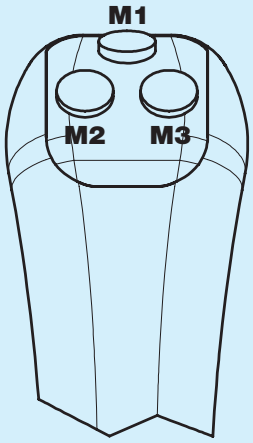

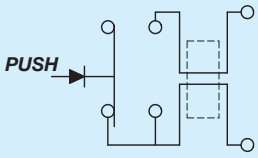

DC 12V x 2A

Configurations

Code	Description
00	No button
01	M1
02	M2+M3
03	M1+M2+M3

Front electric controls

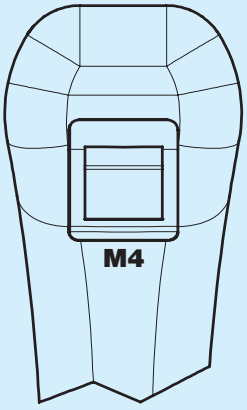

Rocker switch

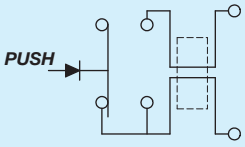

ON/OFF switch

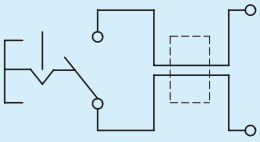

DC 12V x 2A

Configurations

Code	Description
0	No switch
1	M4 rocker with spring-back
2	M4 ON/OFF switch

0B Single top button with return

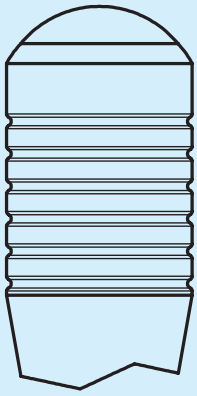

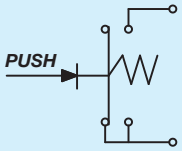

DC 12V x 8A

0C Rocker top button

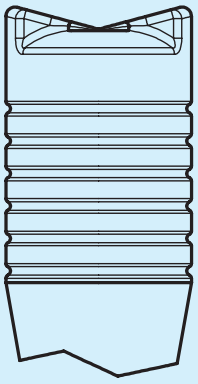

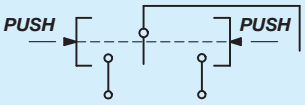

DC 12V x 8A

0D Stable top button

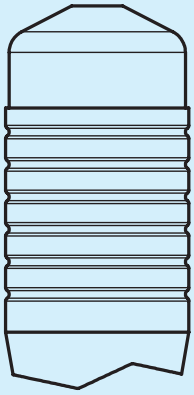

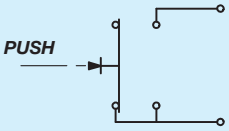

DC 28V x 10A resistive
DC 28V x 5A
Inductive

Front electric controls

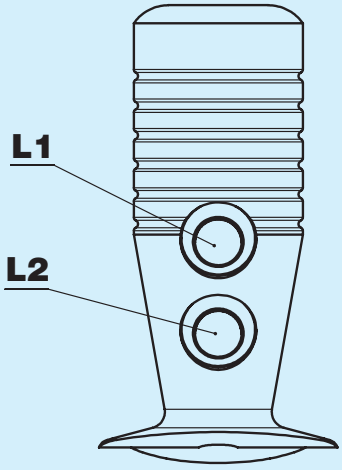

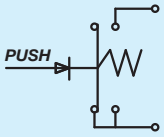

DC 28V x 5A resistive
DC 28V x 3A
Inductive

Configurations

Code	Description
0	No button
F	L1
G	L2
H	L1+L2

Upper electric controls

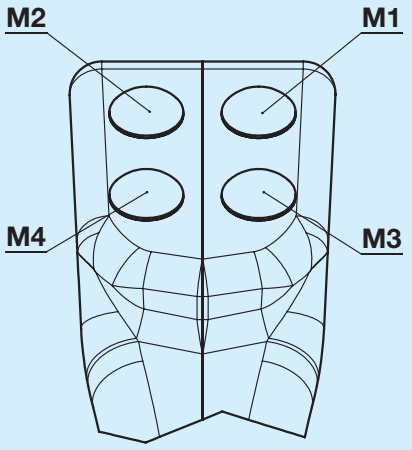

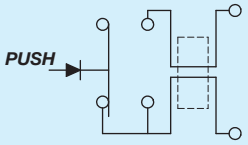

DC 12V x 4A resistive
DC 12V x 2A
Inductive

Configurations

Code	Description
00	No button
01	M1
02	M1+M2
03	M1+M2+M3
04	M1+M2+M3+M4
05	M2
06	M3+M4

Front electric controls

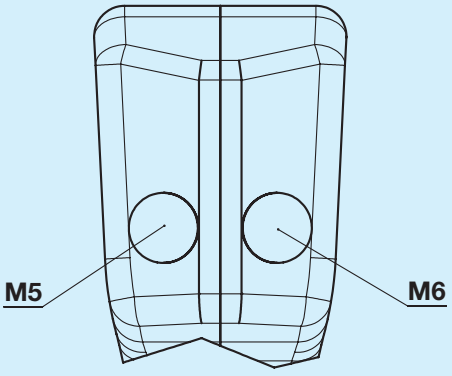

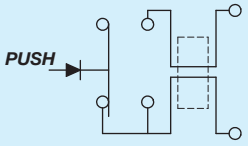

DC 12V x 4A resistive
DC 12V x 2A
Inductive

Configurations

Code	Description
0	No button
1	M5
2	M5+M6
3	M6

Upper electric controls

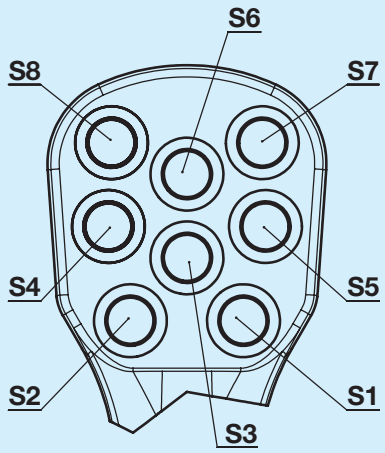

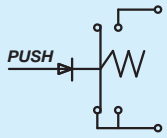

DC 28V x 5A resistive
DC 28V x 3A
Inductive

Configurations

Code	Description	Code	Description	Code	Description
00	No button	0C	S1+S2+S4+S5+S7+S8	0P	S1+S5+S7
01	S1	0D	S4+S8	0Q	S1+S2+S7+S8
02	S3	0E	S5	0R	S2+S4
03	S1+S2	0F	S4	0S	S3+S4+S5+S7+S8
04	S4+S5	0G	S5+S7	0T	S1+S7
05	S1+S2+S5	0H	S3+S4+S5+S6	0U	S3+S6
06	S1+S2+S4+S5	0I	S4+S5+S6	0V	S8
07	S1+S2+S3+S4+S5	0J	S1+S2+S3	0W	S2+S8
08	S1+S2+S3+S4+S5+S6	0K	S4+S5+S7+S8	0Y	S7+S8
09	S1+S2+S3+S4+S5+S7+S8	0L	S6	0Z	S1+S2+S6
0A	S1+S2+S3+S4+ S5+S6+S7+S8	0M	S1+S2+S4+S5+S6	1A	S2+S4+S8
0B	S3+S7+S8	0N	S3+S7		

Upper electric controls and Left Roller

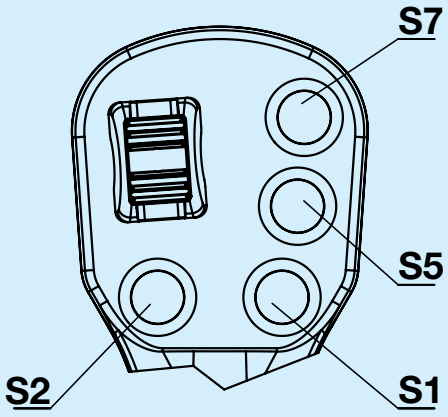

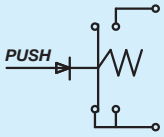

DC 28V x 5A resistive
DC 28V x 3A
Inductive

Configurations

Code	Description
RA	Left Roller
RB	Left Roller+S7
RC	Left Roller+S5+S7
RD	Left Roller+S1+S5+S7
RE	Left Roller+ S1+S2+S5+S7

Upper electric controls and Right Roller

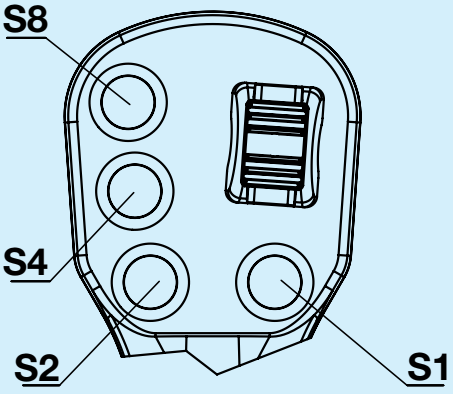

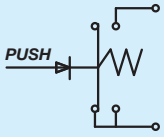

DC 28V x 5A resistive
DC 28V x 3A
Inductive

Configurations

Code	Description
RF	Right Roller
RG	Right Roller+S8
RH	Right Roller+S4+S8
RJ	Right Roller+S2+S4+S8
RK	Right Roller+S1+S2+S4+S8

Upper electric controls, Right Roller and Left Roller

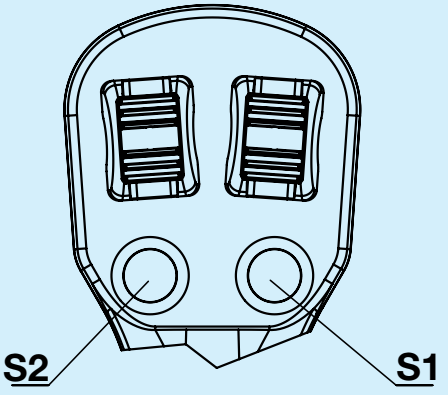

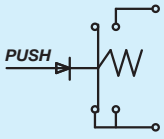

DC 28V x 5A resistive
DC 28V x 3A
Inductive

Configurations

Code	Description
RL	Right Roller+Left Roller
RM	Right Roller+ Left Roller+S2
RN	Right Roller+ Left Roller+S2+S1

BONDIOLI & PAVESI
HP Hydraulic

Upper electric controls and Roller Up

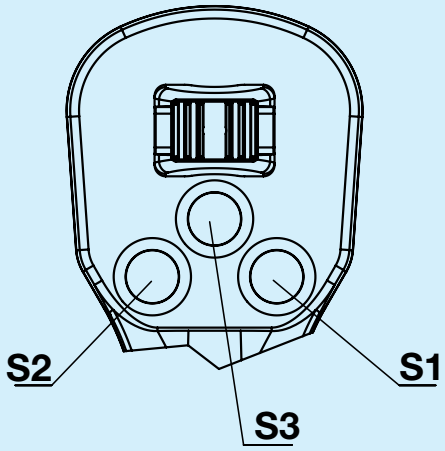

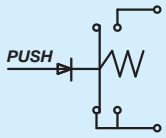

DC 28V x 5A resistive
DC 28V x 3A
Inductive

Configurations

Code	Description
RO	Roller Up+S1+S2
RP	Roller Up+S3
RR	Roller Up+S1+S2+S3

Roller Down

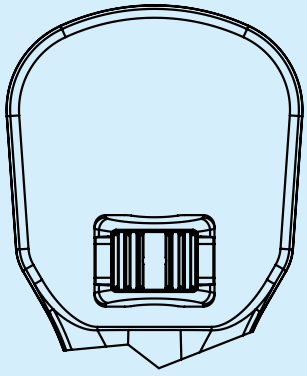

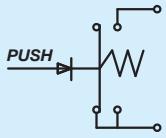

DC 28V x 5A resistive
DC 28V x 3A
Inductive

Configurations

Code	Description
RQ	Roller Down

Front electric controls

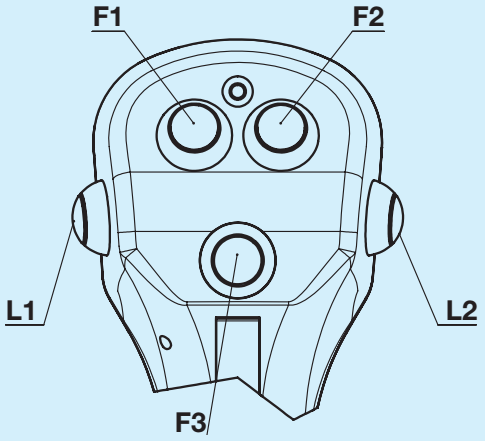

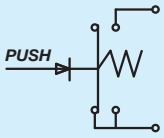

DC 28V x 5A resistive
DC 28V x 3A
Inductive

Configurations

Code	Description	Code	Description	Code	Description
0	No button	5	F2	A	F1+F2+L1+L2
1	L1	6	F3	B	F3+L1+L2
2	L2	7	F1+F2	C	F1+L1
3	L1+L2	8	F1+F2+F3	D	F1+F3
4	F1	9	F1+F2+F3+L1+L2	E	F1+F3+L1+L2

Front buttons are not foreseen for versions “V” and “Z”.

PWM output profile programming (A)

500 PWM output profile

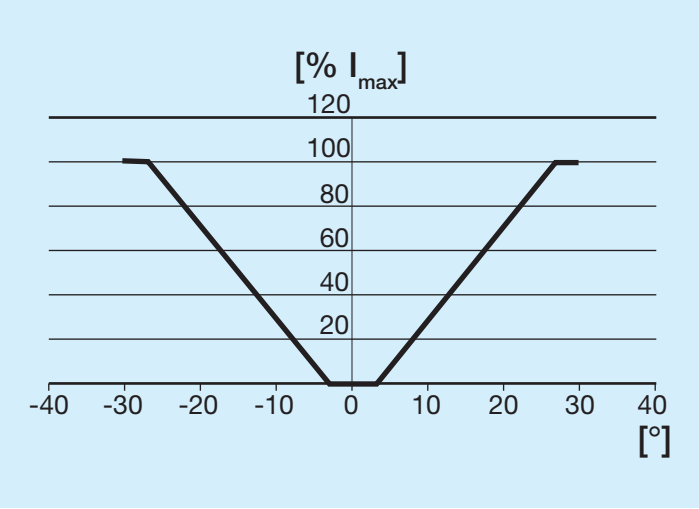

501 PWM output profile

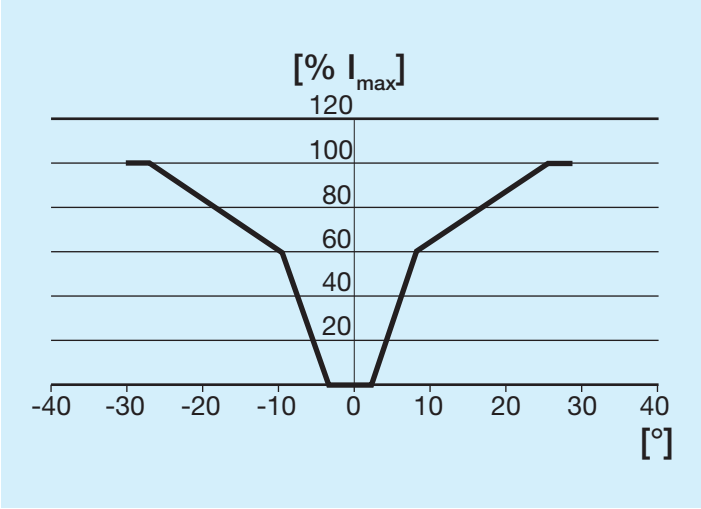

502 PWM output profile

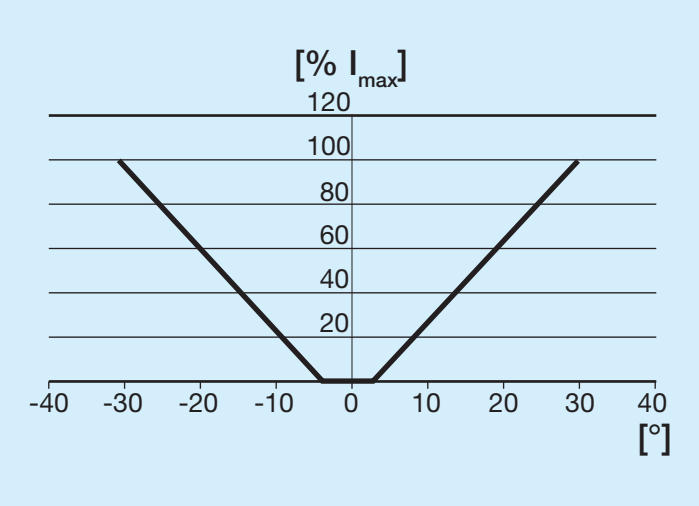

503 PWM output profile

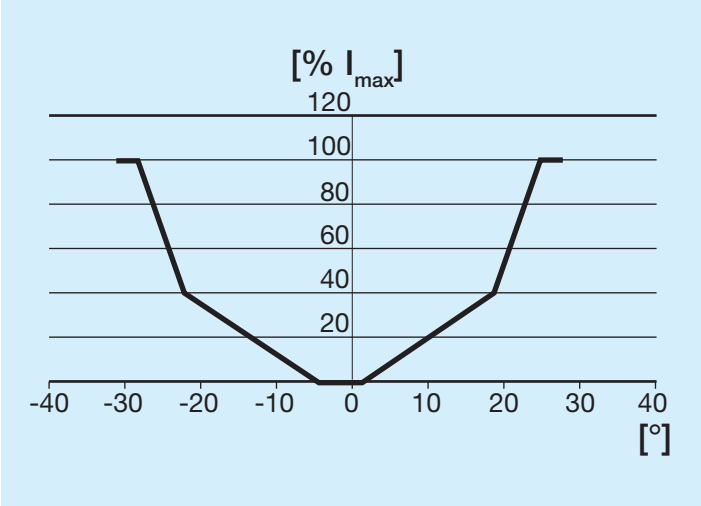

The programming of the electronic card, integrated in the H/T handle, is specific for each application as the ramp is designed to best meet the different working conditions. You will therefore have to ask HP Hydraulic to assign the 3-digit code once the application and the correct ramp has been agreed (current delivered, % I_{max}, depending on the roller position, degrees). Below are examples of ramps available to the standard configuration of the parameters of voltage, current and PWM frequency of the electronic board.

Ordering instructions

	1	2	3	4	5	6	7	8	9	10	11	12	13	14	15	16	17	18
HPCJ	**0**	**G**	**2**	**1**	**K**	**S**	**S**	**0**	**1**	**0**	**0**	**0**	**0**	**0**	**0**	**0**	**0**	**0**

1 — Models

1	1 pressure signal from axis 2-4	**3**	Opposite counter rotation	**5**	Opposite counter rotation with reverse signal	**7**	Concordant counter rotation with reverse signal
2	2 pressure signals from axis 1-3 and 2-4	**4**	1 pressure signal from each position	**6**	Concordant counter rotation		

2 3 — Ports

G2	1/4” gas-BSPP	**U3**	SAE 9/16”-18UNF

4 — Seals

1	NBR	**2**	Viton

5 — Grips

0	Without handle	**E**	Ergonomic	**H**	Multifunctional Deadman
S	Anatomical	**F**	Ergonomic deadman	**V**	Multifunctional PWM output
K	Cylindrical	**T**	Multifunctional	**Z**	Multifunctional PWM output Deadman

6 — Positioner

S	With spring return to centre	**M**	Mechanical position 4	**F**	Electromagnetic position 4 24 V
A	Clutch controlled forward/ back 2-4	**E**	Electromagnetic position 4 12 V		

7 8 9 — Adjustment curve

S	Single ramp with step	**M**	Double ramp with step
L	Single ramp without step	**G**	Double ramp without step

10 11 — Upper electric controls

00	No button	**...**	See upper electric controls

12 — Front electric controls

0	No switch	**...**	See front electric controls

13 14 15 — Special versions

000	No special execution	**001**	Lever inclined right by 15°	**002**	Lever inclined left by 15°

16 17 18 — PWM output profile programming (A)

000	No PWM signal	**501**	PWM output profile	**503**	PWM output profile
500	PWM output profile	**502**	PWM output profile		