A48

Before using the heat exchanger, carefully read the document entitled GENERAL INSTRUCTIONS FOR HEAT EXCHANGER USE.

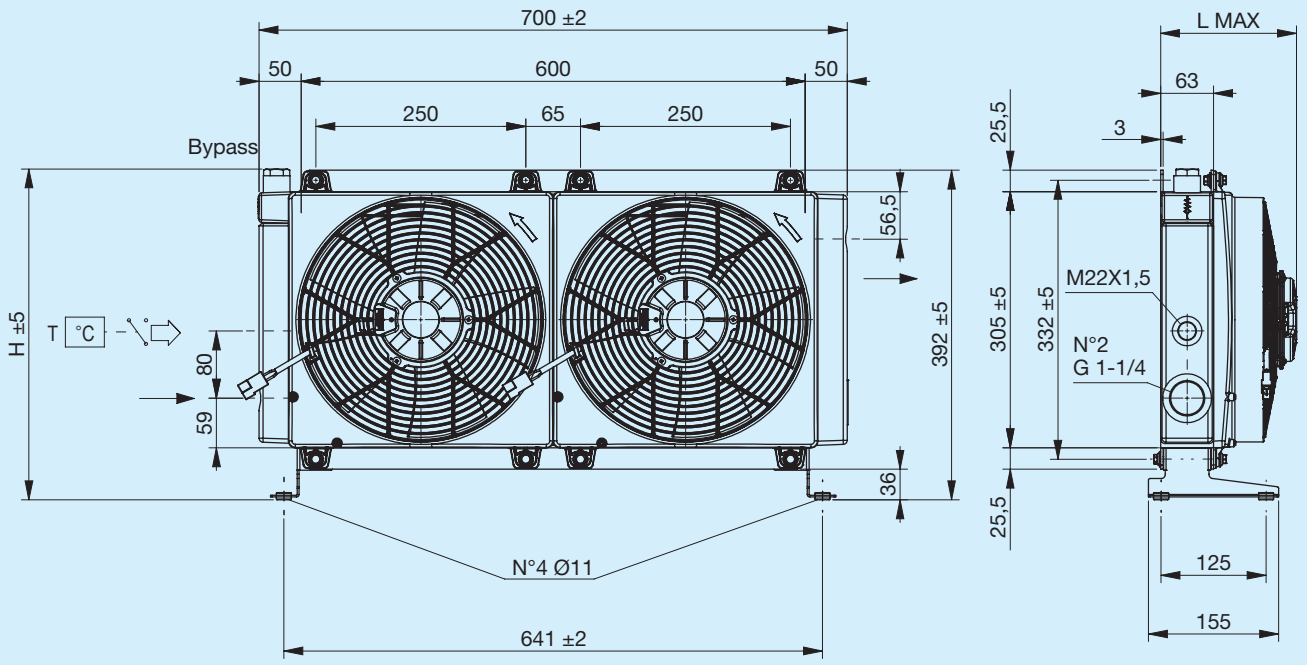

Support foot not included (see Accessories)

Code	Description	ΦFan mm	Air flow rate m³/h	Voltage V	Current A	L Max mm	H mm	Weight Kg	Capacity l
FR633213105	**A48 2EAX 12V bypass T15 V.T. 3 bar 60°C**	2X280	2X2350	12	2X12.5	200	391	16	3.2
FR633213106	**A48 2ESX 12V bypass T15 V.T. 3 bar 60°C**	2X280	2X2350	12	2X12.5	200	391	16	3.2
FR633211003	**A48 2EAP 12V bypass T15 VNR 4.5 bar**	2X280	2X1420	12	2X8.7	160	375	16	3.2
FR633211005	**A48 2EAX 12V bypass T15 VNR 4.5 bar**	2X280	2X2350	12	2X12.5	200	375	16	3.2
FR633211006	**A48 2ESX 12V bypass T15 VNR 4.5 bar**	2X280	2X2350	12	2X12.5	200	375	16	3.2
FR633213115	**A48 2EAX 24V bypass T15 V.T. 3 bar 60°C**	2X280	2X2500	24	2X7.2	200	391	16	3.2
FR633213116	**A48 2ESX 24V bypass T15 V.T. 3 bar 60°C**	2X280	2X2500	24	2X7.2	200	391	16	3.2
FR633211015	**A48 2EAX 24V bypass T15 VNR 4.5 bar**	2X280	2X2500	24	2X7.2	200	375	16	3.2
FR633211016	**A48 2ESX 24V bypass T15 VNR 4.5 bar**	2X280	2X2500	24	2X7.2	200	375	16	3.2
FR633210003	**A48 2EAP 12V**	2X280	2X1420	12	2X8.7	160	391	13.5	3.2
FR633210004	**A48 2ESP 12V**	2X280	2X1420	12	2X8.7	160	391	13.5	3.2
FR633210005	**A48 2EAX 12V**	2X280	2X2350	12	2X12.5	200	391	16	3.2
FR633210006	**A48 2ESX 12V**	2X280	2X2350	12	2X12.5	200	391	16	3.2
FR633210013	**A48 2EAP 24V**	2X280	2X1600	24	2X4.7	160	391	13.5	3.2
FR633210014	**A48 2ESP 24V**	2X280	2X1600	24	2X4.7	160	391	13.5	3.2
FR633210015	**A48 2EAX 24V**	2X280	2X2500	24	2X7.2	200	391	16	3.2
FR633210016	**A48 2ESX 24V**	2X280	2X2500	24	2X7.2	200	391	16	3.2

Characteristic curves

Heat exchange (thermal) capacity

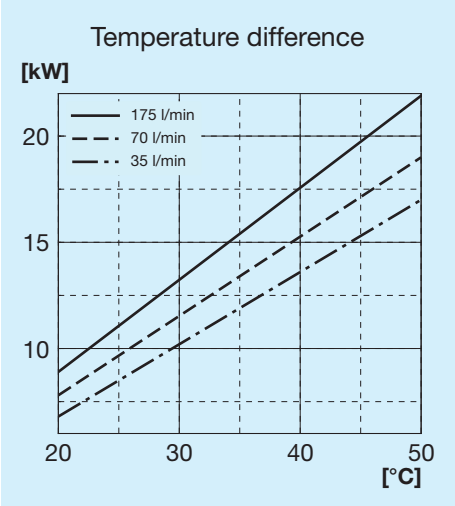

Radiator passage pressure drop

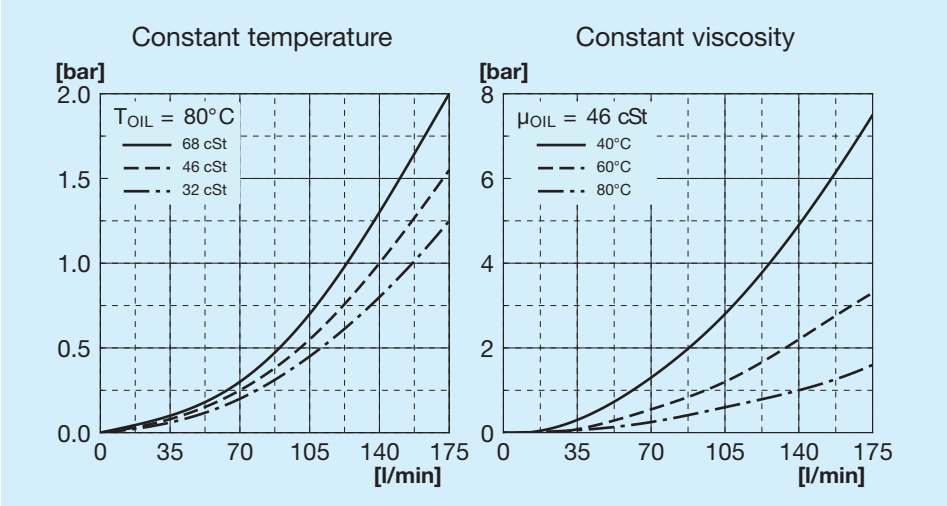

Bypass passage load loss

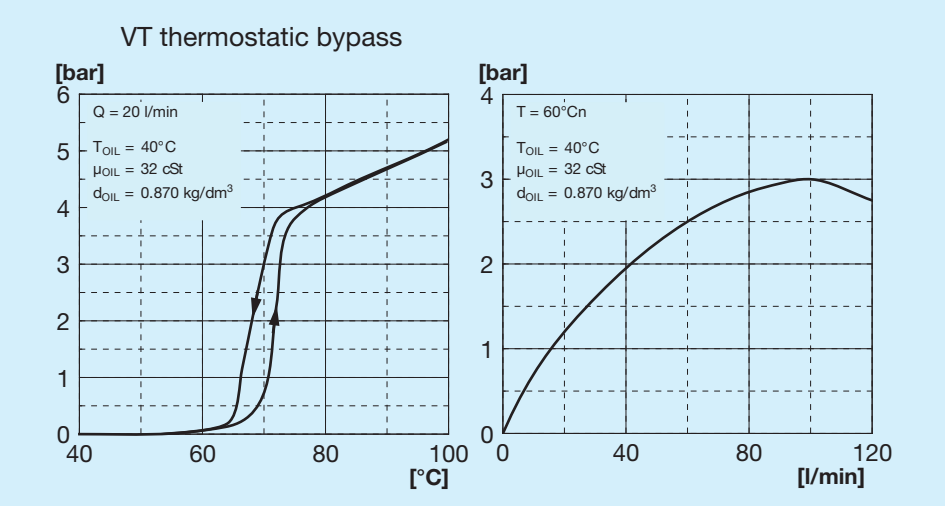

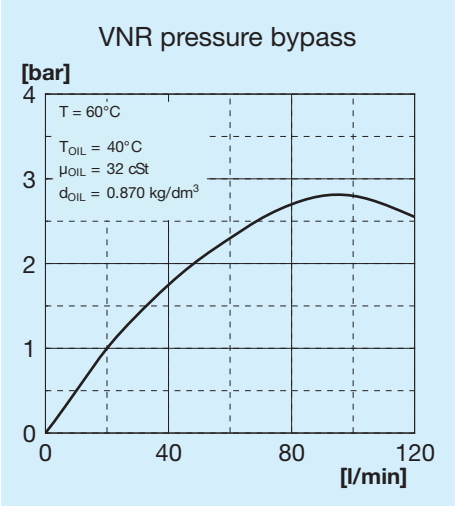

Bypass valves

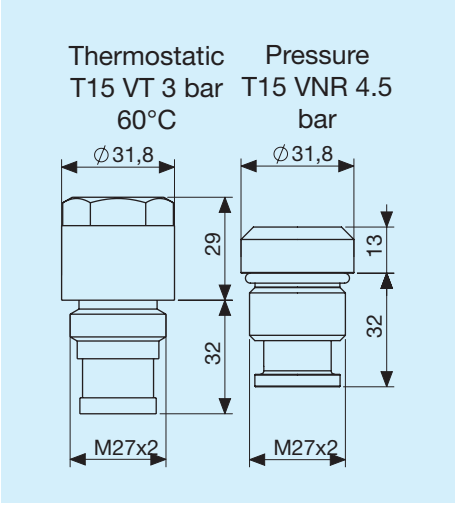

Legend

A48	Exchanger type
2E	2 Solenoid valves
A	Aspirating
S	Blowing
AP	High power aspirating
SP	High power blower
AX	Extra high power aspirating
SX	Extra high power blower
12V	Fan unit voltage
24V	Fan unit voltage
T15 VT	Thermostatic bypass valve 3 bar 60°C
T15 VNR	Pressure bypass valve at 4.5 bar

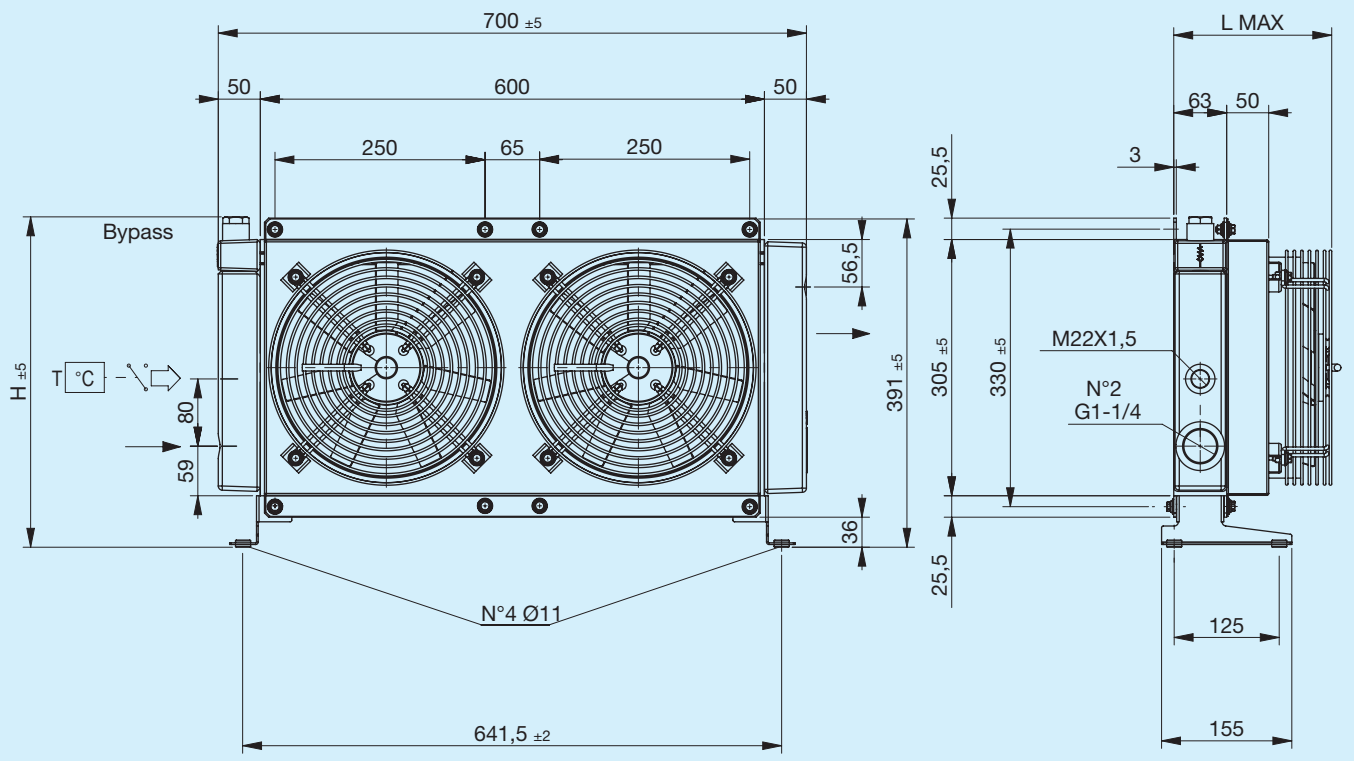

Support foot not included (see Accessories)

Code	Description	ΦFan	Power	Frequency	Speed	Protection	L Max	H	Weight	Capacity
		mm	W	Hz	min-¹	IP	mm	mm	Kg	l
FR633213131	**A48 2EA 230V bypass T15 V.T. 3 bar 60°C**	2X250	150	50 60	2450 2600	44	188	391	14	3.2
FR633213132	**A48 2ES 230V bypass T15 V.T. 3 bar 60°C**	2X250	150	50 60	2450 2600	44	188	391	14	3.2
FR633211031	**A48 2EA 230V bypass T15 VNR 4.5 bar**	2X250	150	50 60	2450 2600	44	188	375	14	3.2
FR633211032	**A48 2ES 230V bypass T15 VNR 4.5 bar**	2X250	150	50 60	2450 2600	44	188	375	14	3.2
FR633213121	**A48 2EA 400V bypass T15 V.T. 3 bar 60°C**	2X250	140	50 60	2500 2650	44	188	391	14	3.2
FR633213122	**A48 2ES 400V bypass T15 V.T. 3 bar 60°C**	2X250	140	50 60	2500 2650	44	188	391	14	3.2
FR633211021	**A48 2EA 400V bypass T15 VNR 4.5 bar**	2X250	140	50 60	2500 2650	44	188	375	14	3.2
FR633211022	**A48 2ES 400V bypass T15 VNR 4.5 bar**	2X250	140	50 60	2500 2650	44	188	375	14	3.2
FR633210031	**A48 2EA 230V**	2X250	150	50 60	2450 2600	44	188	391	14	3.2
FR633210032	**A48 2ES 230V**	2X250	150	50 60	2450 2600	44	188	391	14	3.2
FR633210021	**A48 2EA 400V**	2X250	140	50 60	2500 2650	44	188	391	14	3.2
FR633210022	**A48 2ES 400V**	2X250	140	50 60	2500 2650	44	188	391	14	3.2

Heat exchange (thermal) capacity

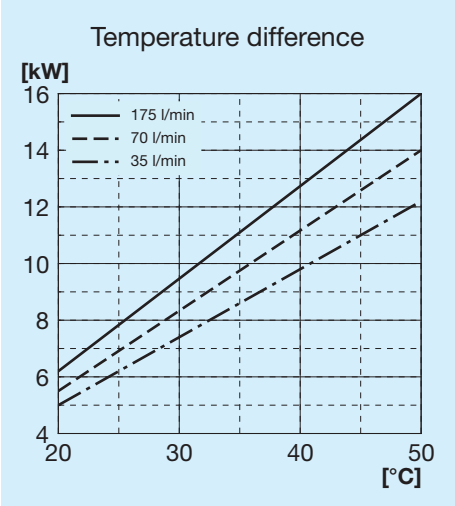

Radiator passage pressure drop

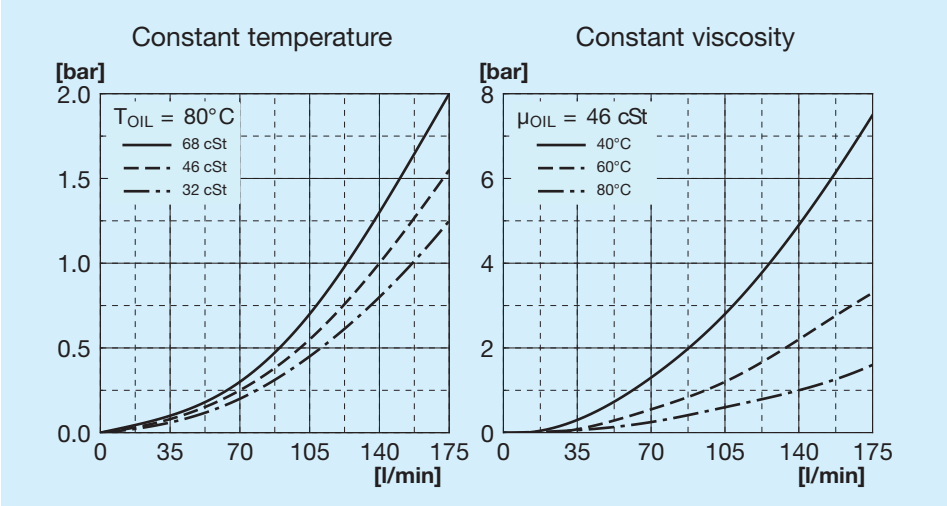

Bypass passage load loss

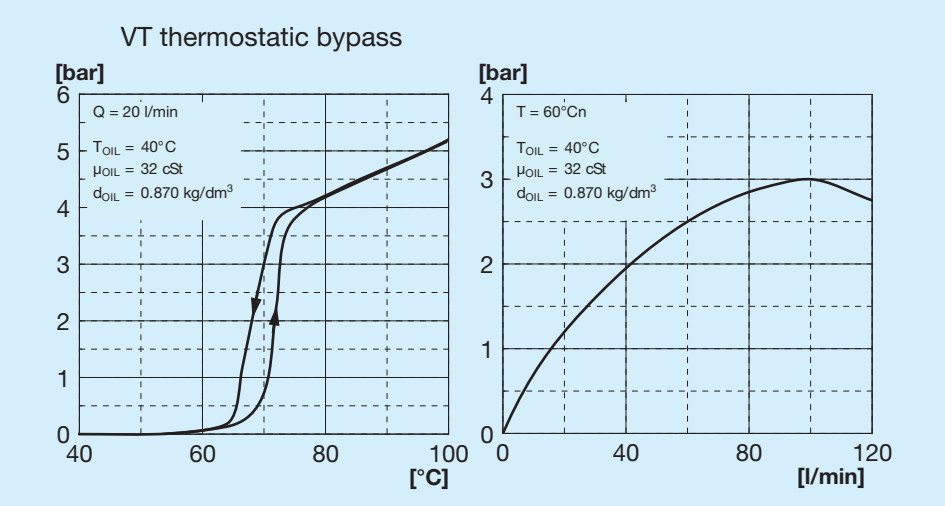

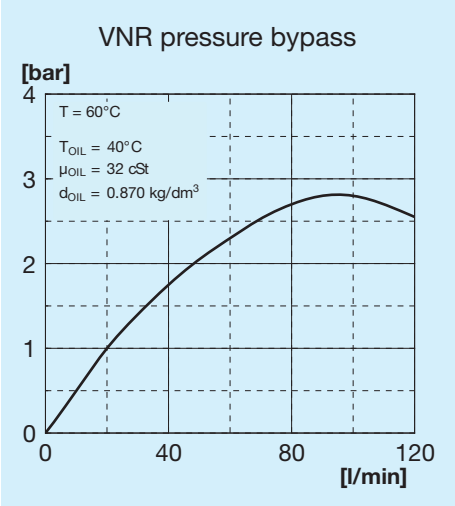

Bypass valves

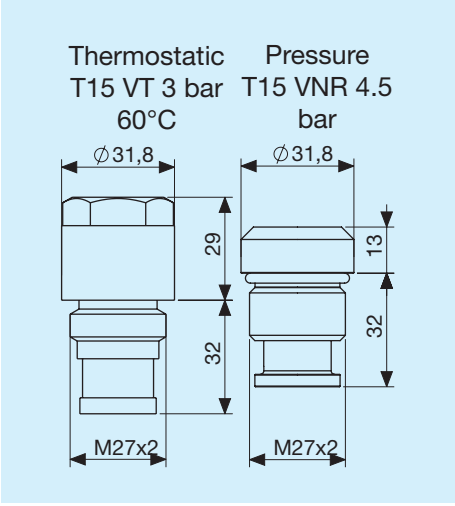

Legend

A48	Exchanger type
2E	2 Solenoid valves
A	Aspirating
S	Blowing
230V	Fan unit voltage
400V	Fan unit voltage
T15 VT	Thermostatic bypass valve 3 bar 60°C
T15 VNR	Pressure bypass valve at 4.5 bar

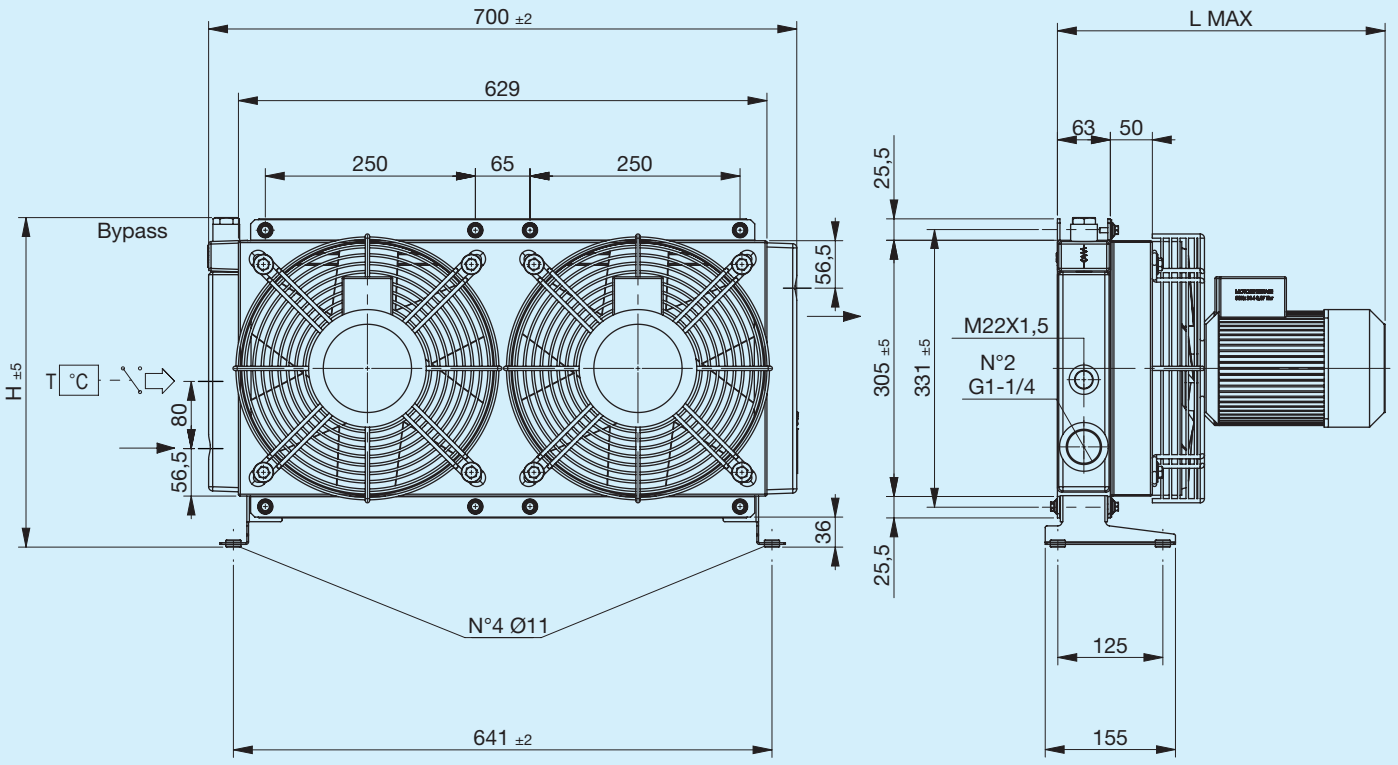

Support foot not included (see Accessories)

Code	Description	ΦFan	Power	Frequency	Speed	Protection	L Max	H	Weight	Capacity
		mm	W	Hz	min-¹	IP	mm	mm	Kg	l
FR633213141	**A48 2EA 230V-B14 bypass T15 V.T. 3 bar 60°C**	2X290	370	50	2790	65	390	391	23	3.2
FR633213142	**A48 2ES 230V-B14 bypass T15 V.T. 3 bar 60°C**	2X290	370	50	2790	65	390	391	23	3.2
FR633211041	**A48 2EA 230V-B14 bypass T15 VNR 4.5 bar**	2X290	370	50	2790	65	390	375	23	3.2
FR633211042	**A48 2ES 230V-B14 bypass T15 VNR 4.5 bar**	2X290	370	50	2790	65	390	375	23	3.2
FR633213151	**A48 2EA 400V-B14 bypass T15 V.T. 3 bar 60°C**	2X290	370	50	2790	65	390	391	23	3.2
FR633213152	**A48 2ES 400V-B14 bypass T15 V.T. 3 bar 60°C**	2X290	370	50	2790	65	390	391	23	3.2
FR633211051	**A48 2EA 400V-B14 bypass T15 VNR 4.5 bar**	2X290	370	50	2790	65	390	375	23	3.2
FR633211052	**A48 2ES 400V-B14 bypass T15 VNR 4.5 bar**	2X290	370	50	2790	65	390	375	23	3.2
FR633210041	**A48 2EA 230V-B14**	2X290	370	50	2790	65	390	391	23	3.2
FR633210042	**A48 2ES 230V-B14**	2X290	370	50	2790	65	390	391	23	3.2
FR633210051	**A48 2EA 400V-B14**	2X290	370	50	2790	65	390	391	23	3.2
FR633210052	**A48 2ES 400V-B14**	2X290	370	50	2790	65	390	391	23	3.2

Heat exchange (thermal) capacity

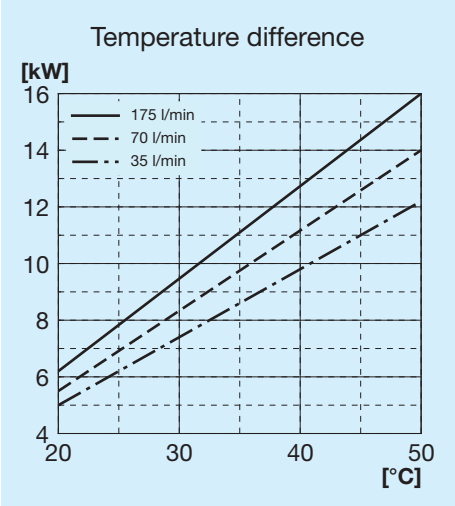

Radiator passage pressure drop

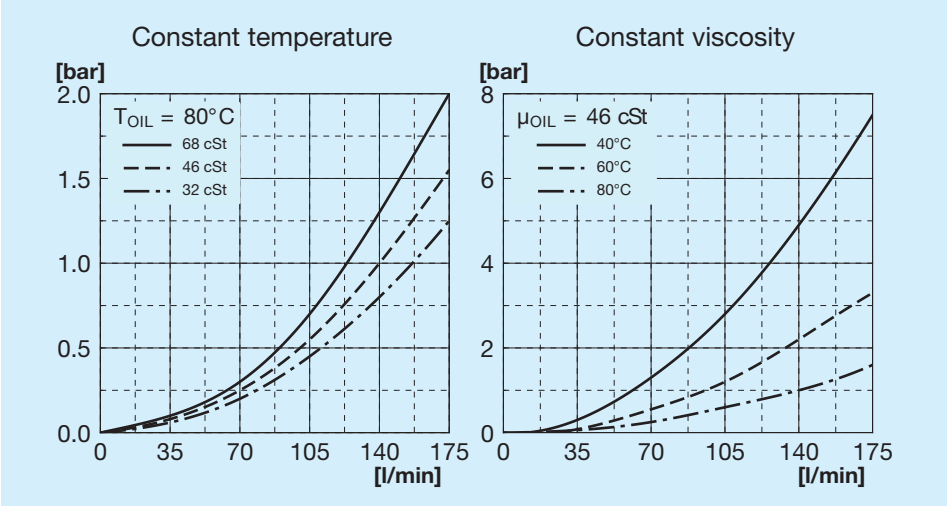

Bypass passage load loss

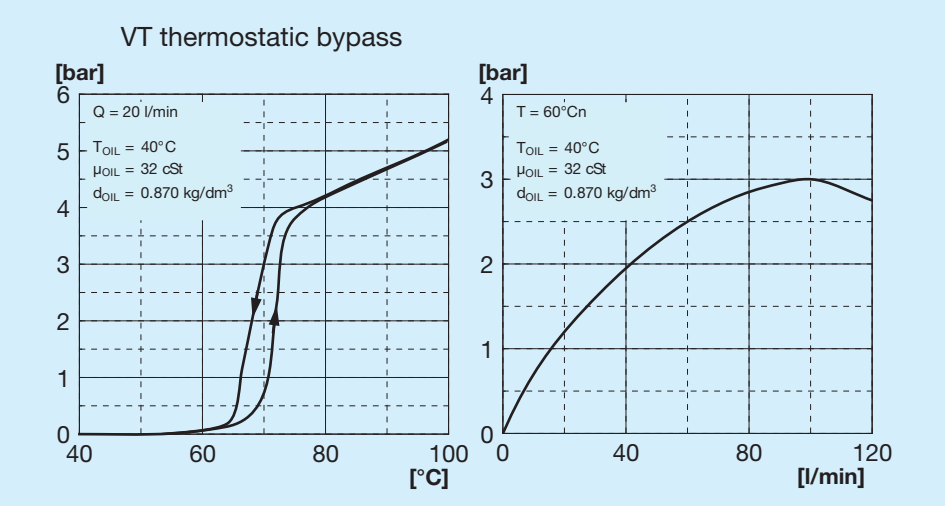

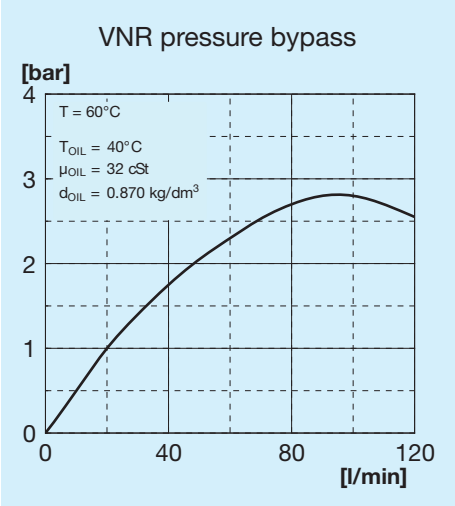

Bypass valves

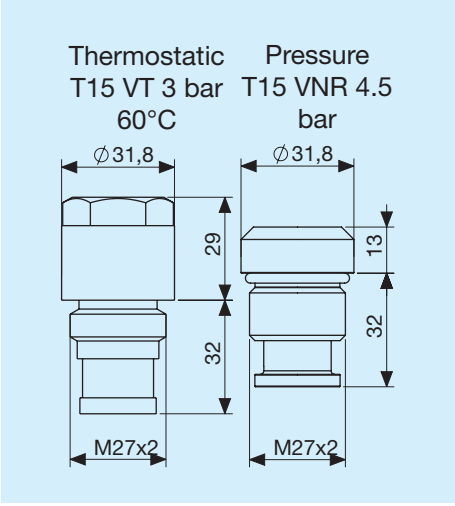

Legend

A48	Exchanger type
2E	2 Solenoid valves
A	Aspirating
S	Blowing
230V B14	Fan unit voltage
400V B14	Fan unit voltage
T15 VT	Thermostatic bypass valve 3 bar 60°C
T15 VNR	Pressure bypass valve at 4.5 bar

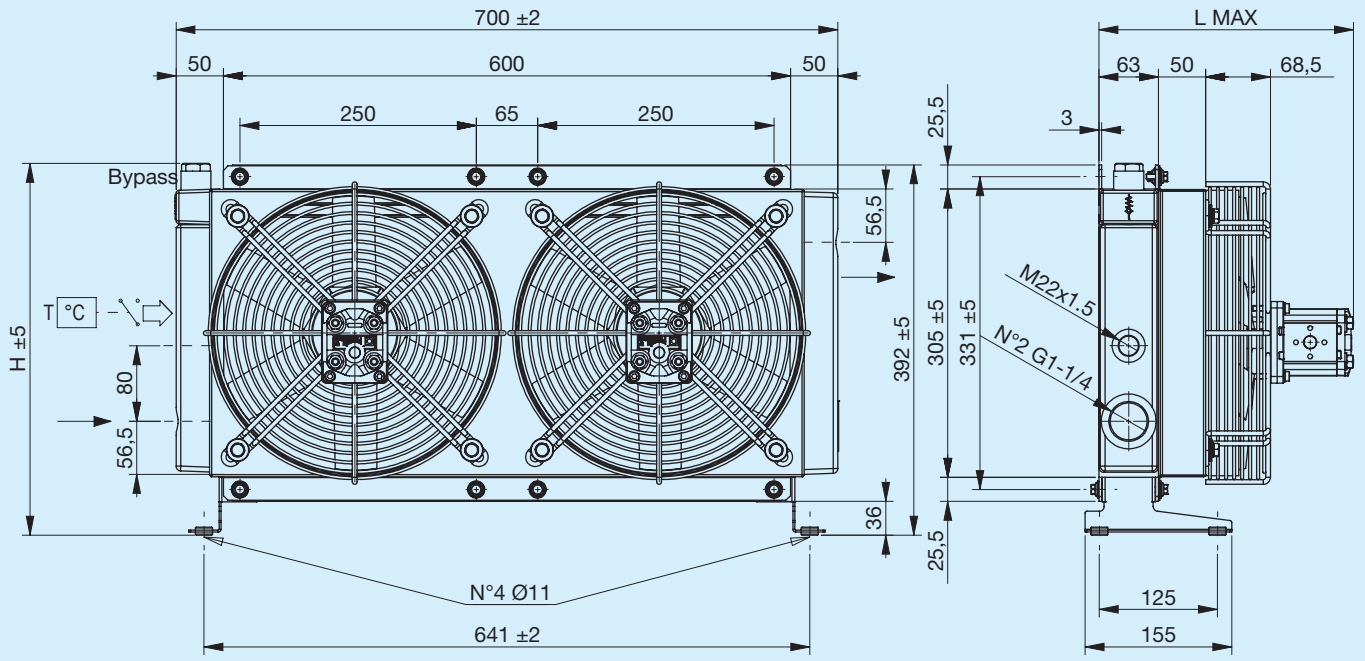

Support foot not included (see Accessories)

Code	Description	ΦFan mm	Motor displace-ment cm3	L Max mm	H mm	Weight Kg	Capacity l
FR634213103	**A48 IA HYDR.MOT. GR1 bypass T15 V.T. 3 bar 60°C**	2X290	6	271	391	19	3.2
FR634213104	**A48 IS HYDR.MOT. GR1 bypass T15 V.T. 3 bar 60°C**	2X290	6	271	391	19	3.2
FR634211003	**A48 IA HYDR.MOT. GR1 bypass T15 VNR 4.5 bar**	2X290	6	271	375	19	3.2
FR634211004	**A48 IS HYDR.MOT. GR1 bypass T15 VNR 4.5 bar**	2X290	6	271	375	19	3.2
FR634210003	**A48 IA HYDR.MOT. GR1**	2X290	6	271	391	19	3.2
FR634210004	**A48 IS HYDR.MOT. GR1**	2X290	6	271	391	19	3.2

Heat exchange (thermal) capacity

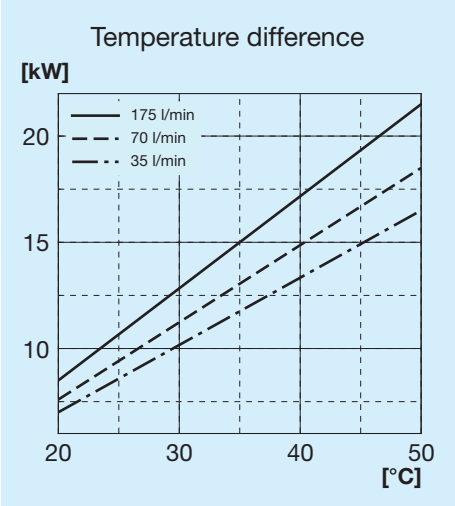

Radiator passage pressure drop

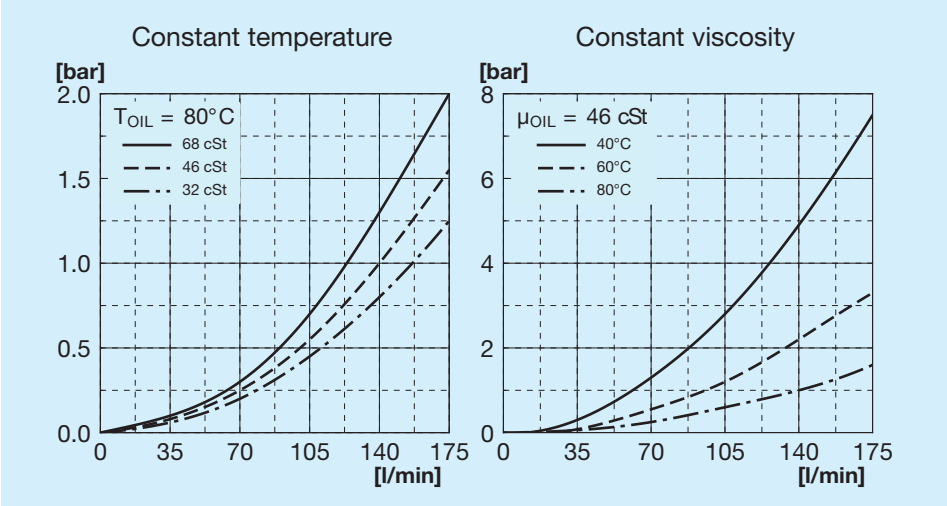

Bypass passage load loss

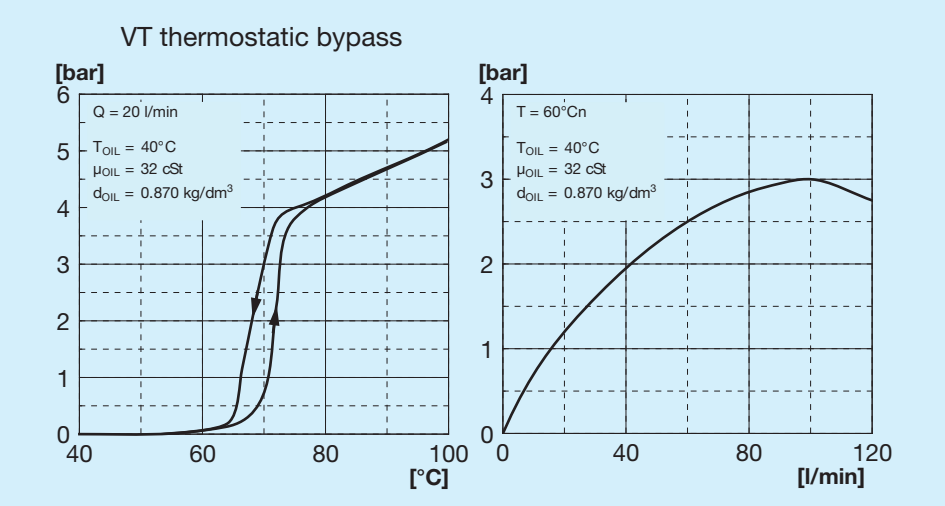

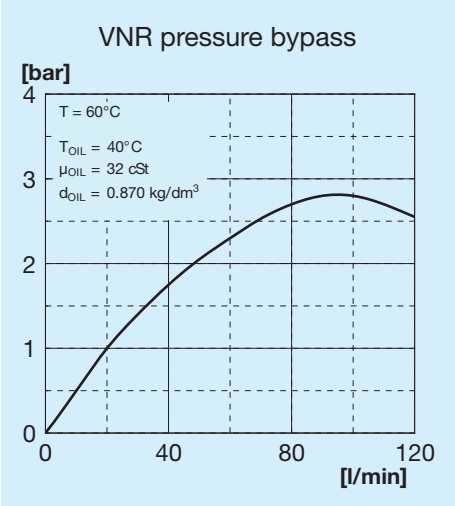

Bypass valves

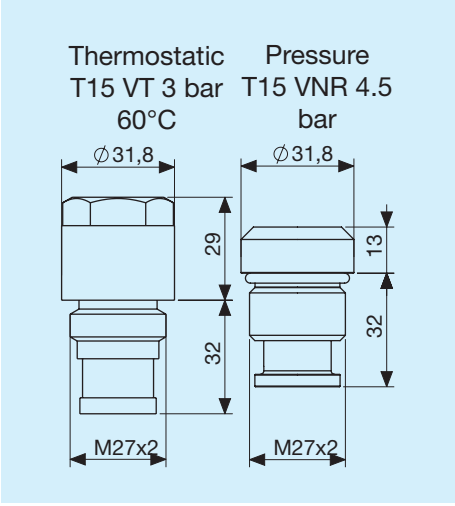

Legend

A48	Exchanger type
IA	Hydraulic aspirating
IS	Hydraulic blowing
SETT.	With motor mounting
HYD. MOT.	With integrated motor mounting
GR1	Group 1
GR2	Group 2
T15 VT	Thermostatic bypass valve 3 bar 60°C
T15 VNR	Pressure bypass valve at 4.5 bar

Left supporting foot

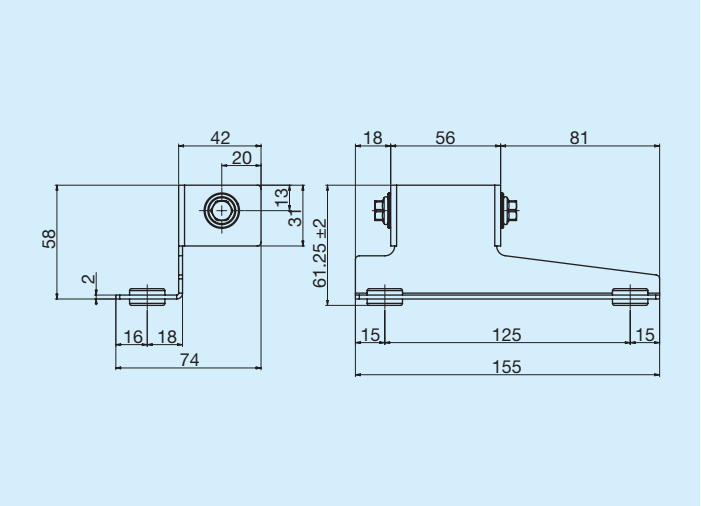

	Code
Left supporting foot	FR290000011R

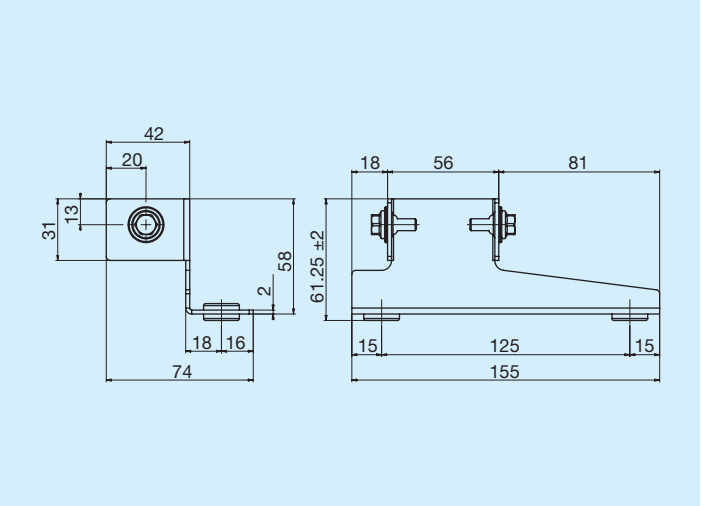

	Code
Right supporting foot	FR290000012R

Thermostats

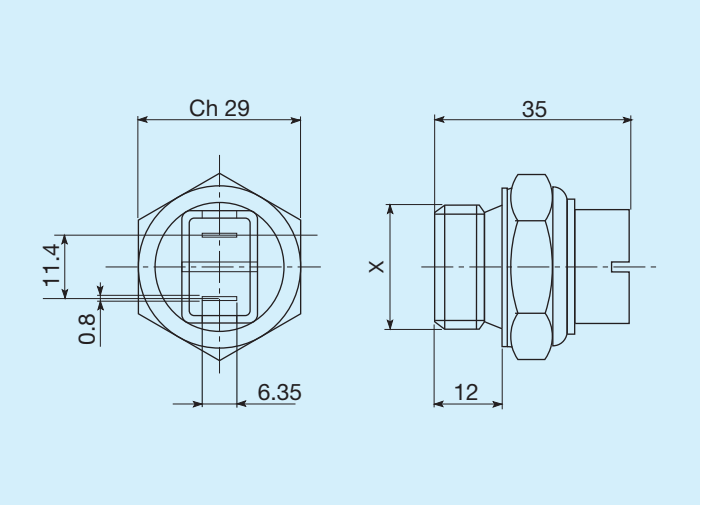

Trigger temperature C°	Threading	Code
45 - 35	M22x1.5	FR361104535R
60 - 50	M22x1.5	FR361106050R
80 - 70	M22x1.5	FR361108070R
82 - 68	M22x1.5	FR361108268R
85 - 76	M22x1.5	FR361108576R

IP54 protected thermal switch

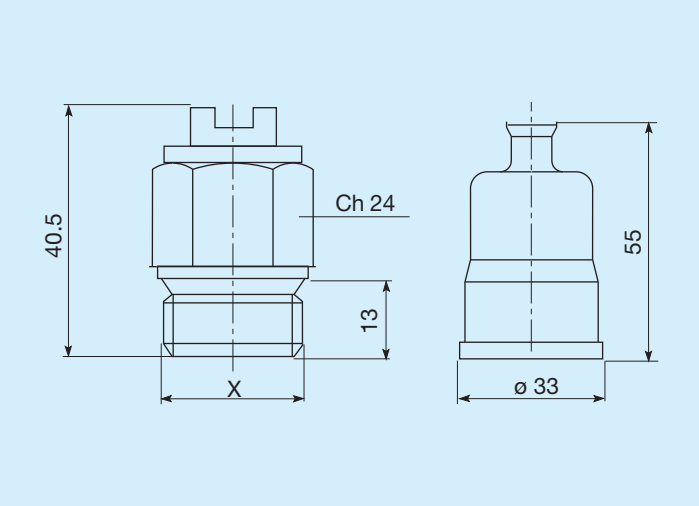

Trigger temperature C°	Threading	Code
45 - 35	M22x1.5	FR361124535R
50 - 40	M22x1.5	FR361125040R
60 - 50	M22x1.5	FR361126050R
70 - 60	M22x1.5	FR361127060R
80 -70	M22x1.5	FR361128070R

IP65 protected thermal switch

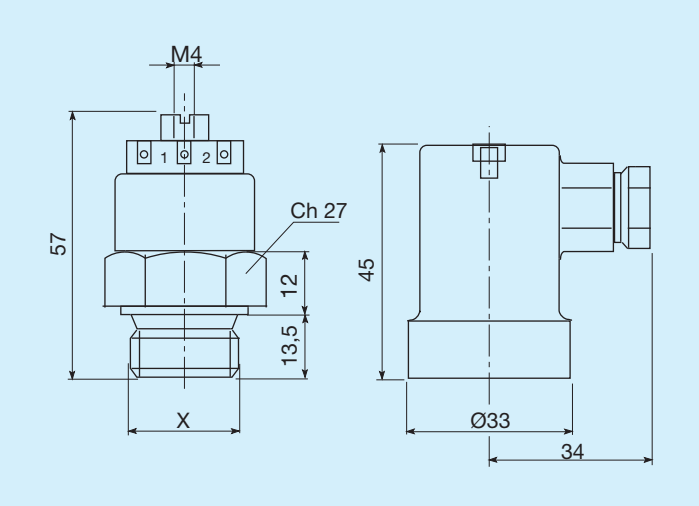

Trigger temperature C°	Threading	Code
45 - 35	M22x1.5	FR361154535R
47 - 36	M22x1.5	FR361155040R
60 - 50	M22x1.5	FR361176050R
80 - 70	M22x1.5	FR361158070R