A83

Before using the heat exchanger, carefully read the document entitled GENERAL INSTRUCTIONS FOR HEAT EXCHANGER USE.

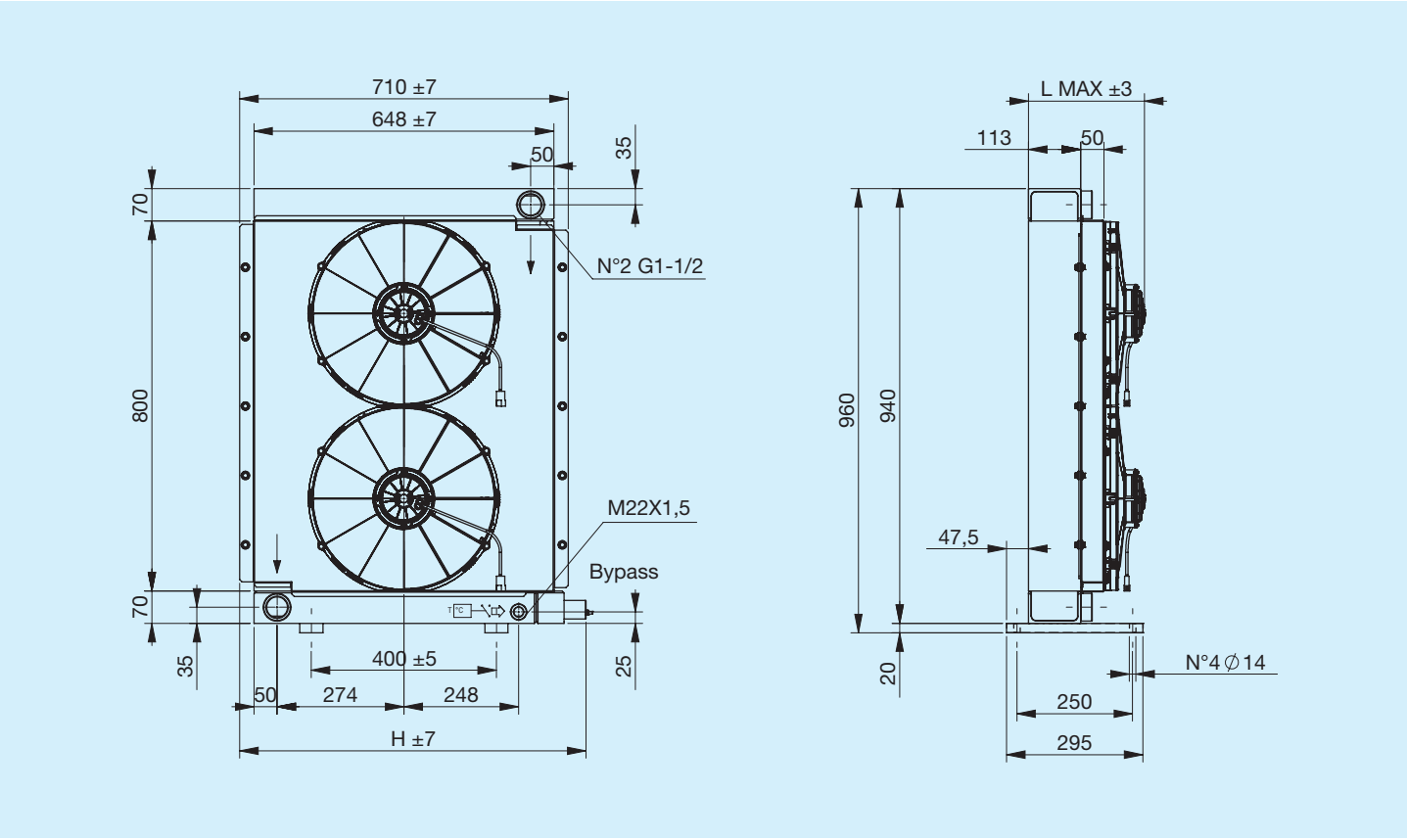

Code	Description	Ø Fan	Air flow rate	Voltage	Current	L Max	H	Weight	Capacity
		mm	m³/h	V	A	mm	mm	Kg	l
FR633243103	A83 2EAP 12V bypass T15 V.T. 6 bar 50°C	2X385	2X2850	12	2X22	250	749	45	23
FR633243104	A83 2ESP 12V bypass T15 V.T. 6 bar 50°C	2X385	2X3070	12	2X22	250	749	45	23
FR633241003	A83 2EAP 12V bypass T15 VNR 4.5 bar	2X385	2X2850	12	2X22	250	711	45	23
FR633241004	A83 2ESP 12V bypass T15 VNR 4.5 bar	2X385	2X3070	12	2X22	250	711	45	23
FR633243113	A83 2EAP 24V bypass T15 V.T. 6 bar 50°C	2X385	2X3070	24	2X11	250	749	45	23
FR633243114	A83 2ESP 24V bypass T15 V.T. 6 bar 50°C	2X385	2X3180	24	2X11	250	749	45	23
FR633241013	A83 2EAP 24V bypass T15 VNR 4.5 bar	2X385	2X3070	24	2X11	250	711	45	23
FR633241014	A83 2ESP 24V bypass T15 VNR 4.5 bar	2X385	2X3180	24	2X11	250	711	45	23
FR633240003	A83 2EAP 12V	2X385	2X2850	12	2X22	250	710	45	23
FR633240004	A83 2ESP 12V	2X385	2X3070	12	2X22	250	710	45	23
FR633240013	A83 2EAP 24V	2X385	2X3070	24	2X11	250	710	45	23
FR633240014	A83 2ESP 24V	2X385	2X3180	24	2X11	250	710	45	23

Characteristic curves

Heat exchange (thermal) capacity

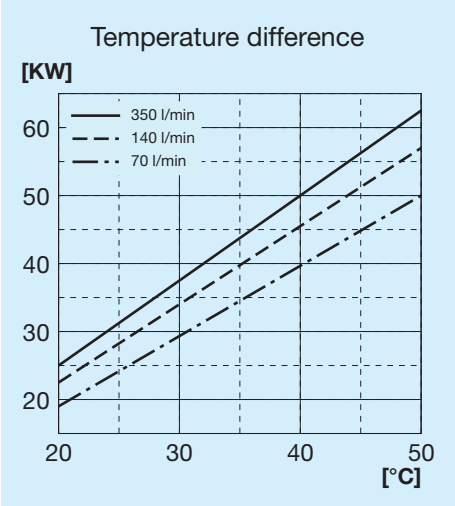

Radiator passage pressure drop

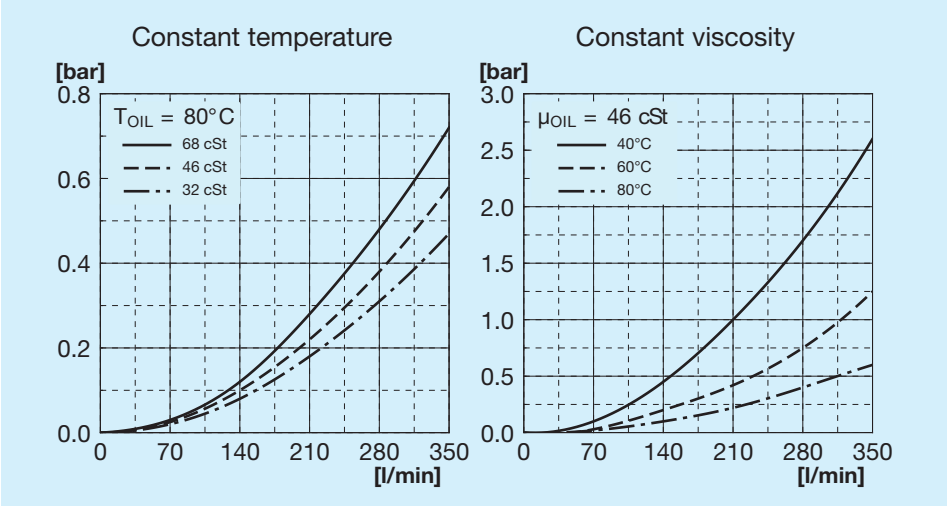

Bypass passage load loss

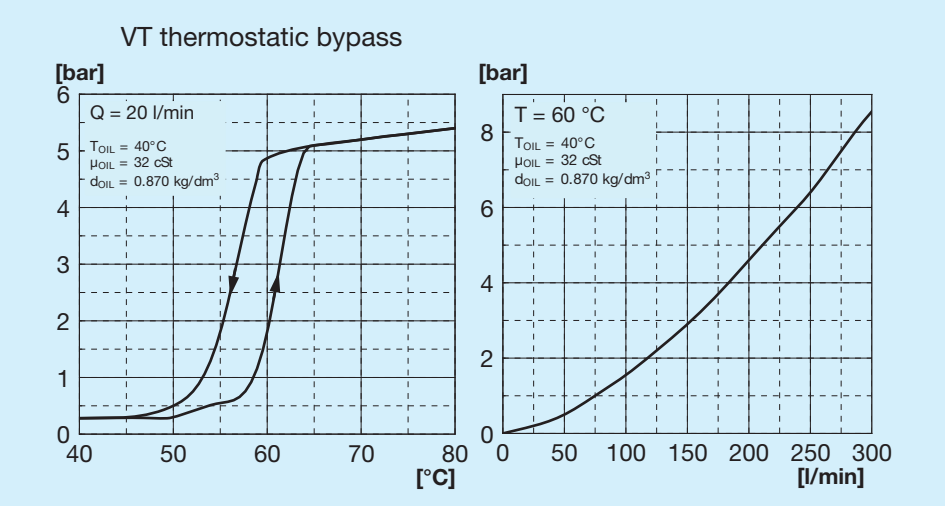

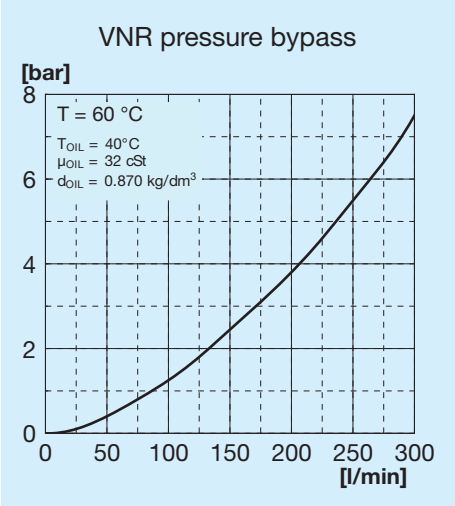

Bypass valves

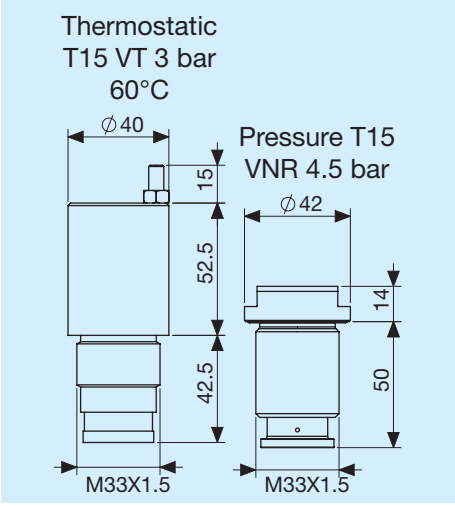

Legend

A83	Exchanger type
1E	1 Fan unit
A	Aspirating
S	Blowing
AP	High power aspirating
SP	High power blower
AX	Extra high power aspirating
SX	Extra high power blower
12V	Fan unit voltage
24V	Fan unit voltage
T15 VT	Thermostatic bypass valve 3 bar 60°C
T15 VNR	Pressure bypass valve at 4.5 bar

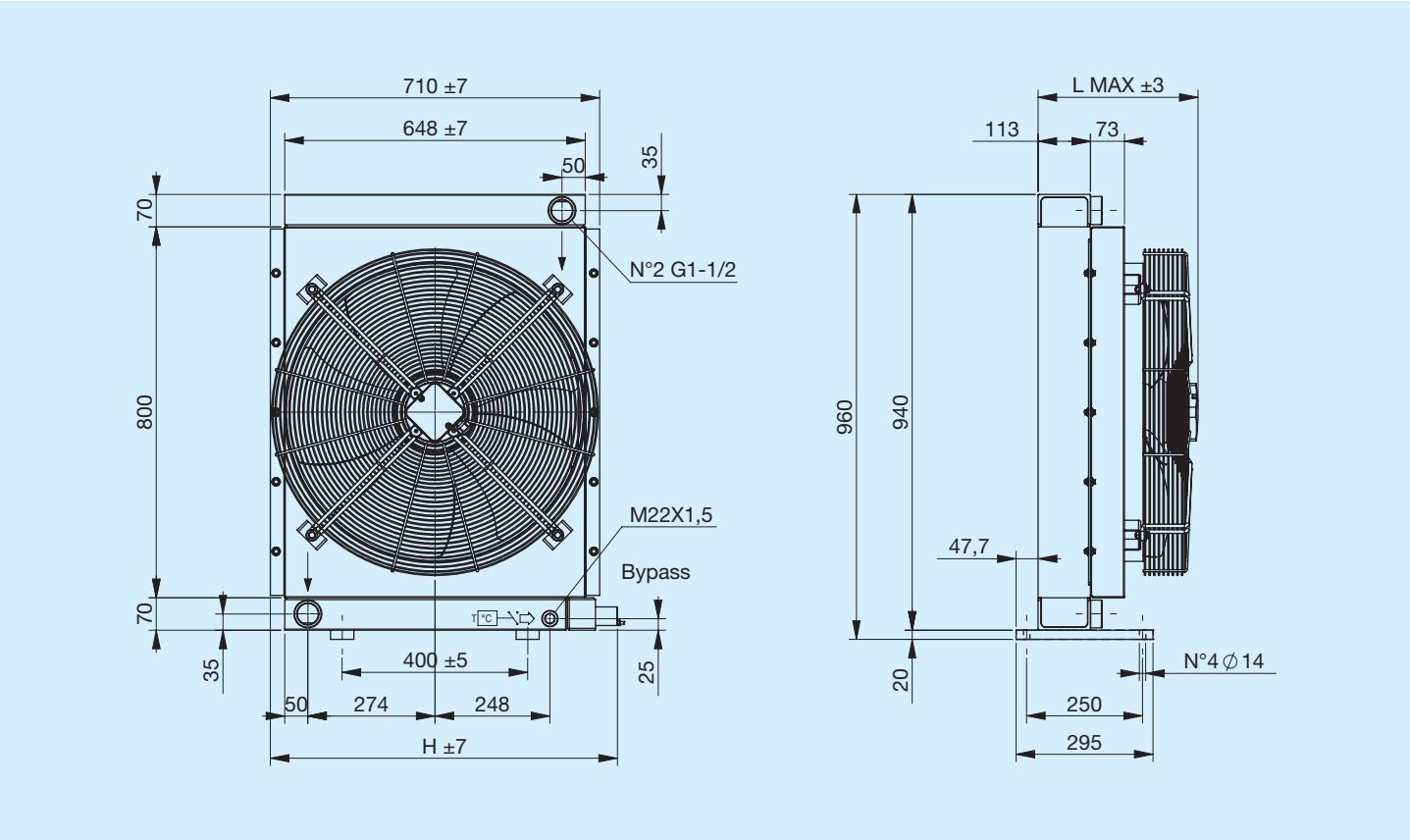

Code	Description	Ø Fan	Power	Frequency	Speed	Protection	L Max	H	Weight	Capacity
		mm	W	Hz	min-¹	IP	mm	mm	Kg	l
FR633243131	A83 1EA 230V bypass T15 V.T. 6 bar 50°C	630	600	50	880	54	366	749	52	23
FR633243132	A83 1ES 230V bypass T15 V.T. 6 bar 50°C	630	600	50	880	54	366	749	52	23
FR633241031	A83 1EA 230V bypass T15 VNR 4.5 bar	630	600	50	880	54	366	711	52	23
FR633241032	A83 1ES 230V bypass T15 VNR 4.5 bar	630	600	50	880	54	366	711	52	23
FR633243121	A83 1EA 400V bypass T15 V.T. 6 bar 50°C	630	510	50	860	54	361	749	52	23
FR633243122	A83 1ES 400V bypass T15 V.T. 6 bar 50°C	630	510	50	860	54	361	749	52	23
FR633241021	A83 1EA 400V bypass T15 VNR 4.5 bar	630	510	50	860	54	361	711	52	23
FR633241022	A83 1ES 400V bypass T15 VNR 4.5 bar	630	510	50	860	54	361	711	52	23
FR633240031	A83 1EA 230V	630	600	50	880	54	369	710	52	23
FR633240032	A83 1ES 230V	630	600	50	880	54	369	710	52	23
FR633240021	A83 1EA 400V	630	510	50	860	54	364	710	52	23
FR633240022	A83 1ES 400V	630	510	50	860	54	364	710	52	23

Heat exchange (thermal) capacity

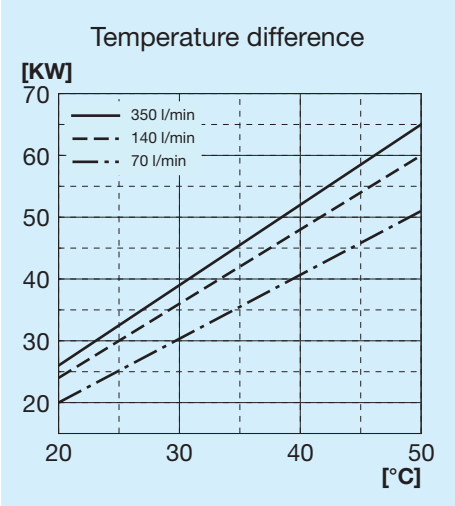

Radiator passage pressure drop

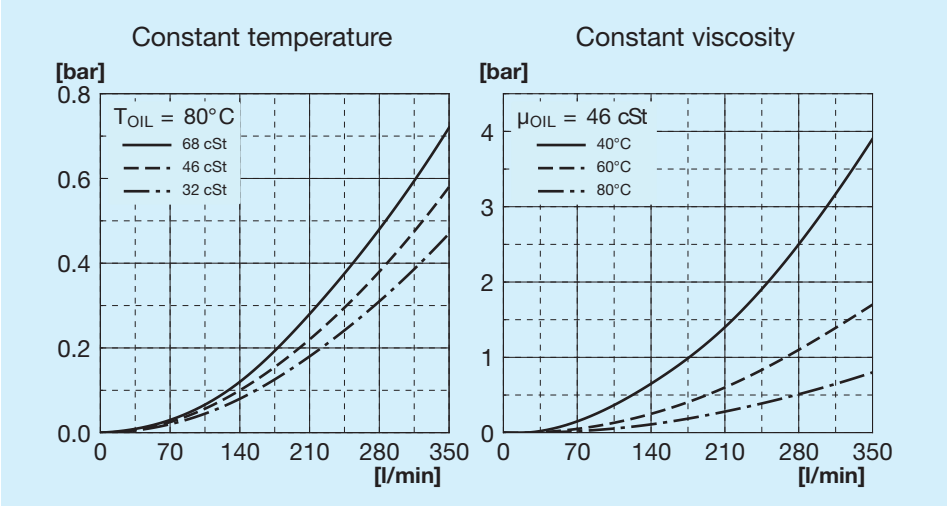

Bypass passage load loss

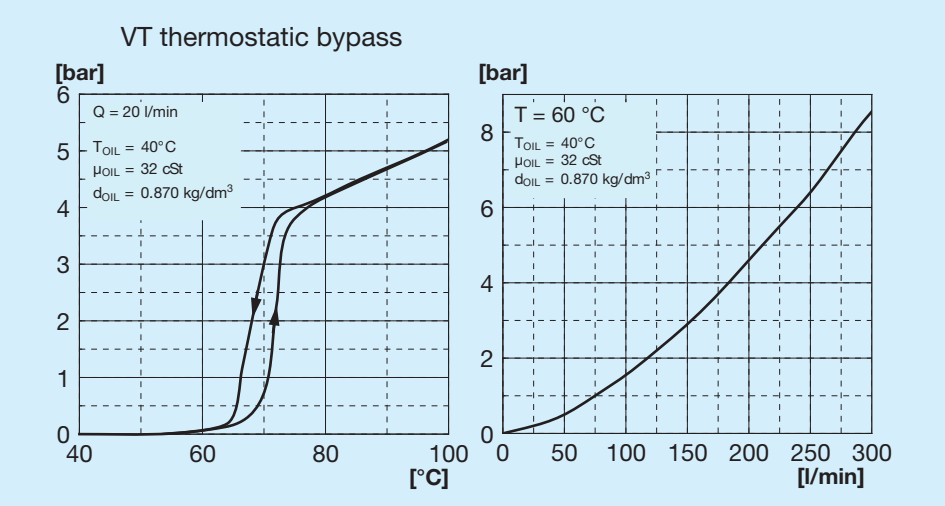

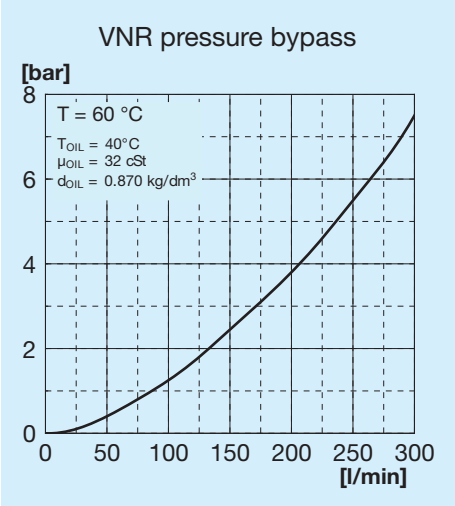

Bypass valves

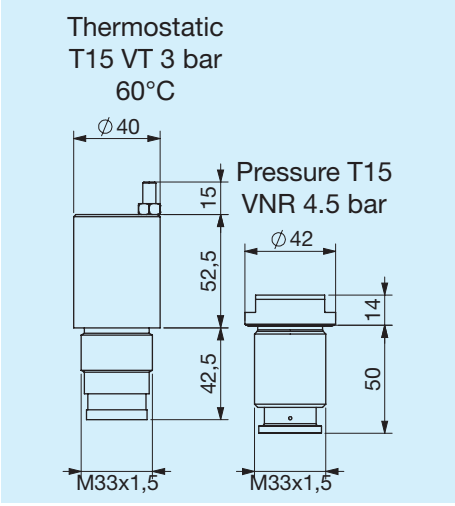

Legend

A83	Exchanger type
1E	1 Fan unit
A	Aspirating
S	Blowing
230V	Fan unit voltage
400V	Fan unit voltage
T15 VT	Thermostatic bypass valve 3 bar 60°C
T15 VNR	Pressure bypass valve at 4.5 bar

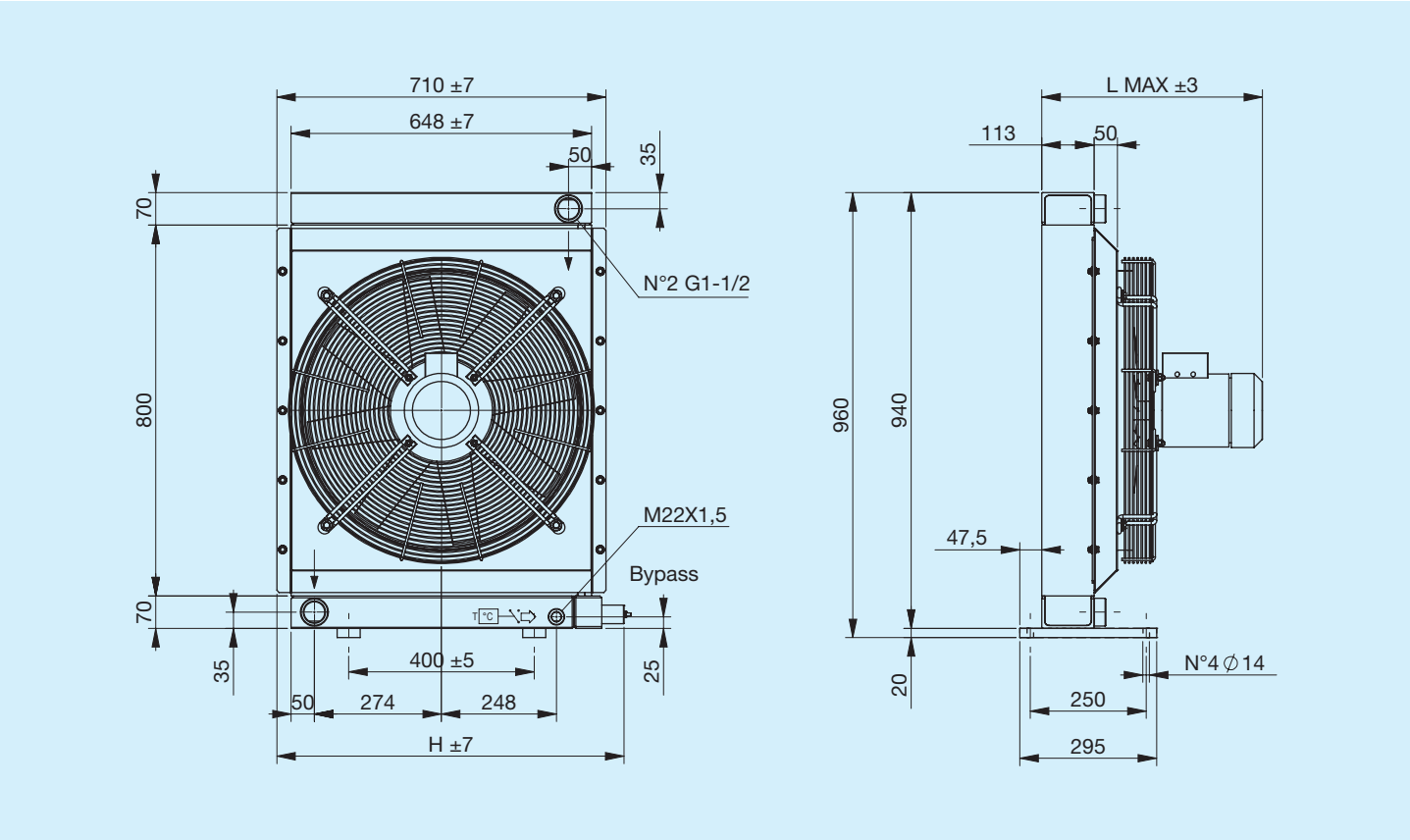

Code	Description	Ø Fan	Power	Frequency	Speed	Protection	L Max	H	Weight	Capacity
		mm	W	Hz	min-¹	IP	mm	mm	Kg	l
FR633243141	A83 1EA 220V-B14 bypass T15 V.T. 6 bar 50°C	580	750	50	1390	65	477	749	60.5	23
FR633243142	A83 1EA 220V-B14 bypass T15 V.T. 6 bar 50°C	580	750	50	1390	65	477	749	60.5	23
FR633241041	A83 1EA 220V-B14 bypass T15 VNR 4.5 bar	580	750	50	1390	65	477	711	60.5	23
FR633241042	A83 1EA 220V-B14 bypass T15 VNR 4.5 bar	580	750	50	1390	65	477	711	60.5	23
FR633243151	A83 1EA 380V-B14 bypass T15 V.T. 6 bar 50°C	580	750	50	1390	65	477	749	60.5	23
FR633243152	A83 1ES 380V-B14 bypass T15 V.T. 6 bar 50°C	580	750	50	1390	65	477	749	60.5	23
FR633241051	A83 1EA 380V-B14 bypass T15 VNR 4.5 bar	580	750	50	1390	65	477	711	60.5	23
FR633241052	A83 1ES 380V-B14 bypass T15 VNR 4.5 bar	580	750	50	1390	65	477	711	60.5	23
FR633240041	A83 1EA 220V-B14	580	750	50	1390	65	477	710	60.5	23
FR633240042	A83 1ES 220V-B14	580	750	50	1390	65	477	710	60.5	23
FR633240051	A83 1EA 380V-B14	580	750	50	1390	65	477	710	60.5	23
FR633240052	A83 1ES 380V-B14	580	750	50	1390	65	477	710	60.5	23

Heat exchange (thermal) capacity

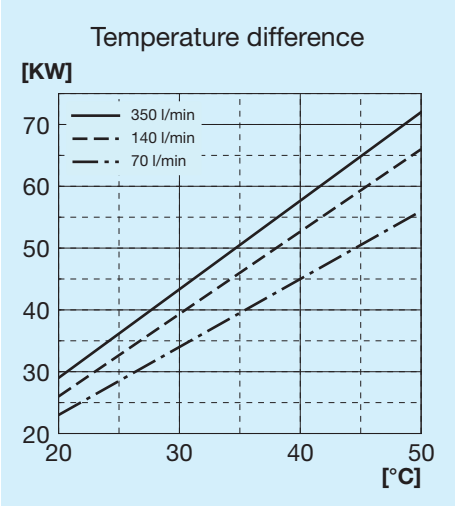

Radiator passage pressure drop

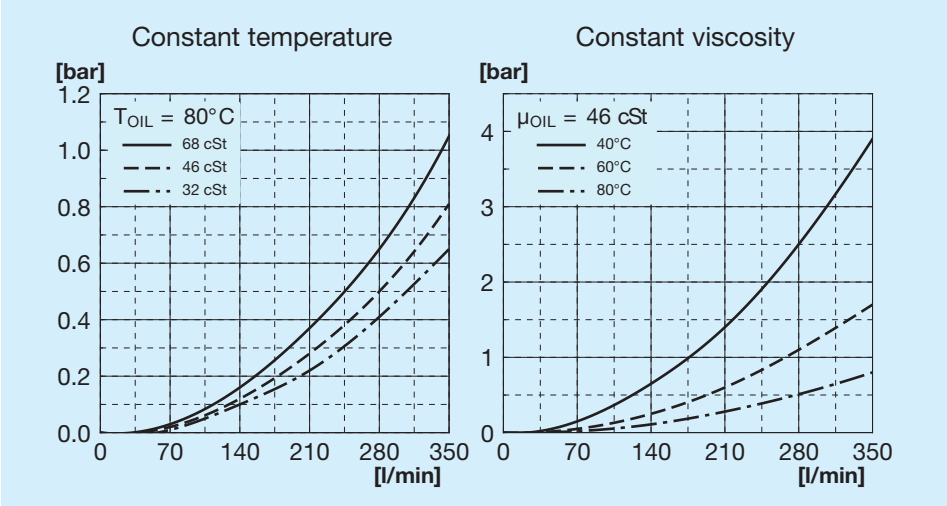

Bypass passage load loss

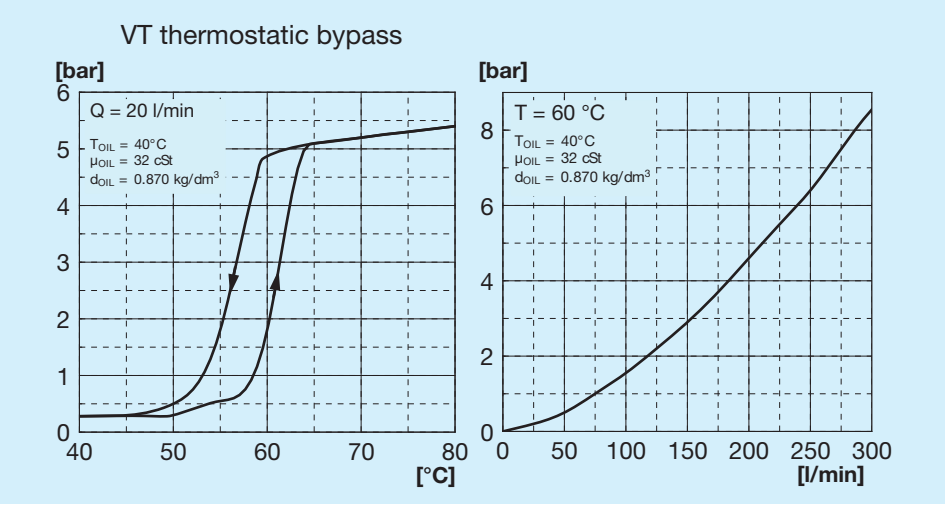

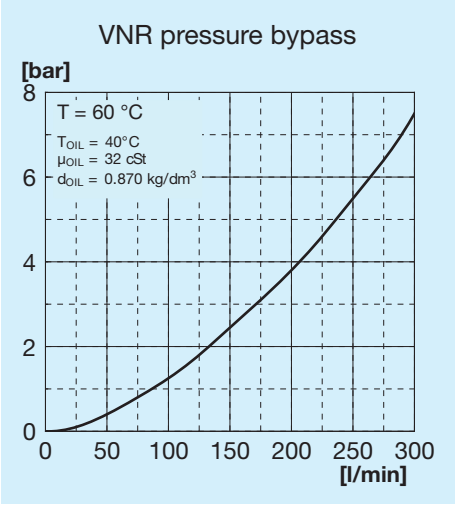

Bypass valves

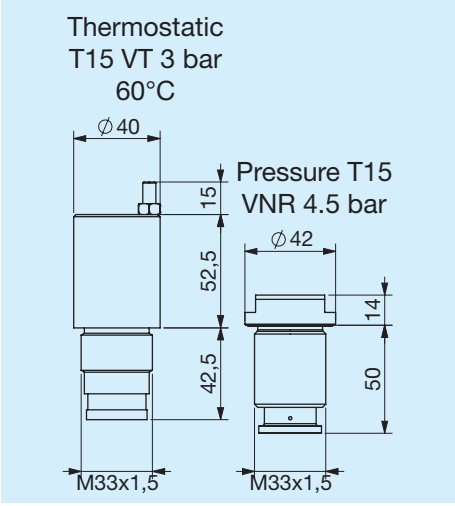

Legend

A83	Exchanger type
1E	1 Fan unit
A	Aspirating
S	Blowing
230V B14	Fan unit voltage
400V B14	Fan unit voltage
T15 VT	Thermostatic bypass valve 3 bar 60°C
T15 VNR	Pressure bypass valve at 4.5 bar

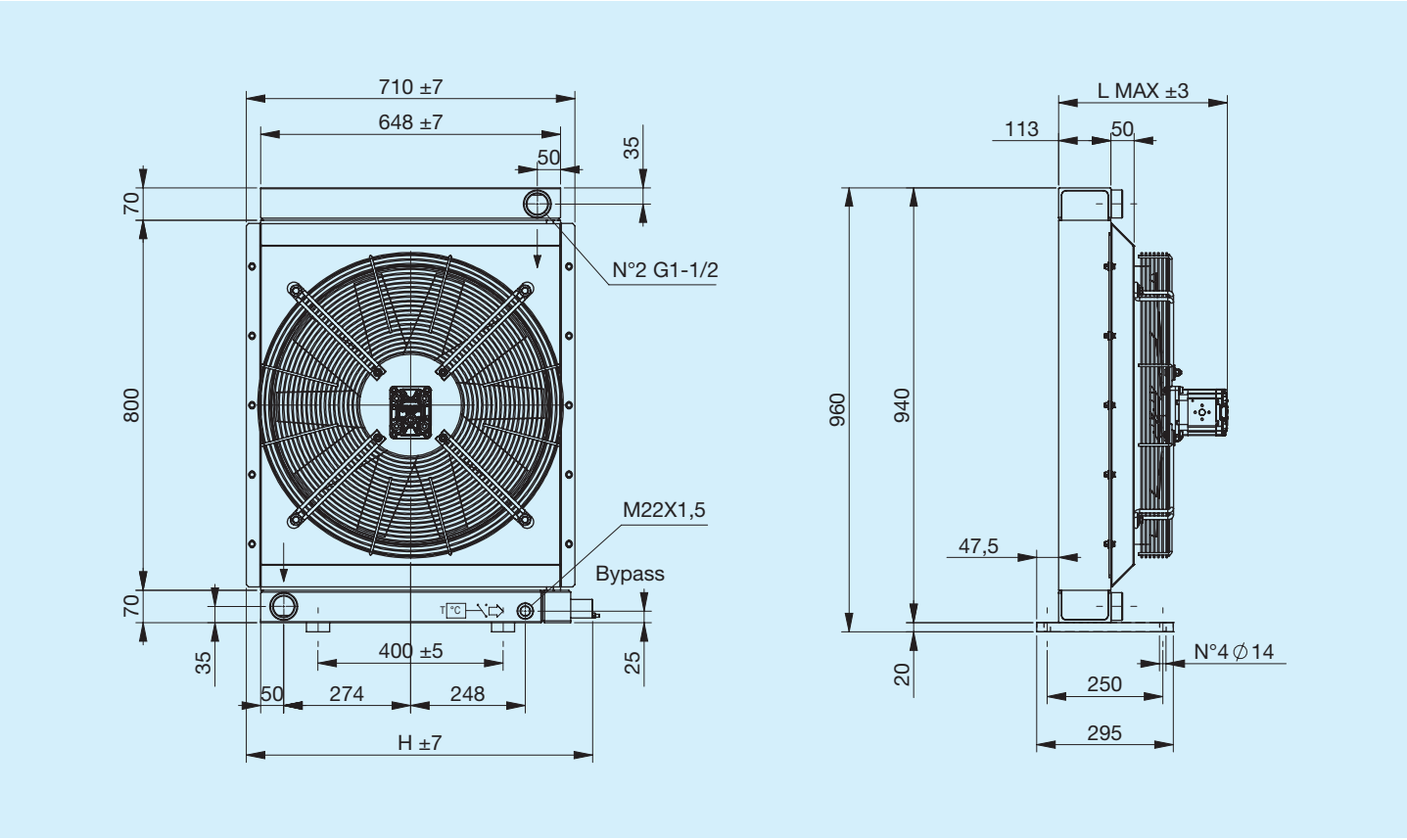

Code	Description	Ø Fan	Motor displace-ment	L Max	H	Weight	Capacity
		mm	**cm3/h**	**mm**	**mm**	**Kg**	**l**
FR634243101	**A83 IA SETT.GR2 bypass T15 V.T. 6 bar 50°C**	580	_	300	749	53	23
FR634243102	**A83 IS SETT.GR2 bypass T15 V.T. 6 bar 50°C**	580	_	300	749	53	23
FR634241001	**A83 IA SETT.GR2 bypass T15 VNR 4.5 bar**	580	_	300	711	53	23
FR634241002	**A83 IS SETT.GR2 bypass T15 VNR 4.5 bar**	580	_	300	711	53	23
FR634243113	**A83 IA HYDR.MOT. GR2 bypass T15 V.T. 6 bar 50°C**	580	11	360	749	54	23
FR634243114	**A83 IS HYDR.MOT. GR2 bypass T15 V.T. 6 bar 50°C**	580	11	360	749	54	23
FR634241013	**A83 IA HYDR.MOT. GR2 bypass T15 VNR 4.5 bar**	580	11	360	711	54	23
FR634241014	**A83 IS HYDR.MOT. GR2 bypass T15 VNR 4.5 bar**	580	11	360	711	54	23
FR634240001	**A83 IA SETT.GR2**	580	_	300	710	53	23
FR634240002	**A83 IS SETT.GR2**	580	_	300	710	53	23
FR634240013	**A83 IA HYDR.MOT. GR2**	580	11	360	710	54	23
FR634240014	**A83 IS HYDR.MOT. GR2**	580	11	360	710	54	23

Heat exchange (thermal) capacity

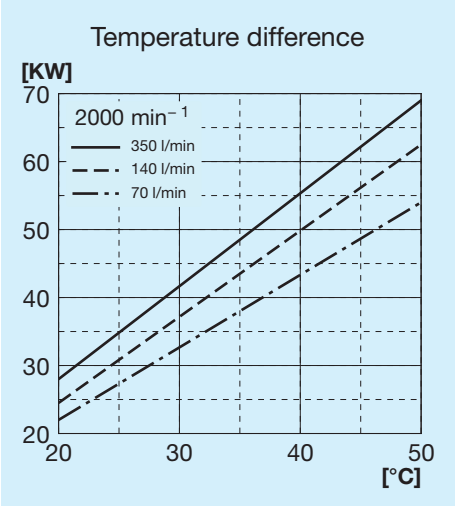

Radiator passage pressure drop

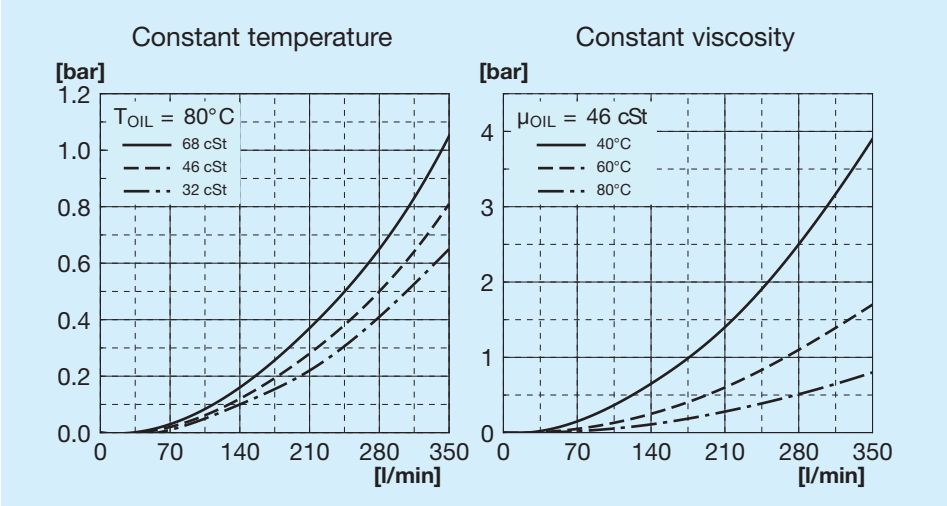

Bypass passage load loss

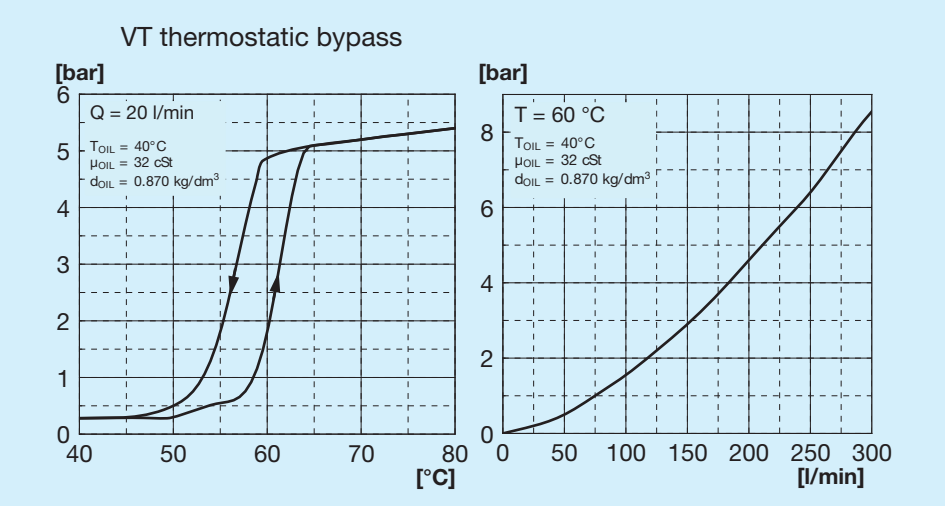

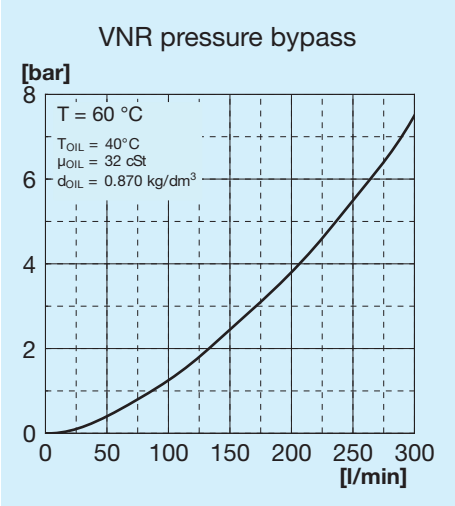

Bypass valves

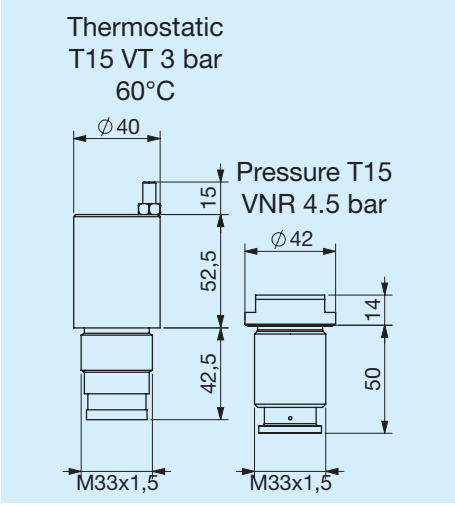

Legend

A83	Exchanger type
IA	Hydraulic aspirating
IS	Hydraulic blowing
SETT.	With motor mounting
HYD. MOT.	With integrated motor mounting
GR1	Group 1
GR2	Group 2
T15 VT	Thermostatic bypass valve 3 bar 60°C
T15 VNR	Pressure bypass valve at 4.5 bar

Thermostats

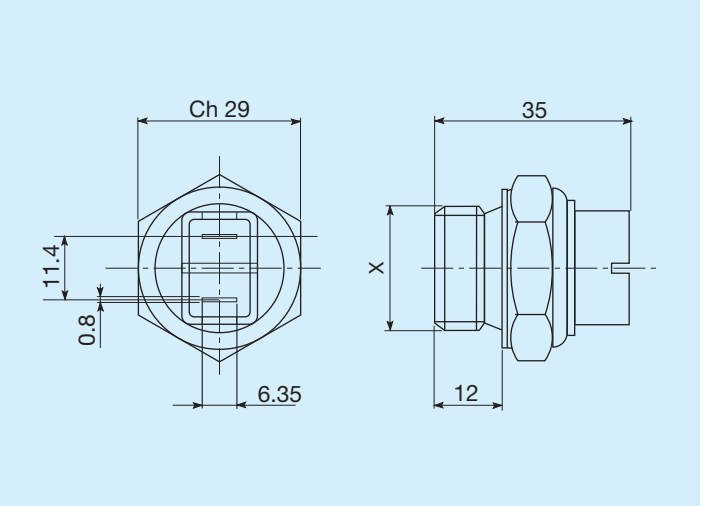

Trigger temperature C°	Threading	Code
45 - 35	M22x1.5	FR361104535R
60 - 50	M22x1.5	FR361106050R
80 - 70	M22x1.5	FR361108070R
82 - 68	M22x1.5	FR361108268R
85 - 76	M22x1.5	FR361108576R

IP54 protected thermal switch

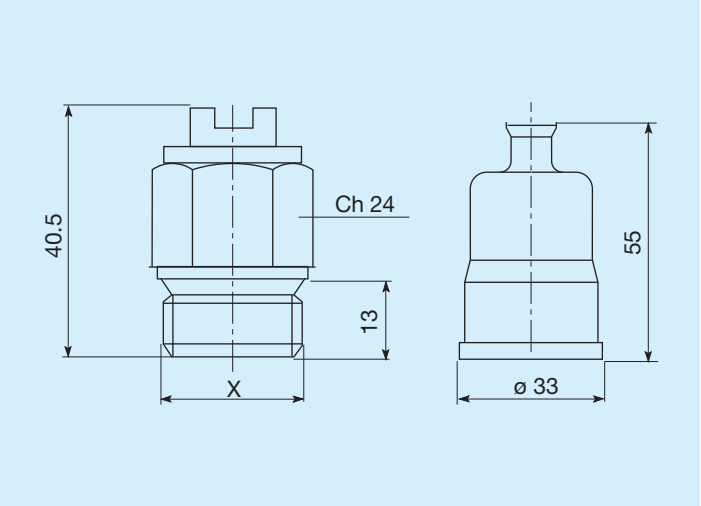

Trigger temperature C°	Threading	Code
45 - 35	M22x1.5	FR361124535R
50 - 40	M22x1.5	FR361125040R
60 - 50	M22x1.5	FR361126050R
70 - 60	M22x1.5	FR361127060R
80 -70	M22x1.5	FR361128070R

IP65 protected thermal switch

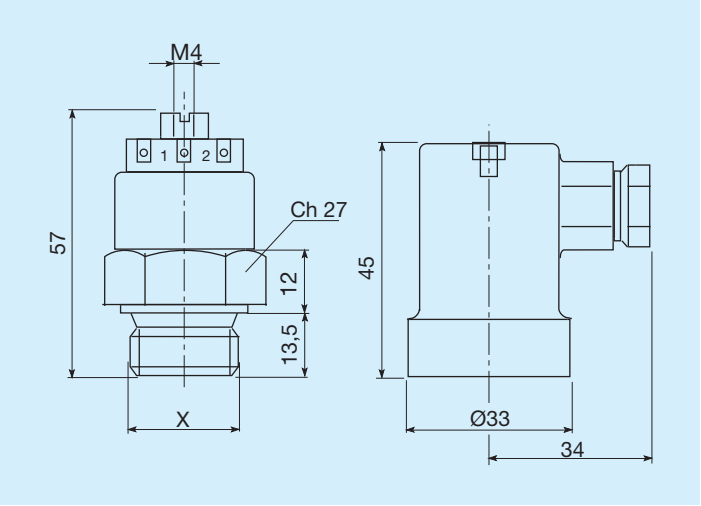

Trigger temperature C°	Threading	Code
45 - 35	M22x1.5	FR361154535R
47 - 36	M22x1.5	FR361155040R
60 - 50	M22x1.5	FR361176050R
80 - 70	M22x1.5	FR361158070R