BW0500TM Element 5/3 tandem manual Interface IBW0500

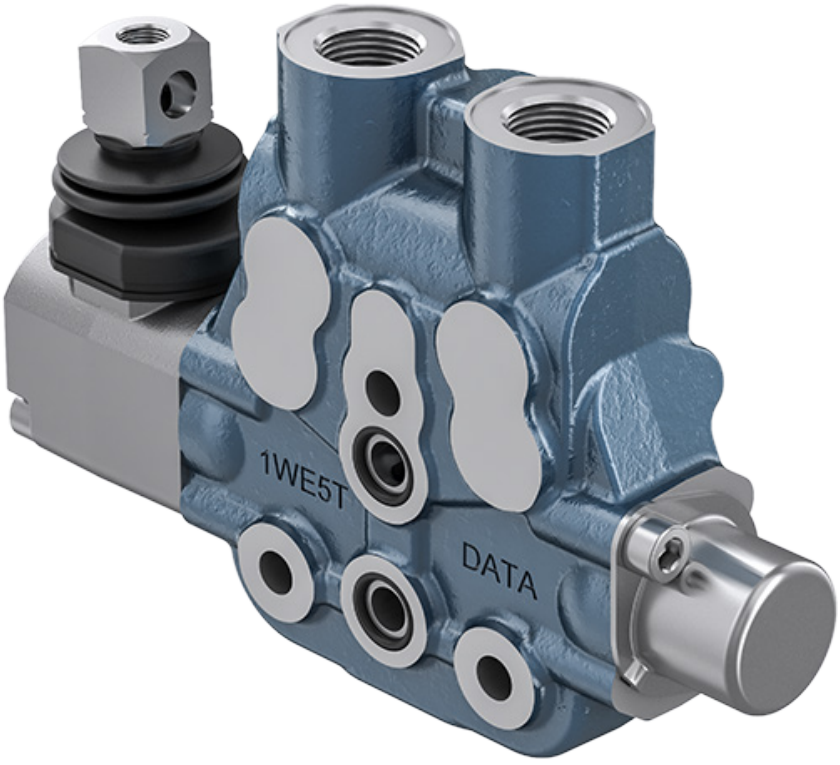

Before use, carefully read the GENERAL INSTRUCTIONS FOR USE OF DIRECTIONAL CONTROL VALVES

Nominal flow	**35 l/min** ***9.24 US gpm***
Nominal pressure	**210 bar** ***3045 psi***
Maximum tank pressure	**50 bar** ***725 psi***
Internal leakage	**60 ± 15 cc/min**
Temperature range	**-20°C +85°C NBR seals** ***(max peak +100°C)*** ***-20°C + 130°C HNBR seals***
Oil viscosity	**from 15 mm²/s to 90 mm²/s** ***(15 cSt to 90 cSt)***
Fluid	**Hydraulic fluids as defined in ISO 6743-4 standard**
Weight	**1.6 kg** ***3.5 lb***
Interface	**IBW0500**

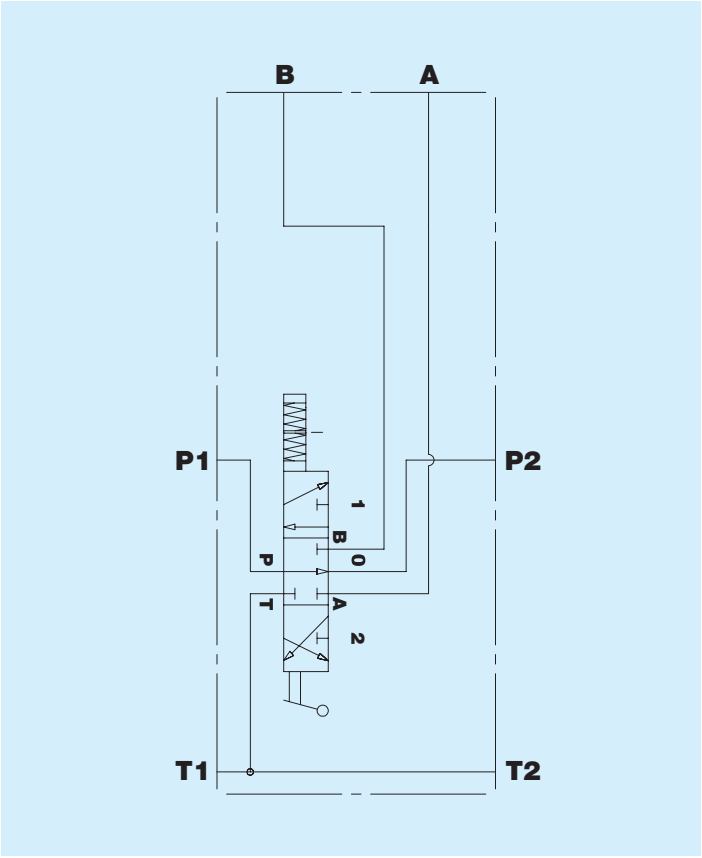

Dimensions

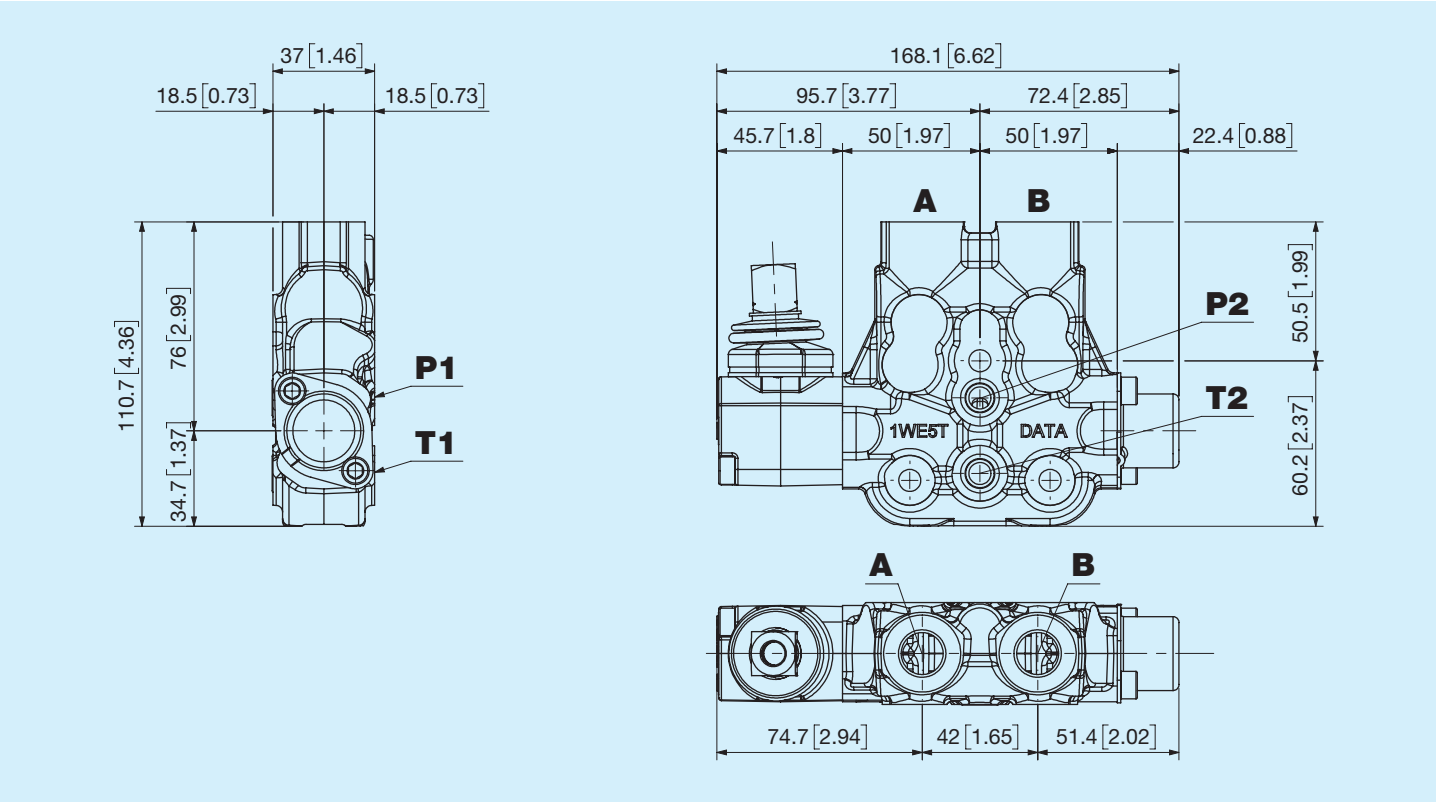

Pressure drops P-T

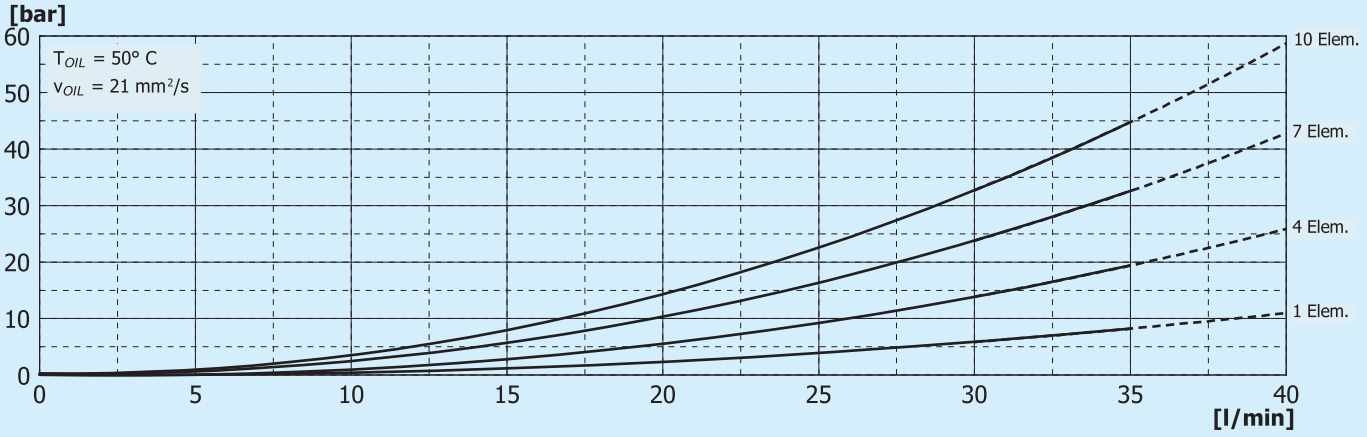

Test parameters: Spool type **001**

Pressure drop P-A/B

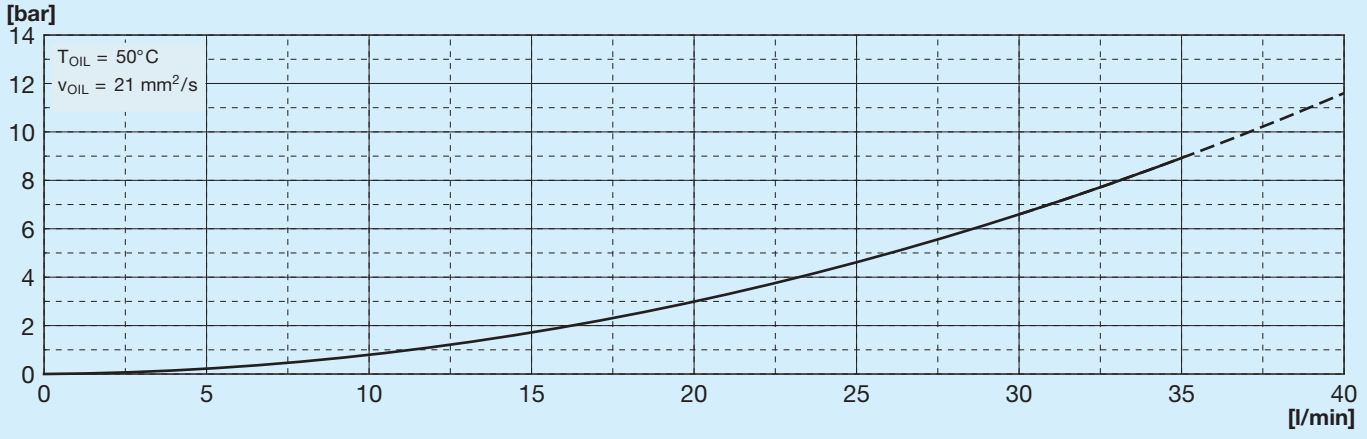

Test parameters: Spool type **001**

Pressure drop A/B-T

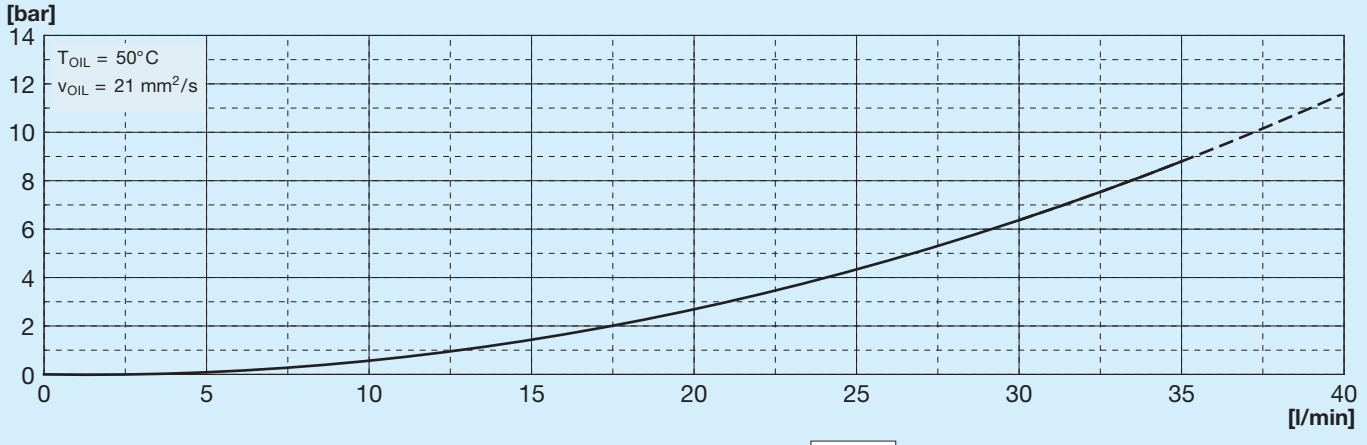

Test parameters: Spool type **001**

A Tandem

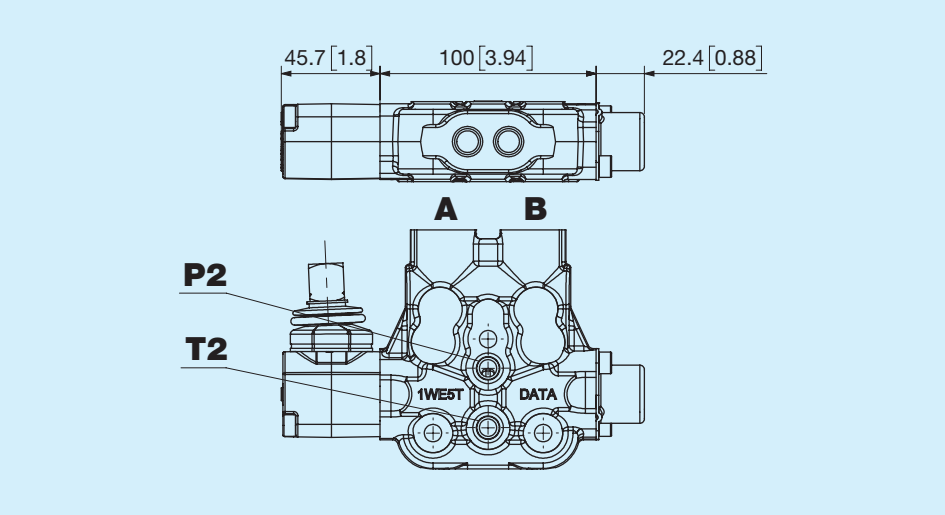

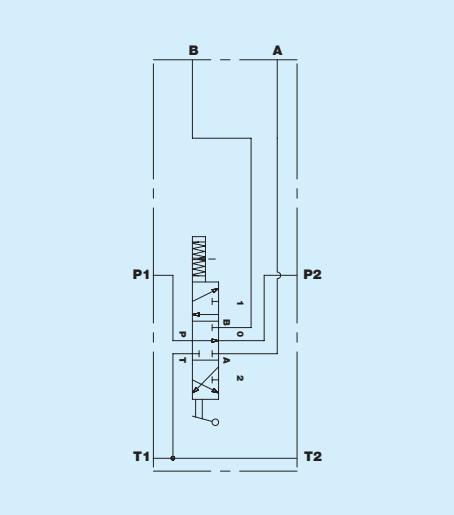

B Closing element

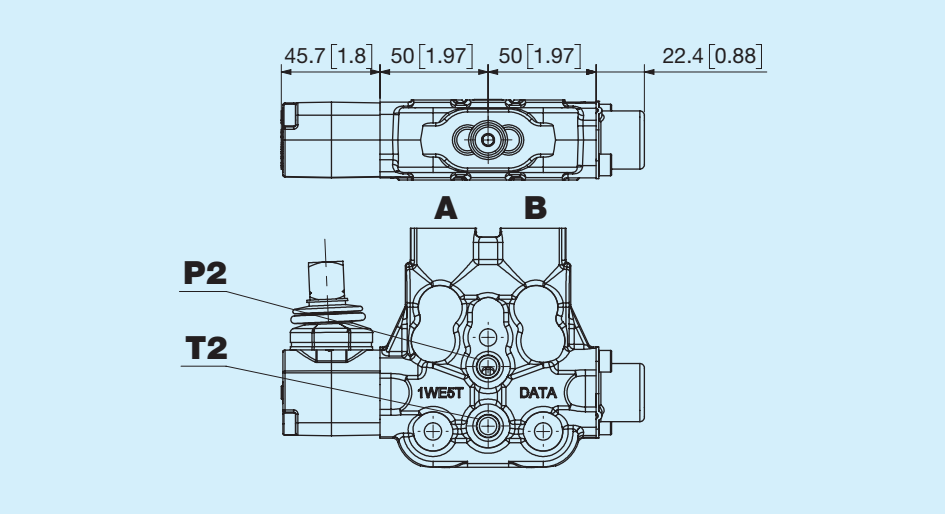

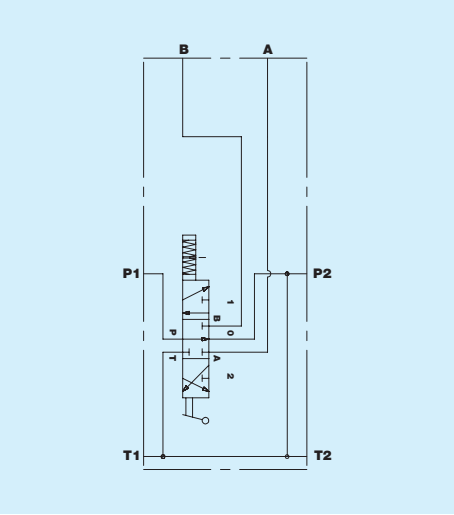

Thread port A and B

Model	Type	Torque Nm
A	3/8'' GAS ISO 1179	45
C	M18x1.5 ISO 9974	45
W	M18x1.5 ISO 6149	45
E	3/4'' - 16 SAE ISO 11926	45

L Standard kit for lever holder

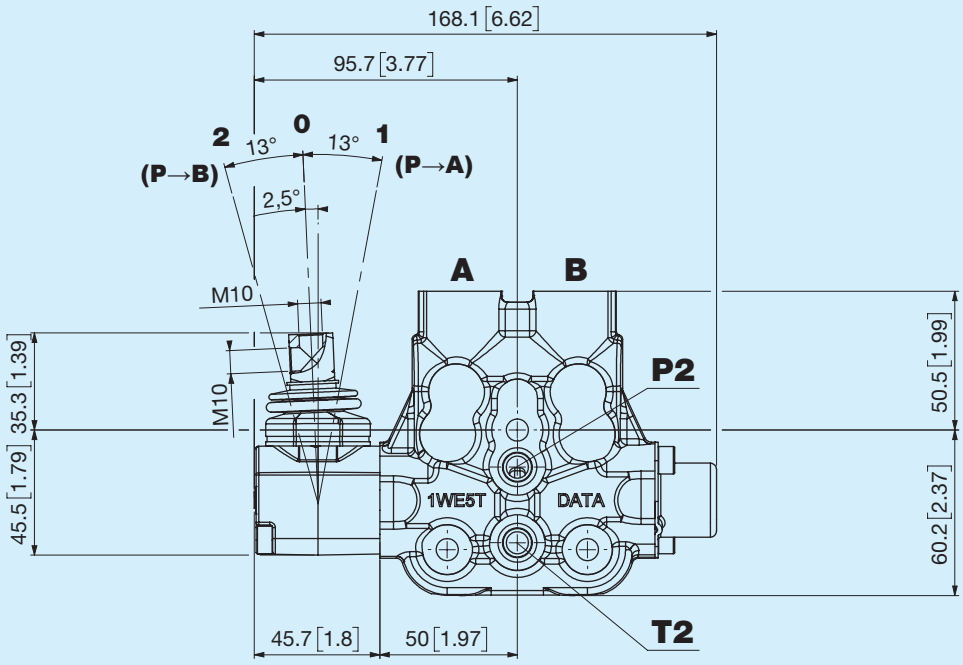

A Without lever holder standard appendix

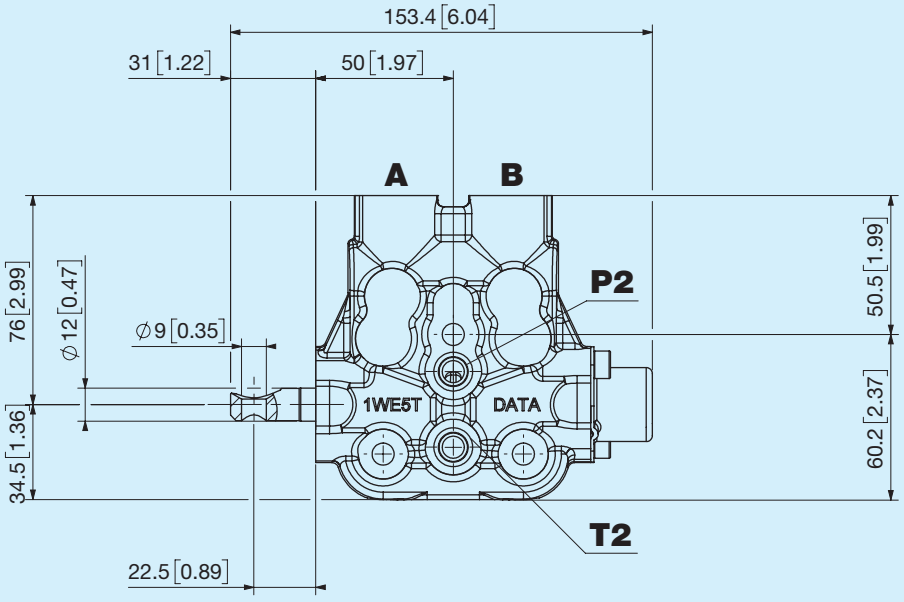

T Cable actuator setting

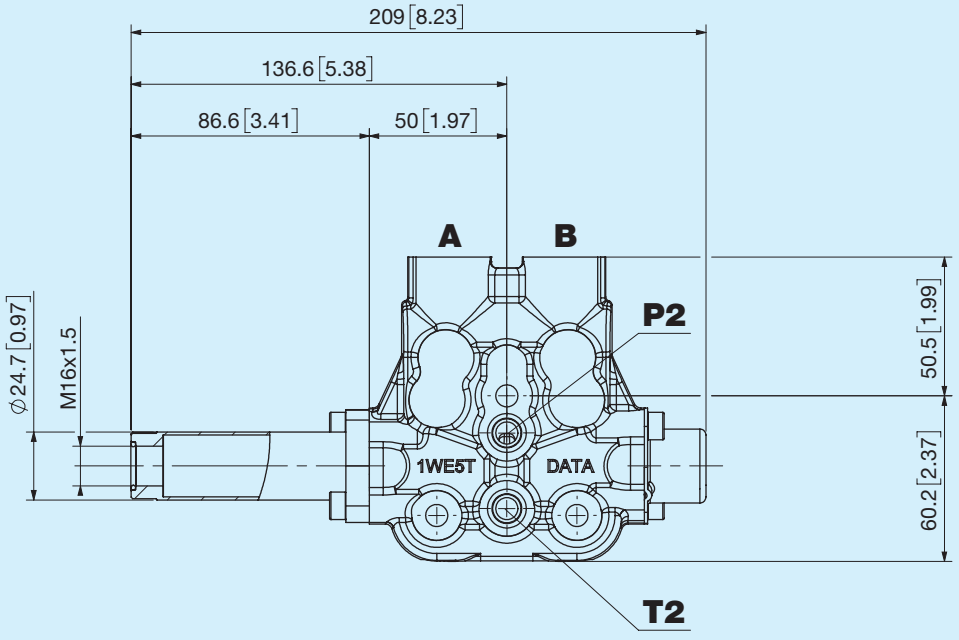

001 Spool type

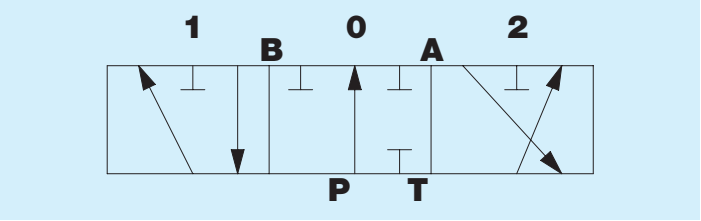

Positions

1	0	2
P → B A → T BP ⊣	A, B, T ⊣ BP →	P → A B → T BP ⊣

003 Spool type

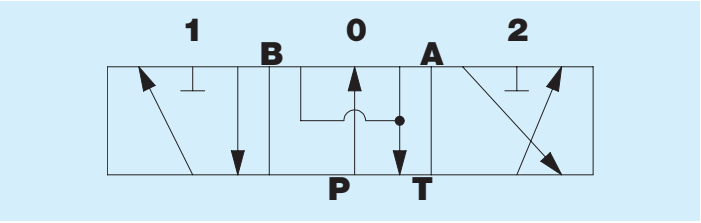

1	0	2
P → B A → T BP ⊣	A, B → T BP →	P → A B → T BP ⊣

004 Spool type

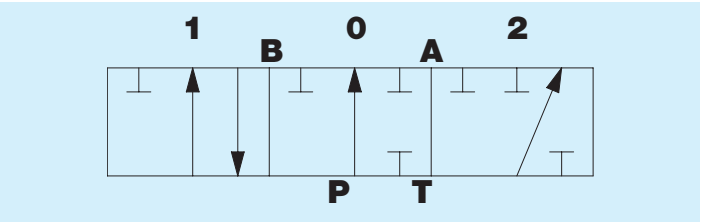

1	0	2
B ⊣ A → T BP →	A, B, T ⊣ BP →	P → A B, T, BP ⊣

005 Spool type

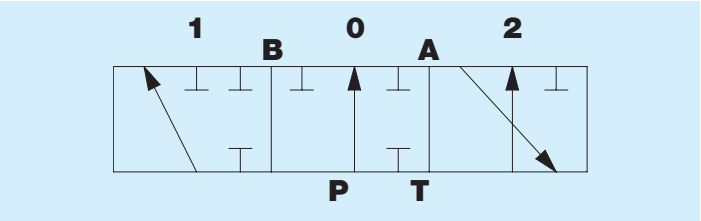

1	0	2
P → B A, T, BP ⊣	A, B, T ⊣ BP →	B → T A ⊣ BP →

Performance limits for spool type

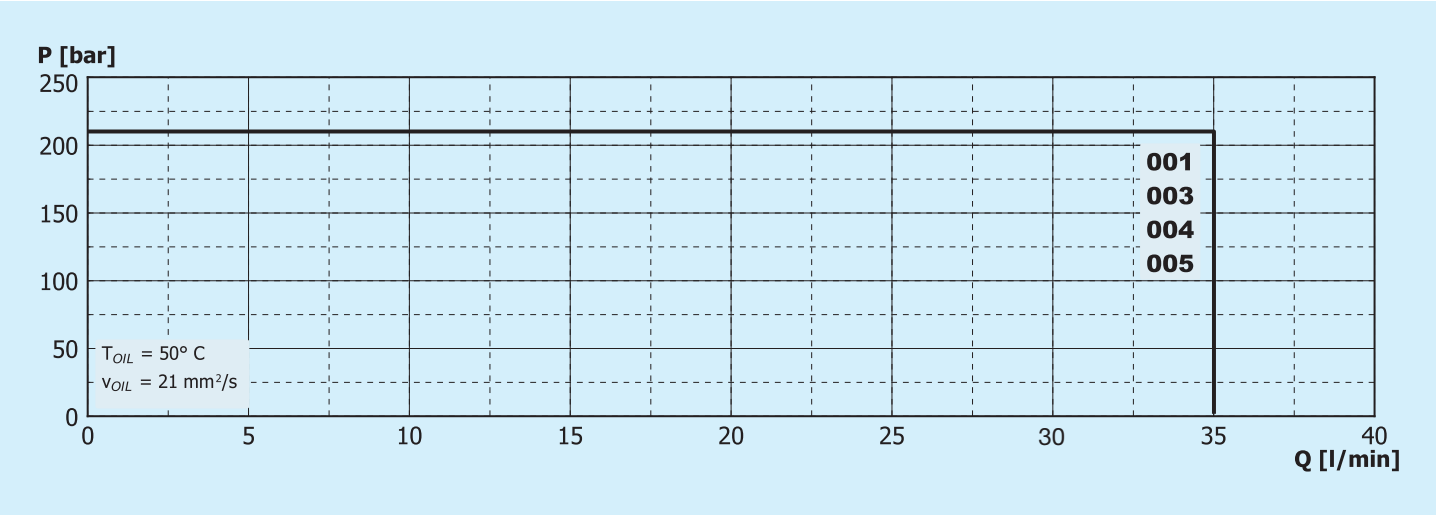

0A

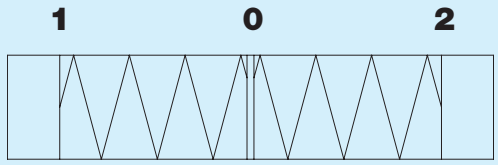

Neutral position in 0

0B

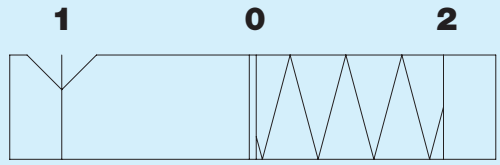

Neutral position in 0, detent in 1

0C

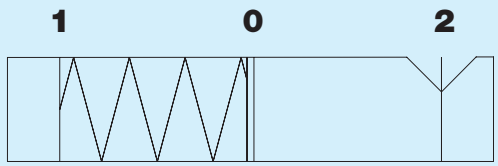

Neutral position in 0, detent in 2

0D

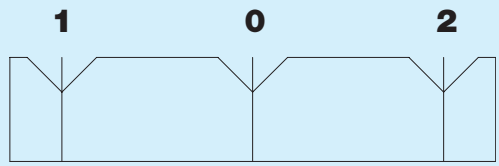

detent in 0, 1, 2

VL Relief valve port A

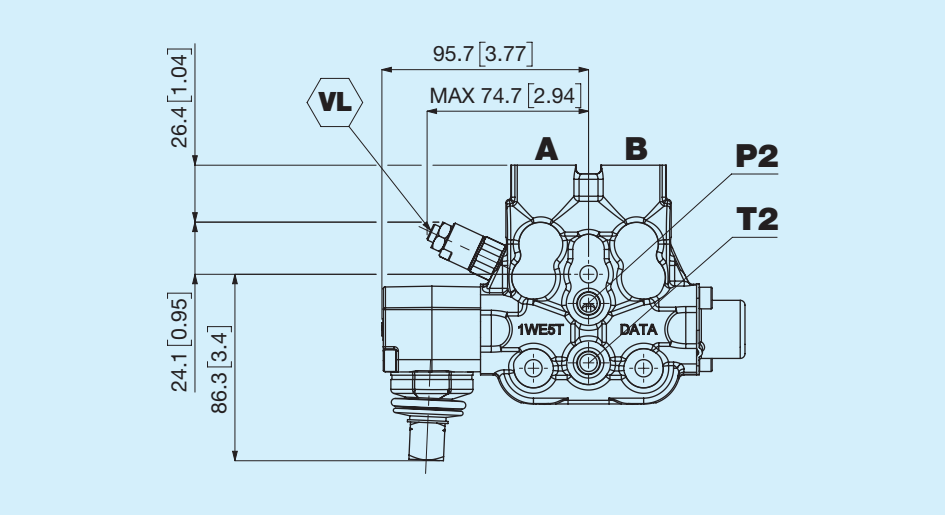

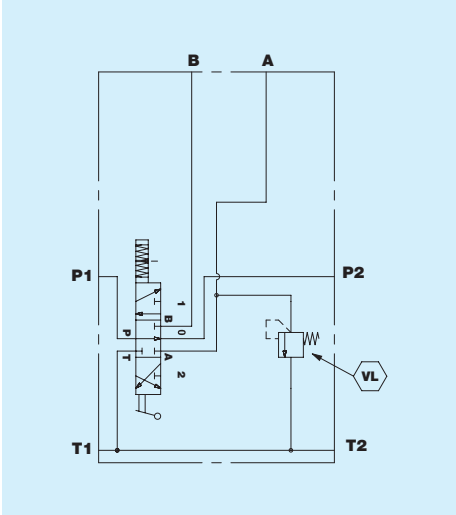

VL Relief valve port B

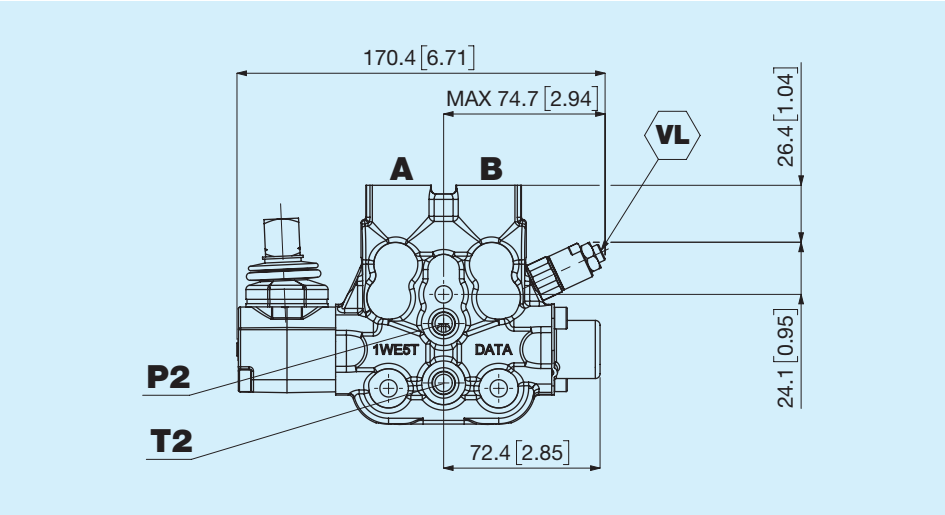

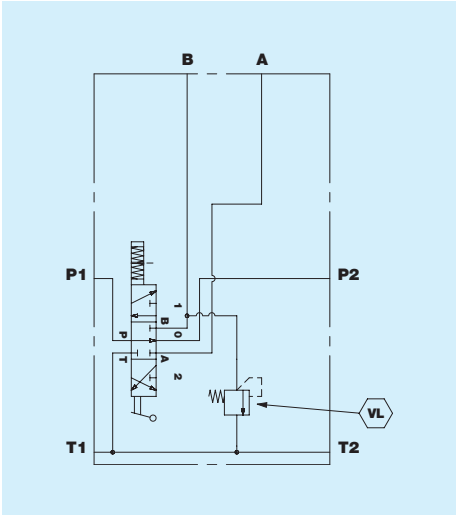

VB Pilot operated check valve port A

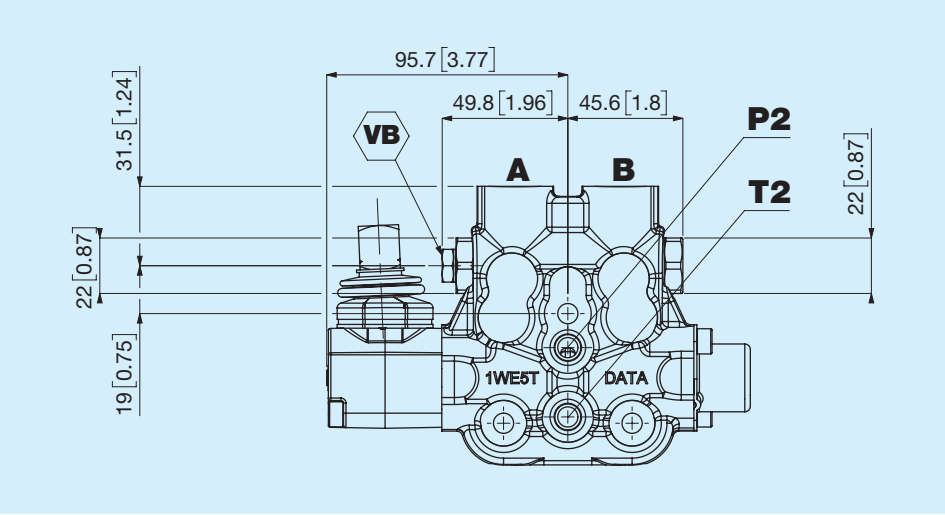

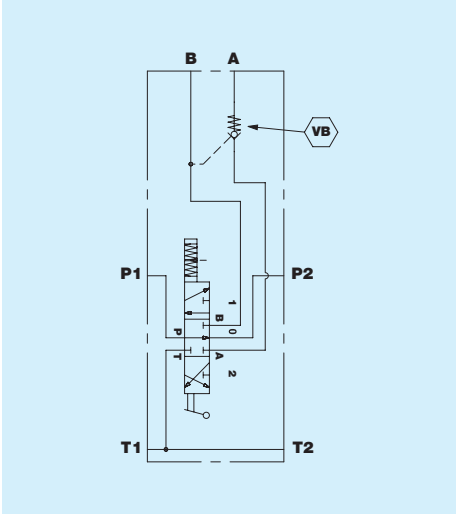

VB Pilot operated check valve port B

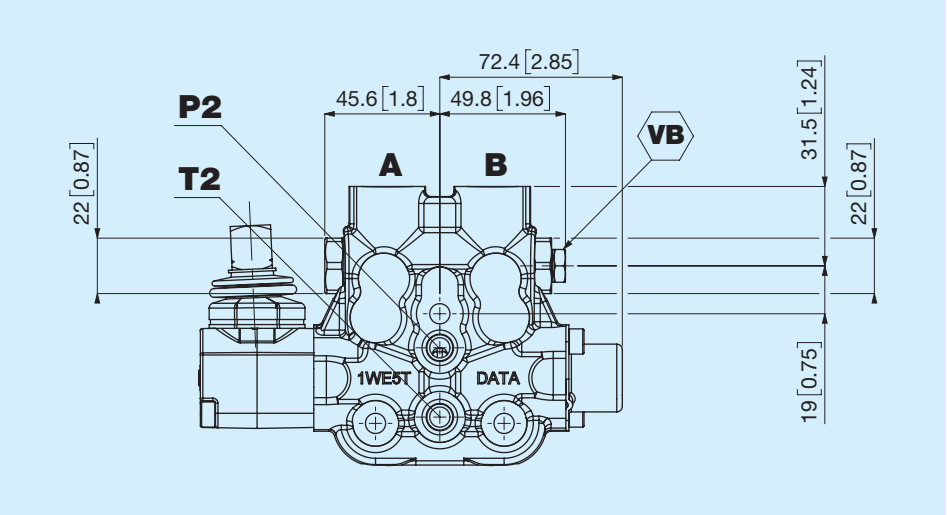

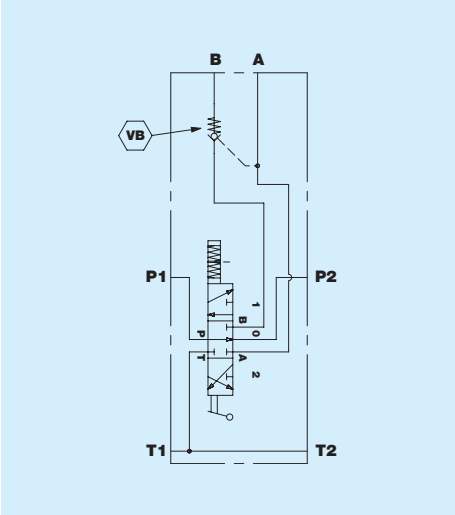

FC One-way flow regulator port A

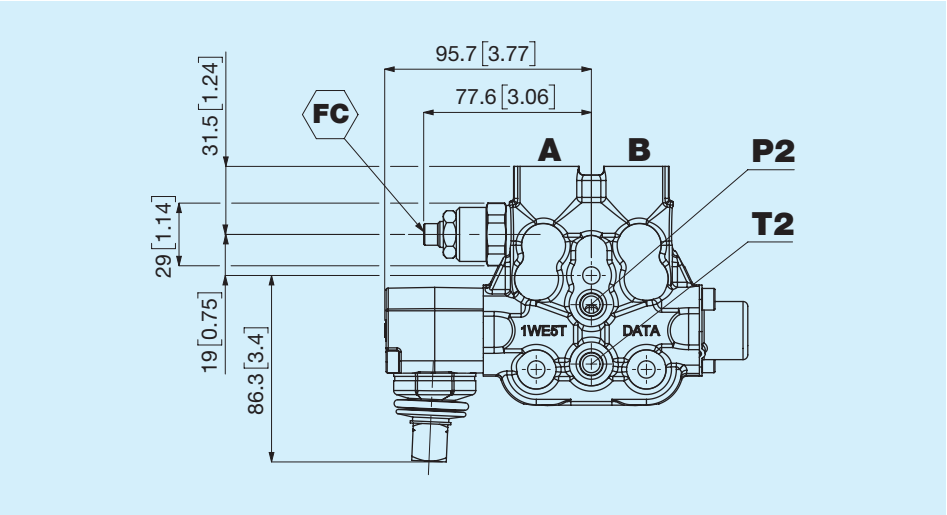

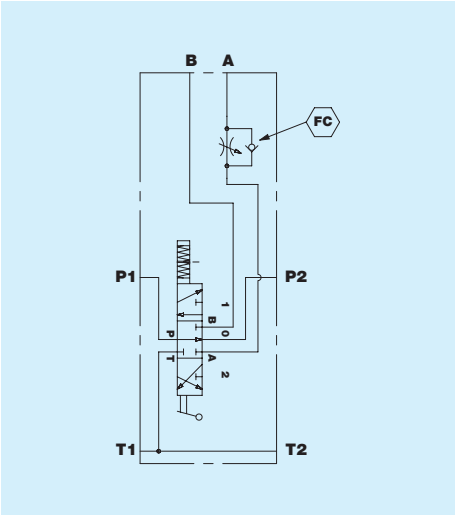

FC One-way flow regulator port B

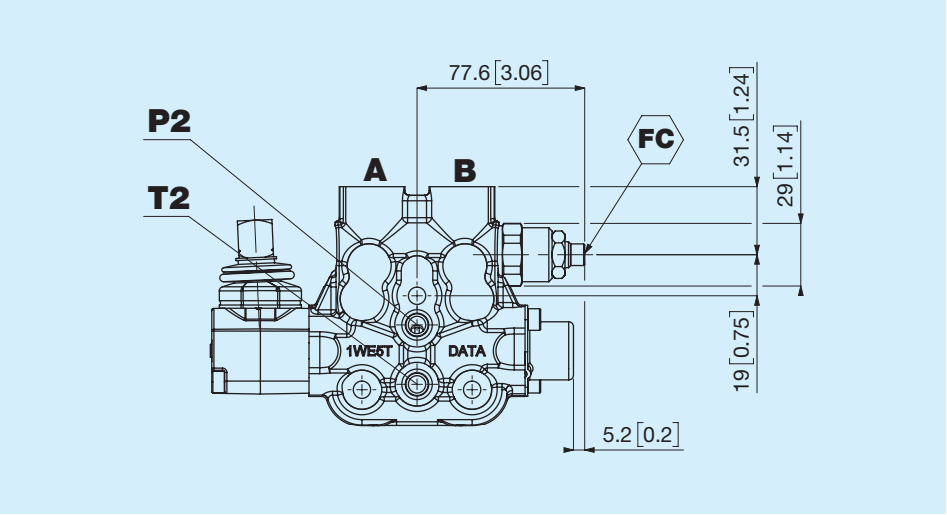

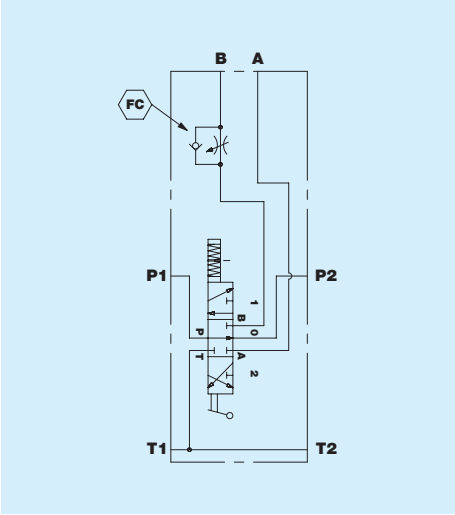

OV Over-center port A

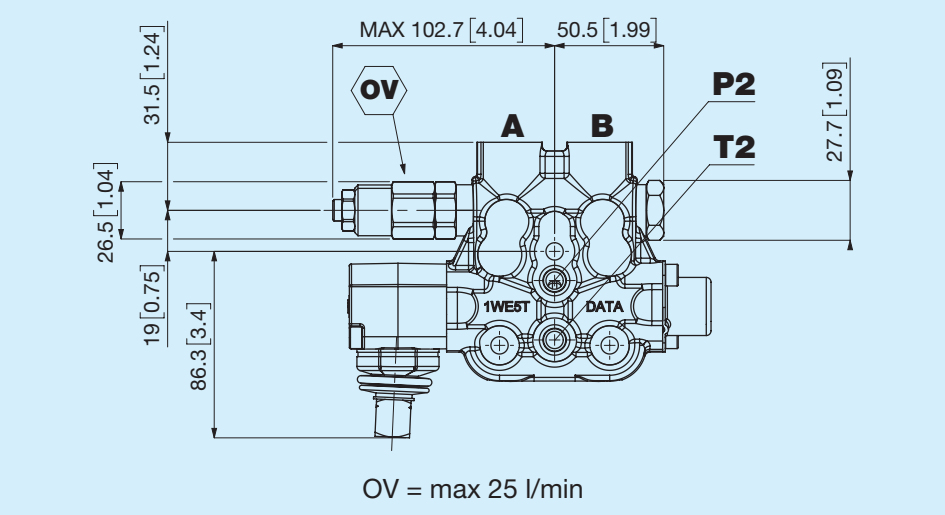

OV = max 25 l/min

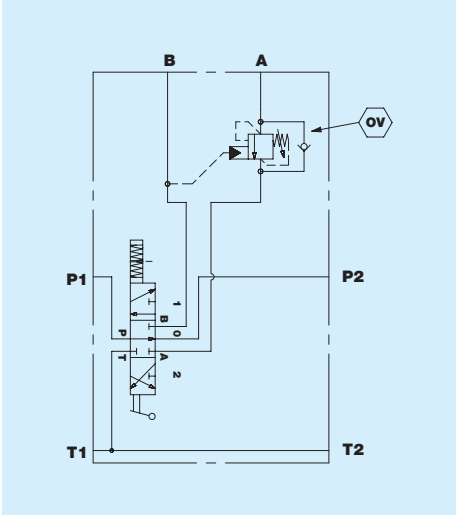

OV Over-center port B

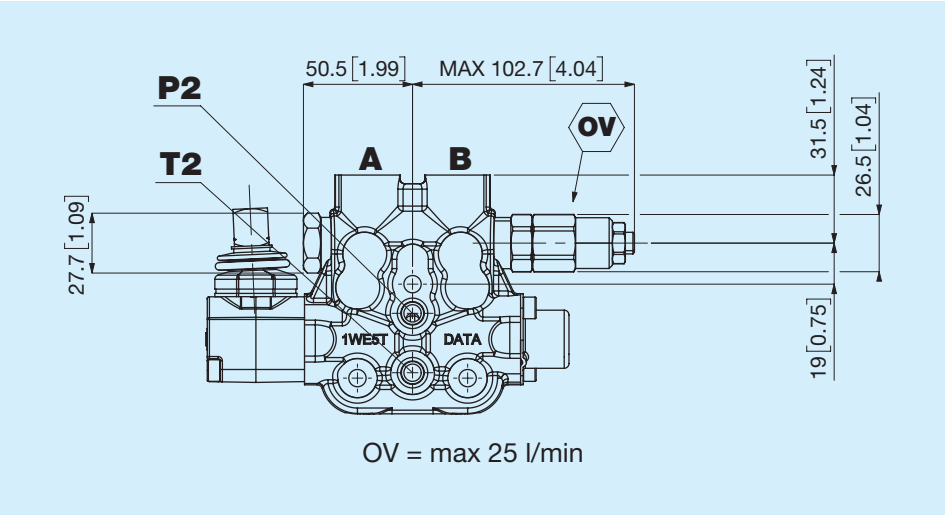

OV = max 25 l/min

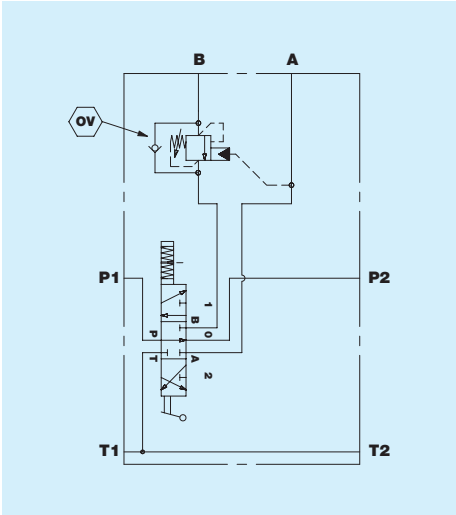

PC Crossed pressure limiter and anticavitation valve

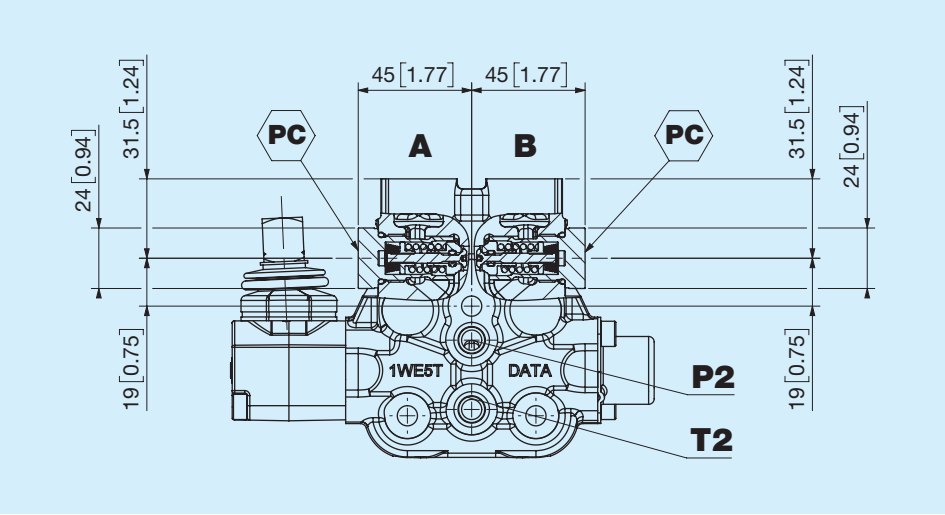

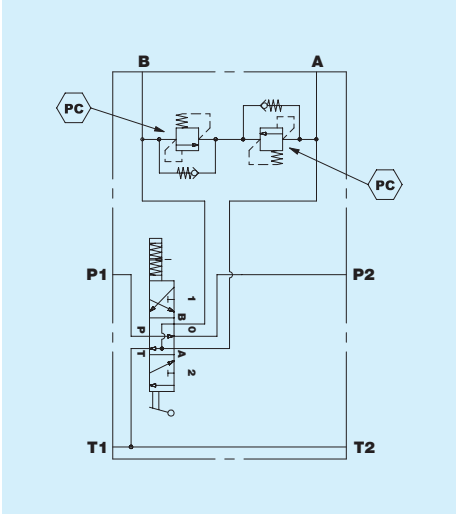

Valve type port A - B

Possible valve combinations port A and B

Port A	Port B					
	NN	VL	VB	FC	OV	PC
NN	•	•	•	•	•	
VL	•	•		•		
VB	•		•			
FC	•	•		•		
OV	•				•	
PC						•

NN None
VL Relief valve
VB Pilot operated check valve
NE Solenoid operated valve 2/2
OV Over-center
PC Crossed pressure limiter and anticavitation valve

Straight standard knob

Model	Description	h [mm]	h [inch]
A	Straight standard knob	110	4.33
B	Straight standard knob	130	5.12
C	Straight standard knob	180	7.09
D	Straight standard knob	210	8.27
E	Straight standard knob	250	9.84
F	Straight standard knob	300	11.81

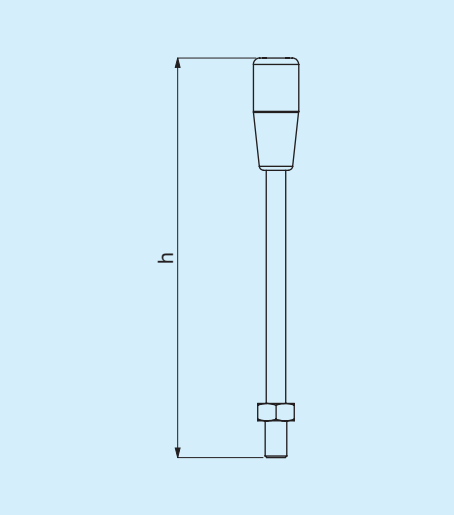

Ergonomic lever

Model	Description	h [mm]	h [inch]
L	Straight vertical	180	7.09
O	Bent 15° vertical	180	7.09
R	Bent 30° vertical	180	7.09
M	Straight horizontal	180	7.09
Y	Bent 15° horizontal	180	7.09
Q	Bent 30° horizontal	180	7.09

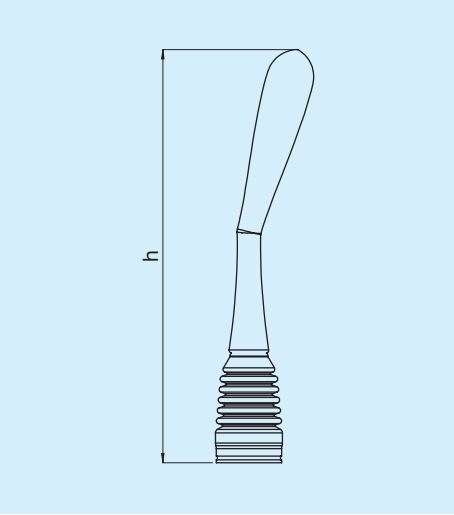

Instructions for ordering

BW0500TM	1	2	3	4	5	6	7	8	9	10	11	12	13	14	15	16

1

Element type

A	Tandem	**B**	Closing element

2

Configuration

A	Actuator side port A	**B**	Actuator side port B

3

Thread type

F	Female

4

Thread port A and B

A	3/8'' GAS ISO 1179	**C**	M18x1.5 ISO 9974	**W**	M18x1.5 ISO 6149	**E**	3/4'' - 16 SAE ISO 11926

5

Actuator

L	Standard kit for lever holder	**A**	Without lever holder standard appendix	**T**	Cable actuator setting

6 7 8

Spool types

001	Spool type	**003**	Spool type	**004**	Spool type	**005**	Spool type

9

Spool options

A	Standard spool	**B**	Nickel-plated spool

10 11

Positioner

0A	Neutral position in 0	**0B**	Neutral position in 0, detent in 1	**0C**	Neutral position in 0, detent in 2	**0D**	detent in 0, 1, 2

12 13

Valve type port A

NN	None	**VB**	Pilot operated check valve	**OV**	Over-center
VL	Relief valve	**FC**	One-way flow regulator	**PC**	Crossed pressure limiter and anticavitation valve

14 15

Setting VL/OV/RC valve port A

NN	None	**09**	90 bar	**16**	160 bar	**23**	230 bar
03	30 bar	**10**	100 bar	**17**	170 bar	**24**	240 bar
04	40 bar	**11**	110 bar	**18**	180 bar	**25**	250 bar
05	50 bar	**12**	120 bar	**19**	190 bar	**26**	260 bar
06	60 bar	**13**	130 bar	**20**	200 bar	**27**	270 bar
07	70 bar	**14**	140 bar	**21**	210 bar		
08	80 bar	**15**	150 bar	**22**	220 bar		

16 17

Valve type port B

NN	None	**VB**	Pilot operated check valve	**OV**	Over-center
VL	Relief valve	**FC**	One-way flow regulator	**PC**	Crossed pressure limiter and anticavitation valve

17	18	19	20	21	22	23

18	19

Setting VL/OV/RC valve port B

NN	None	**09**	90 bar	**16**	160 bar	**23**	230 bar
03	30 bar	**10**	100 bar	**17**	170 bar	**24**	240 bar
04	40 bar	**11**	110 bar	**18**	180 bar	**25**	250 bar
05	50 bar	**12**	120 bar	**19**	190 bar	**26**	260 bar
06	60 bar	**13**	130 bar	**20**	200 bar	**27**	270 bar
07	70 bar	**14**	140 bar	**21**	210 bar		
08	80 bar	**15**	150 bar	**22**	220 bar		

20

Lever options

N	None	**B**	h 130 mm/ 5.12 inch	**F**	h 300 mm/11.81 inch	**R**	Bent 30° vertical
S	Without lever	**C**	h 180 mm/ 7.09 inch	**Q**	Bent 30° horizontal	**M**	Straight horizontal
Q	Bent 30° horizontal	**D**	h 210 mm/8.27 inch	**L**	Straight vertical	**Y**	Bent 15° horizontal
A	h 110 mm/ 4.33 inch	**E**	h 250 mm/9.84 inch	**O**	Bent 15° vertical	**Q**	Bent 30° horizontal

21

Lever holder position

A	Straight	**C**	Rotated 180°	**N**	None

22

Voltage and connector

N	None

23

External treatment

N	None	**Z**	Zinc plating