Variable-displacement pumps

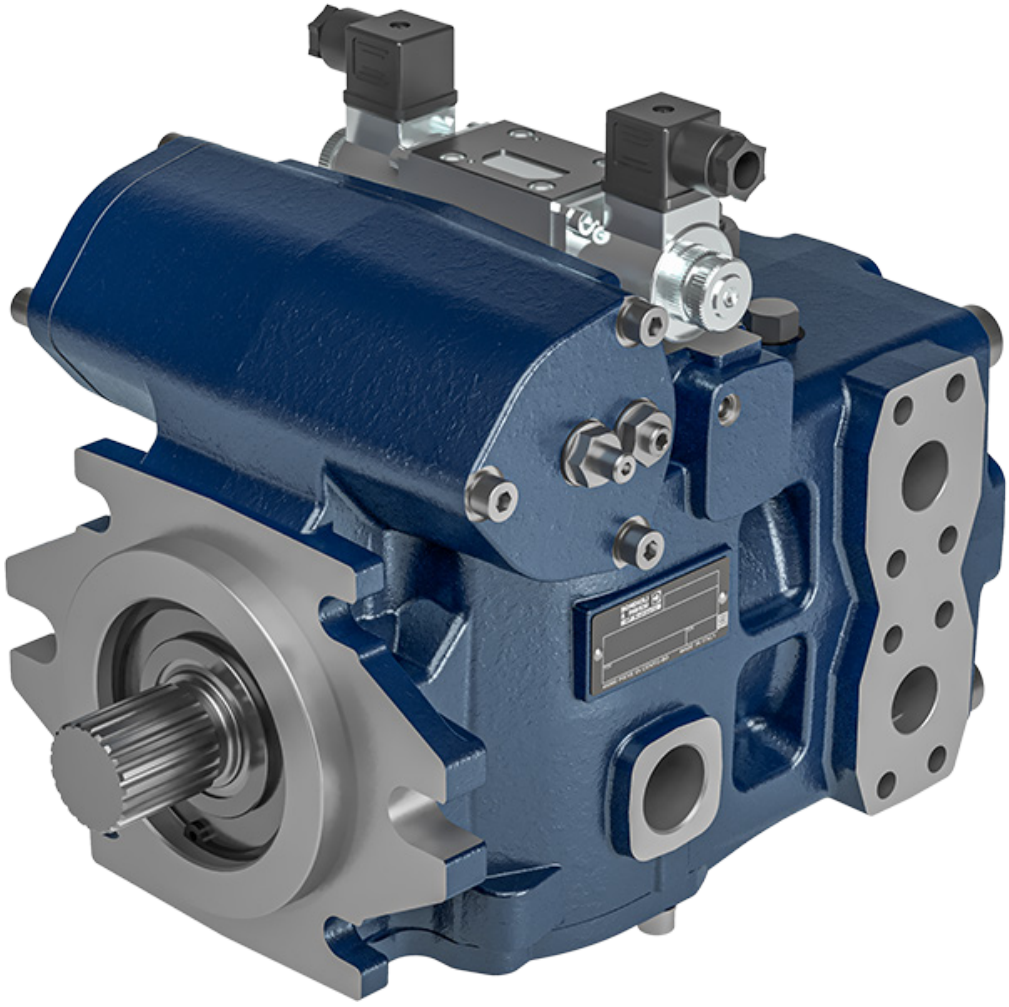

Before use, carefully read the GENERAL INSTRUCTIONS FOR USE OF CLOSED CIRCUIT AXIAL PISTON PUMPS AND MOTORS.

Dimensions and technical data

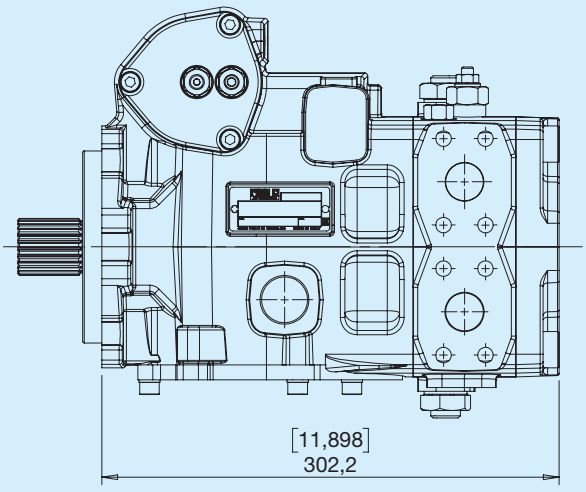

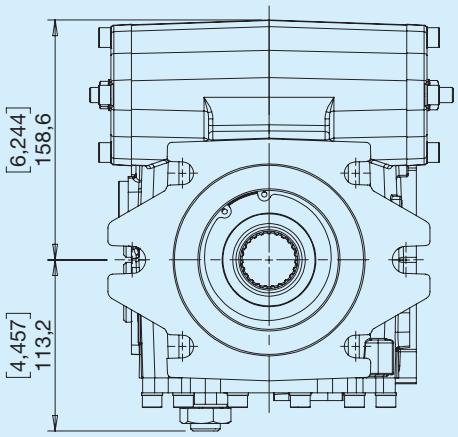

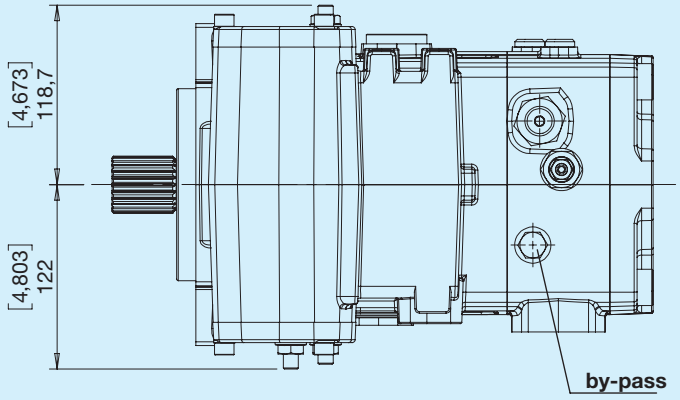

HPP8	Nominal displacement		Swash plate	Continuous pressure		Intermittent pressure		Peak pressure		Rotational speed		Weight	
	cm^3	**in^3**	**°**	**bar**	**psi**	**bar**	**psi**	**bar**	**psi**	**MAX min^{-1}**	**MIN min^{-1}**	**kg**	**lbs**
082	82	5.0	18.0	400	5800	420	6090	450	6525	3000	500	55	121
100	100	6.1	16.5	400	5800	420	6090	450	6525	3000	500	55	121
125	125	7.6	20.0	400	5800	420	6090	450	6525	3000	500	56	123

Feed pump

Type	Feed pump displacement		Pressure	
	cm^3	**in^3**	**bar**	**psi**
HPP8 082	18	1.1	22	319
HPP8 100	18	1.1	22	319
HPP8 125	18	1.1	22	319

E SAE C (2+4 holes)

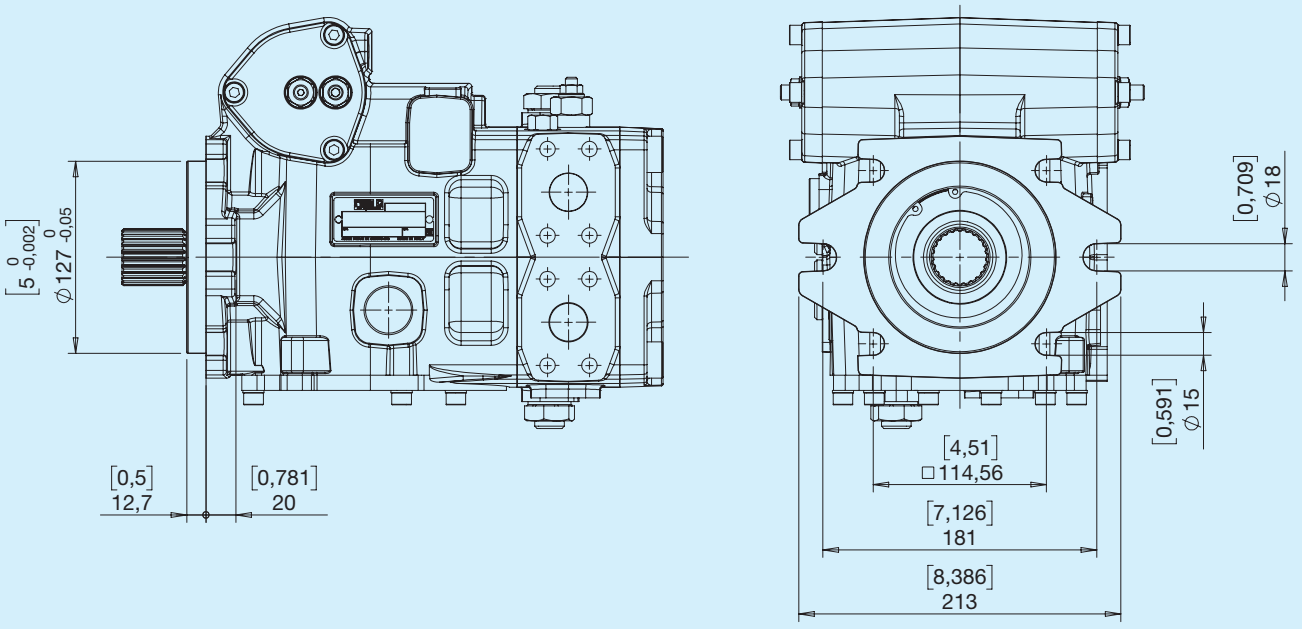

3 SAE 14T 12/24 DP

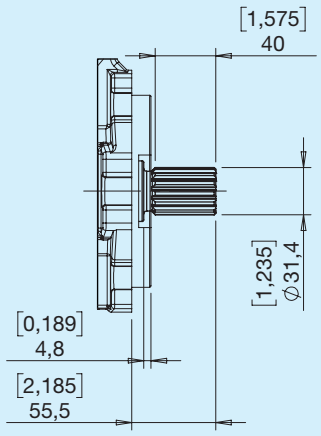

Max. torque 850 Nm

7 SAE 21T 16/32 DP

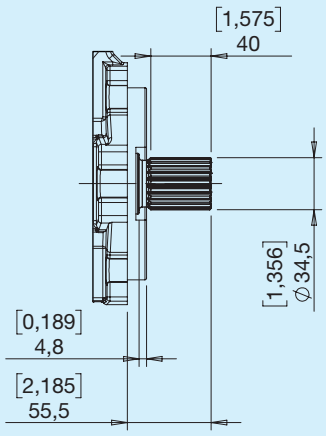

Max. torque 1100 Nm

8 SAE 23T 16/32 DP

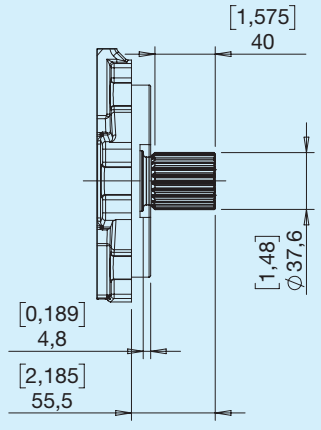

Max. torque 1300 Nm

9 SAE 13T 8/16 DP

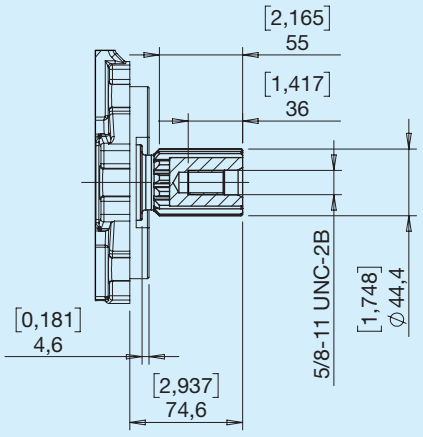

Max. torque 2400 Nm

Position of ports

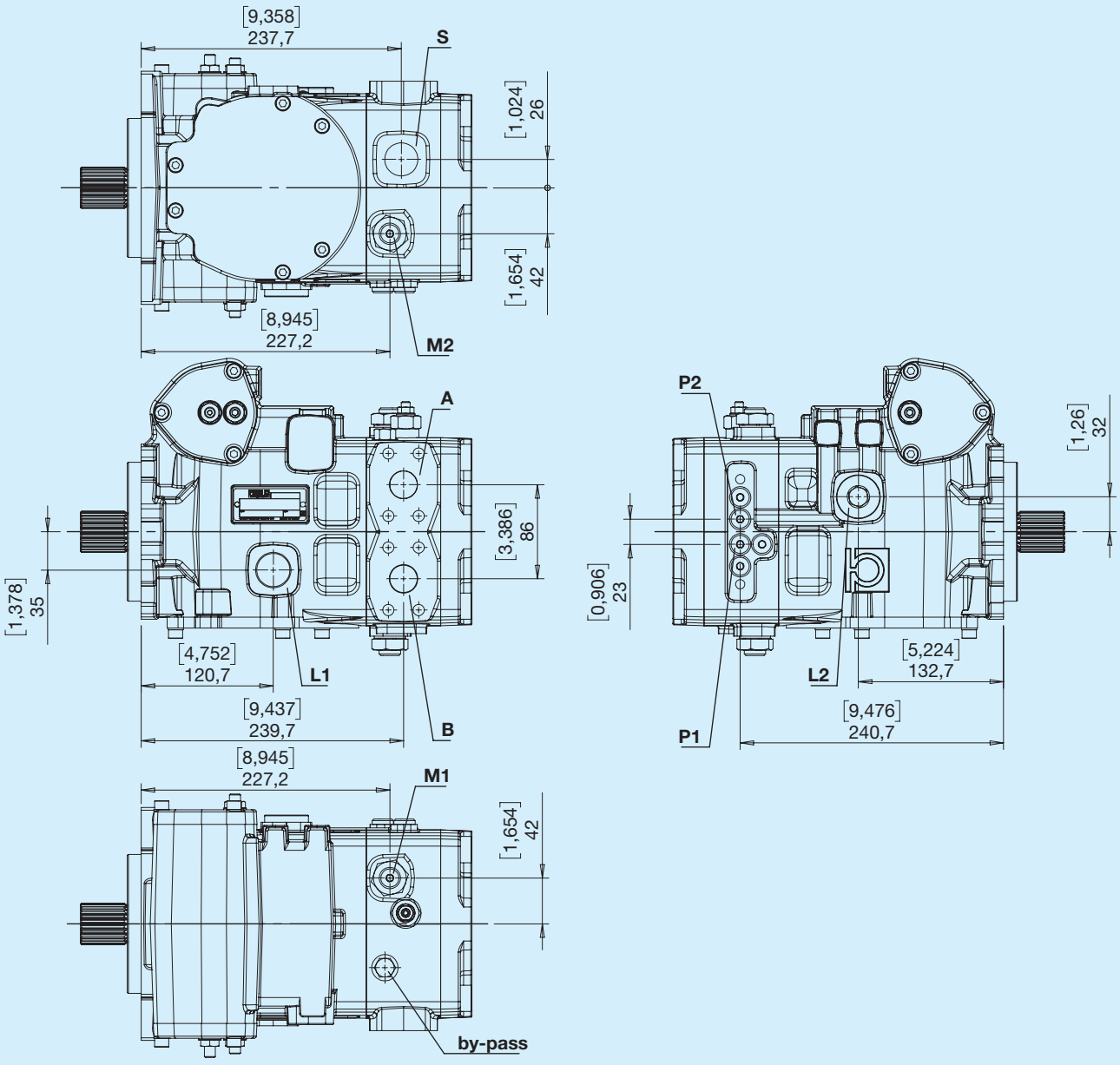

A,B - Use
L1, L2 - Drain port
S - Inlet
P - Pressure intake
M1, M2 - Manometer intake

Type G

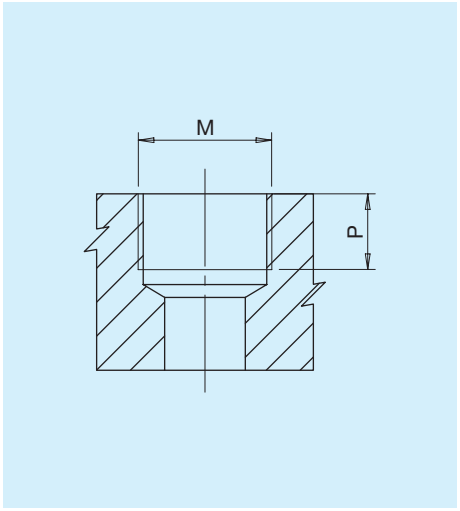

Type	M		P	
		Nm	**mm**	**in**
G2	Port ISO 1179-1 - G 1/4	17	12	0.47
G7	Port ISO 1179-1 - G 1	160	18	0.75

Type U

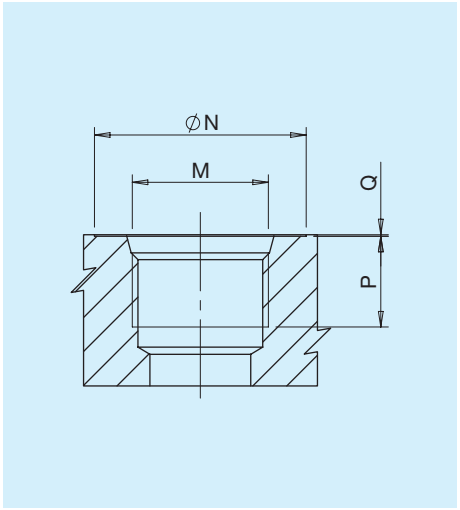

Type	Dim.	N		P		Q		M	
		mm	**in**	**mm**	**in**	**mm**	**in**		**Nm**
U2	1/4'	21	0.83	12	0.47	0.3	0.01	Port ISO 11926-1-7/16-20	17
U7	1'	49	1.93	18	0.70	0.3	0.01	Port ISO 11926-1-1 5/16-12	160

Type N

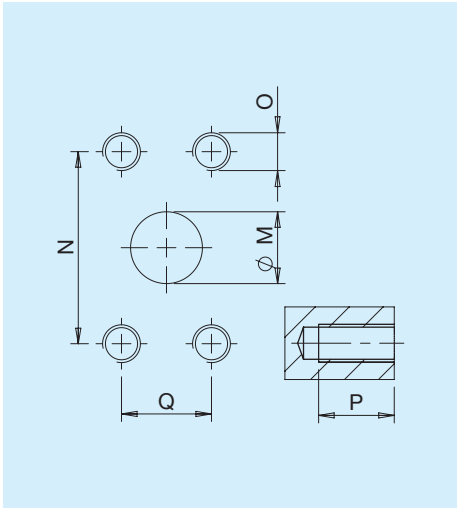

Type	M		N		Q		P		O	
	mm	**in**	**mm**	**in**	**mm**	**in**	**mm**	**in**		**Nm**
N7	25	1	57.15	2.25	27.76	1.09	20	0.79	M12	70

Combinations

Type	Inlet **S**	Outlet **A-B**	Drain **L1-L2**	Pilot pressure **a-b**	Pressure points **P1 - P2**	Pressure gauge sockets **M1 - M2**
G	G7	N7	G7	G2	G2	G2
U	U7	N7	U7	G2	G2	U2

N Electrical ON/OFF, open centre 12V

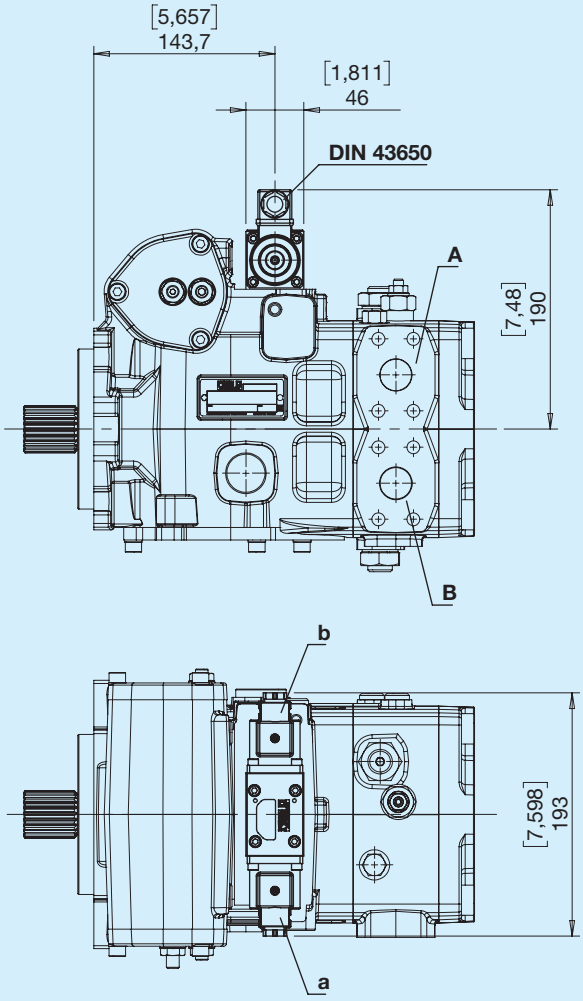

Available on request with DEUTSCH DT04-2P connectors

Outlet

Rotation	Excited solenoid	Outlet
Right	a	A
Right	b	B
Left	a	B
Left	b	A

Hydraulic diagram

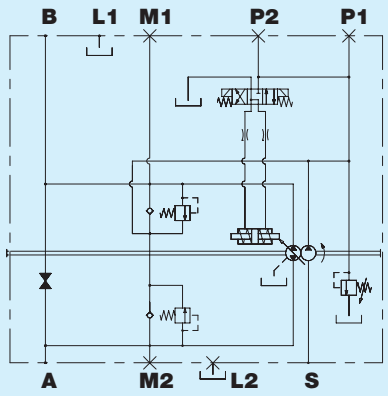

Q Electrical ON/OFF, open centre 24V

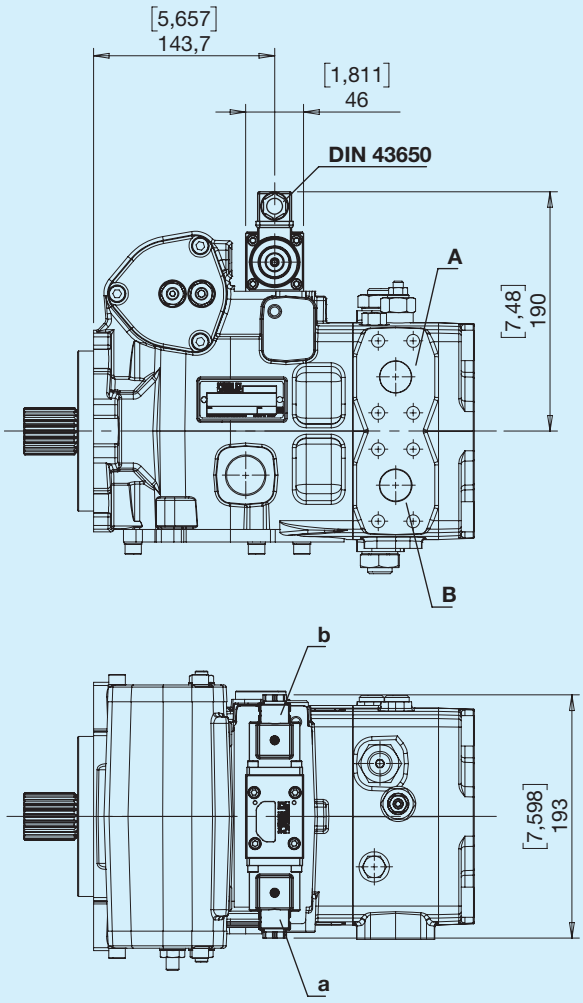

Available on request with DEUTSCH DT04-2P connectors

Outlet

Rotation	Excited solenoid	Outlet
Right	a	A
Right	b	B
Left	a	B
Left	b	A

Hydraulic diagram

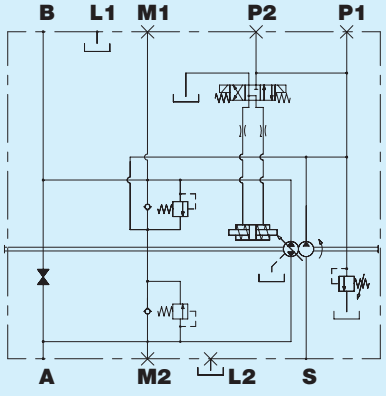

G Feedback hydraulic

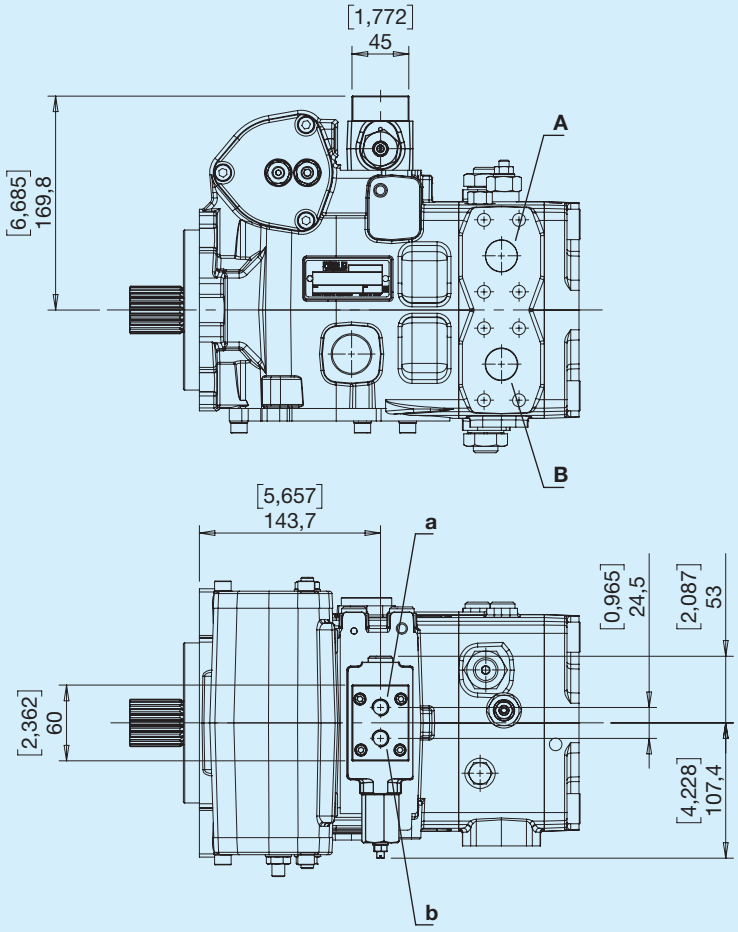

Outlet

Rotation	Pilot pressure	Outlet
Right	a	B
Right	b	A
Left	a	A
Left	b	B

Pilot pressure

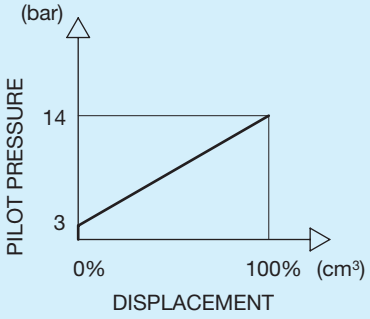

Hydraulic diagram

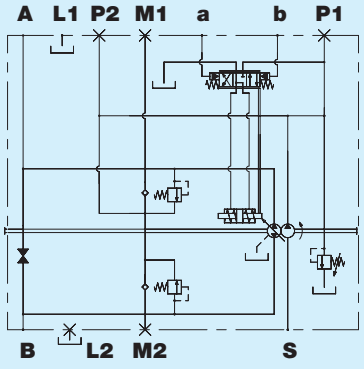

I Lever-operated hydraulic

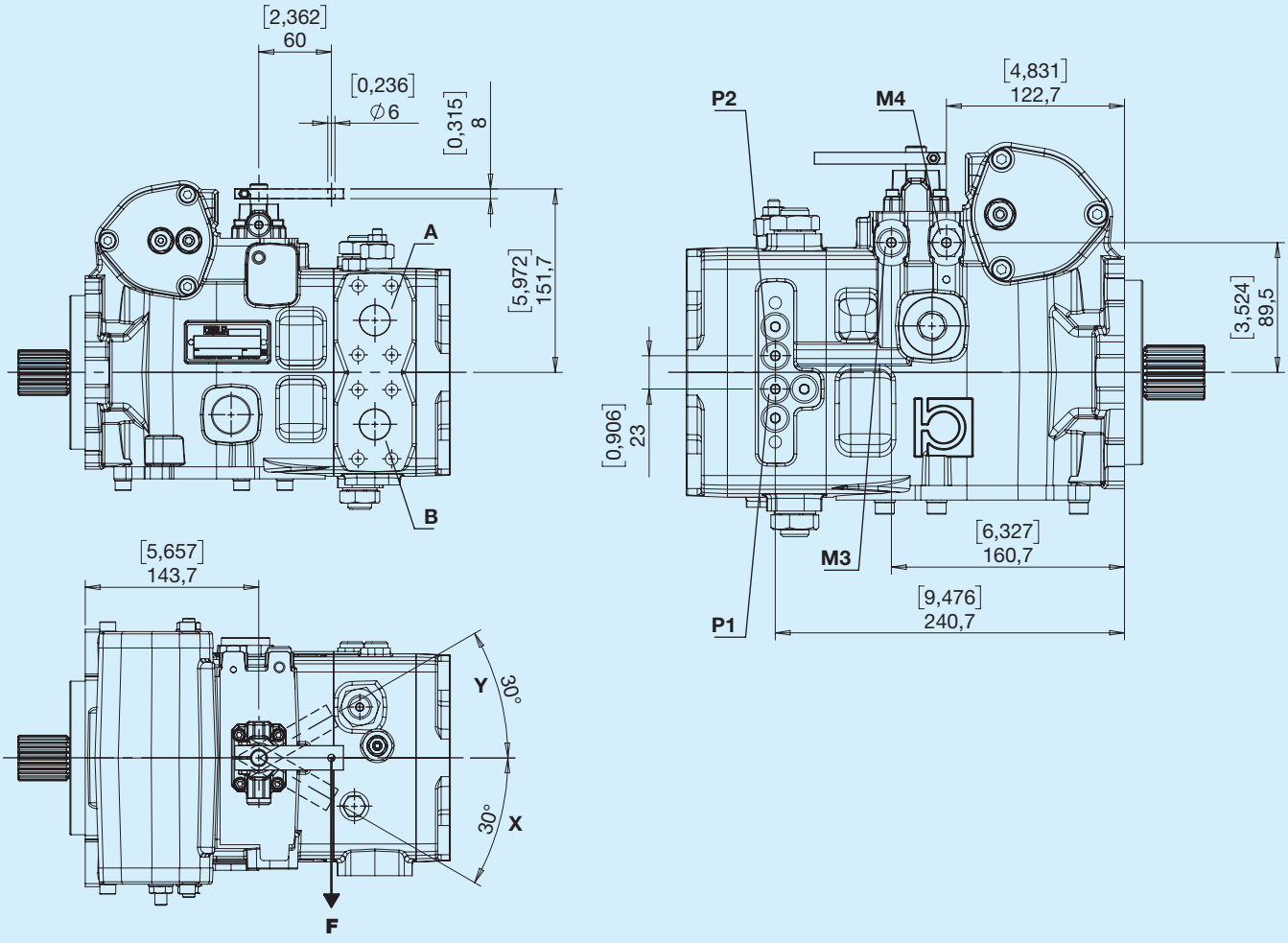

M3 - Intake restrictor
M4 - Outlet restrictor

Outlet

Rotation	Control lever	Outlet
Right	Y	B
Right	X	A
Left	Y	A
Left	X	B

Pilot pressure

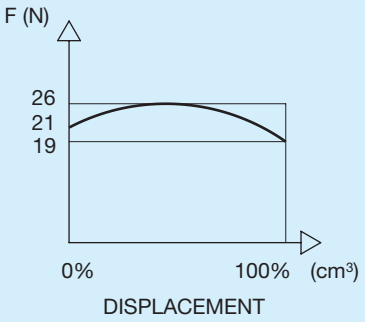

Hydraulic diagram

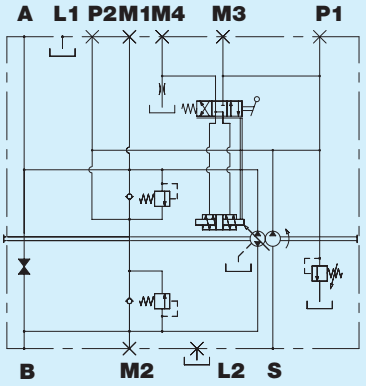

K Direct hydraulic

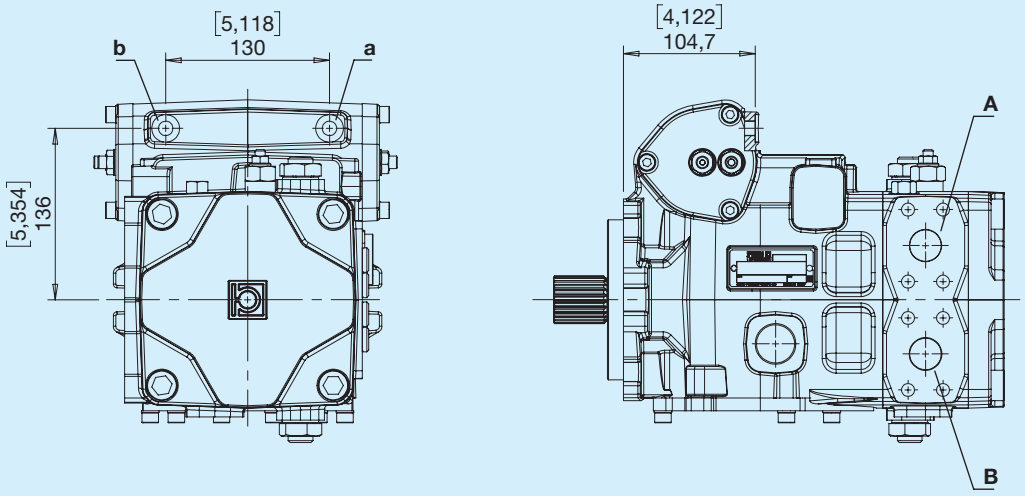

Outlet

Rotation	Pilot pressure	Outlet
Right	a	A
Right	b	B
Left	a	B
Left	b	A

Pilot pressure

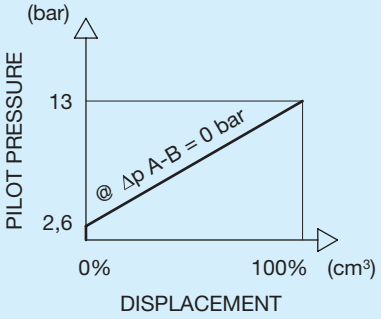

Hydraulic diagram

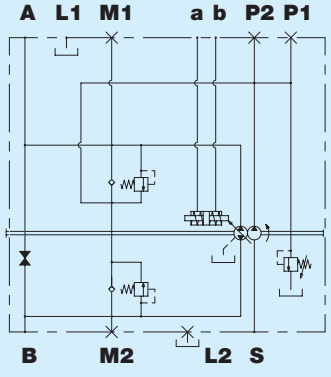

O Electronic proportional feedback control 12V

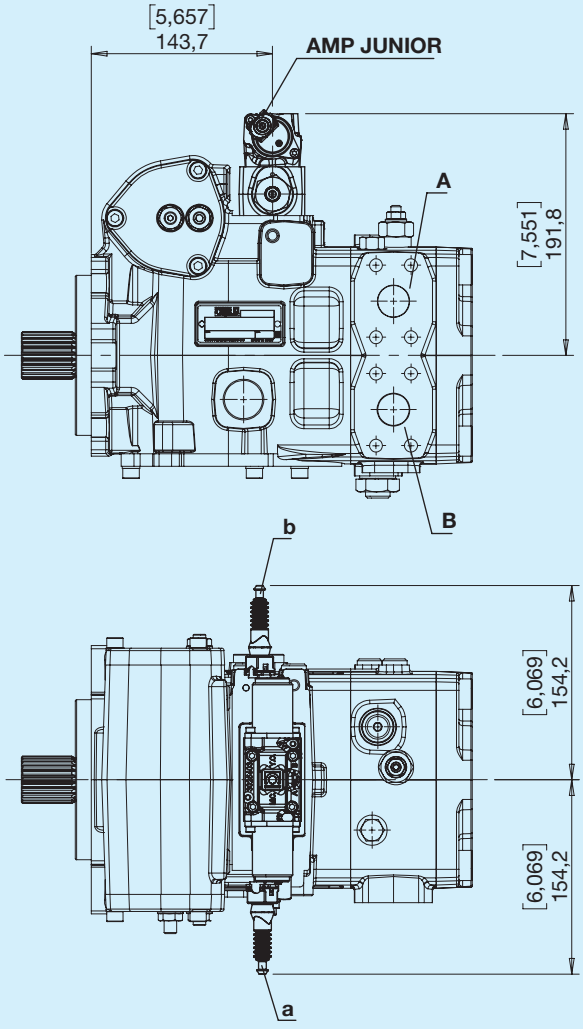

Available on request with DEUTSCH DT04-2P connectors

Outlet

Rotation	Excited solenoid	Outlet
Right	a	B
Right	b	A
Left	a	A
Left	b	B

Control

Rated voltage	12	V
Min. current (I1)	300	mA
Max. current (I2)	1500	mA
PWM frequency	100	Hz

Pilot pressure

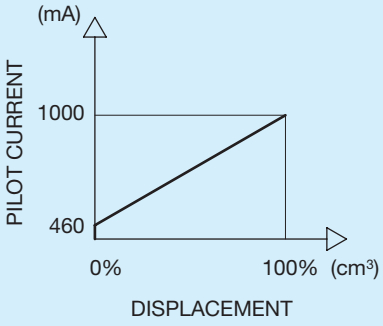

Hydraulic diagram

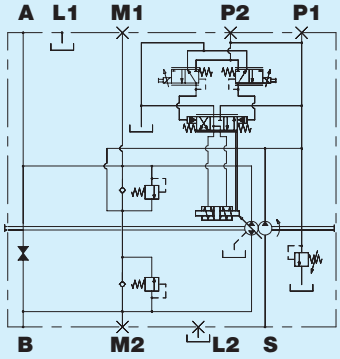

V Electronic proportional feedback control 24V

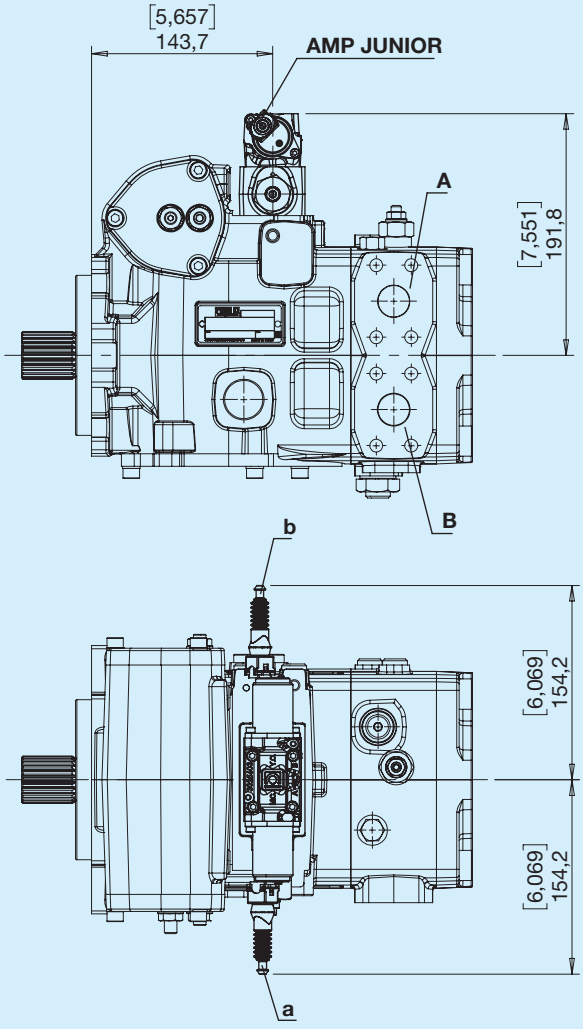

Available on request with DEUTSCH DT04-2P connectors

Outlet

Rotation	Excited solenoid	Outlet
Right	a	B
Right	b	A
Left	a	A
Left	b	B

Control

Rated voltage	24	V
Min. current (I1)	180	mA
Max. current (I2)	850	mA
PWM frequency	100	Hz

Pilot pressure

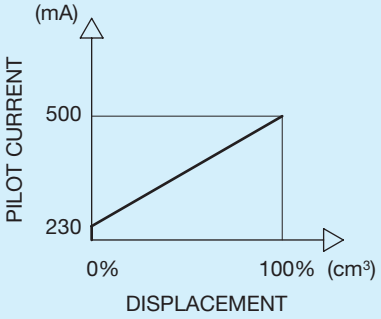

Hydraulic diagram

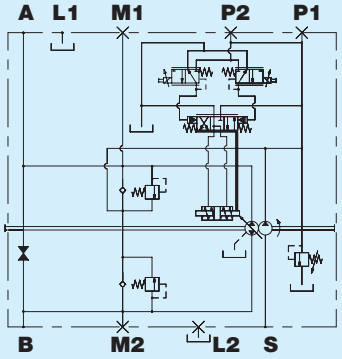

S Electronic proportional control 12V

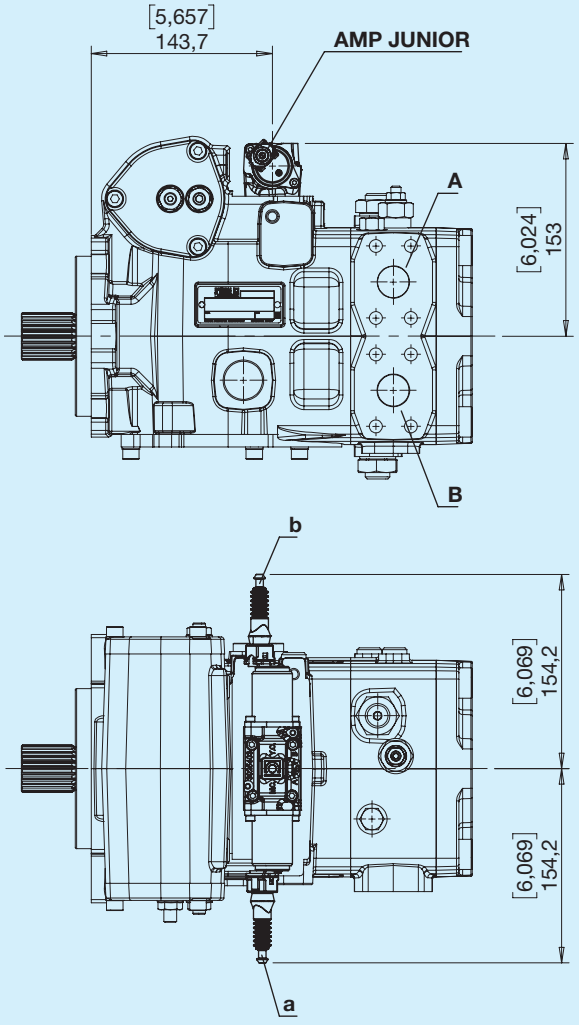

Available on request with DEUTSCH DT04-2P connectors

Outlet

Rotation	Excited solenoid	Outlet
Right	a	A
Right	b	B
Left	a	B
Left	b	A

Control

Rated voltage	12	V
Min. current (I1)	300	mA
Max. current (I2)	1500	mA
PWM frequency	100	Hz

Pilot pressure

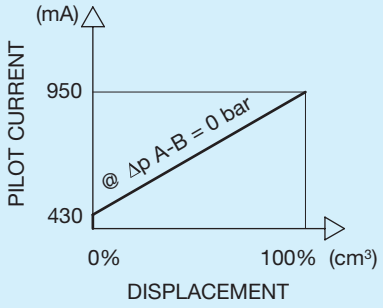

Hydraulic diagram

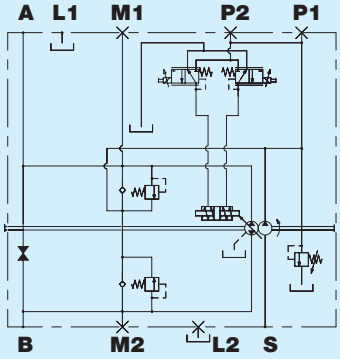

W Electronic proportional control 24 V

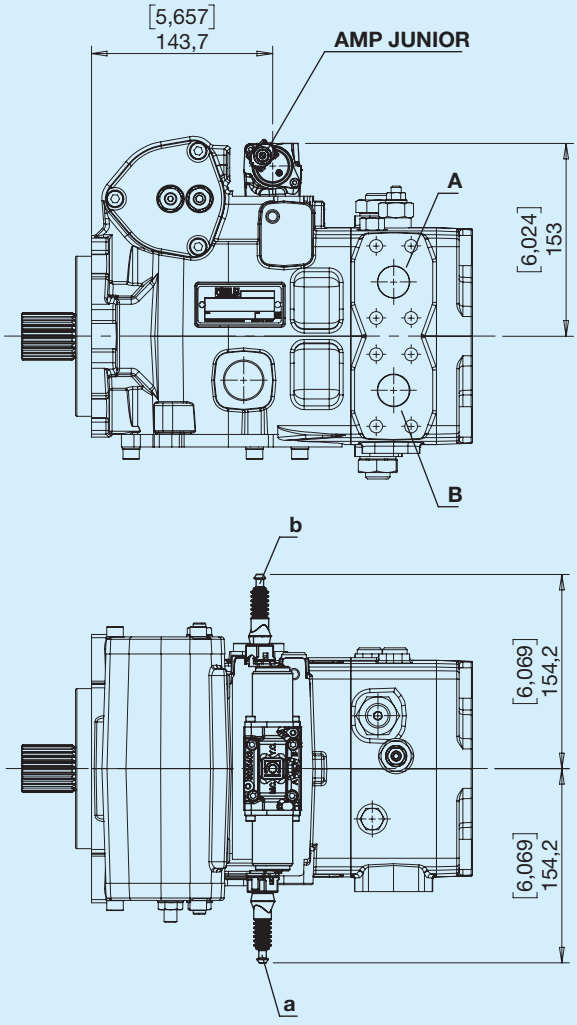

Available on request with DEUTSCH DT04-2P connectors

Outlet

Rotation	Excited solenoid	Outlet
Right	a	A
Right	b	B
Left	a	B
Left	b	A

Control

Rated voltage	24	V
Min. current (I1)	180	mA
Max. current (I2)	850	mA
PWM frequency	100	Hz

Pilot pressure

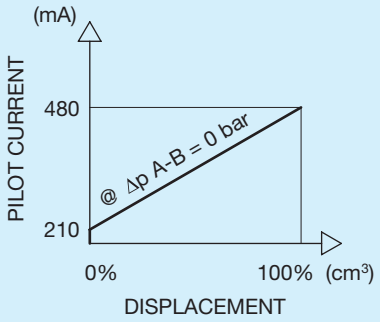

Hydraulic diagram

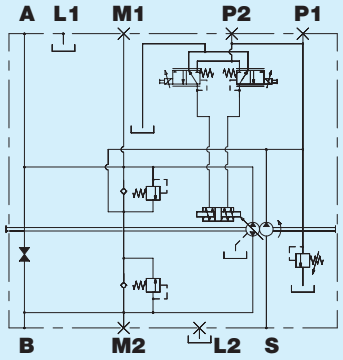

2 SAE A with boost pump

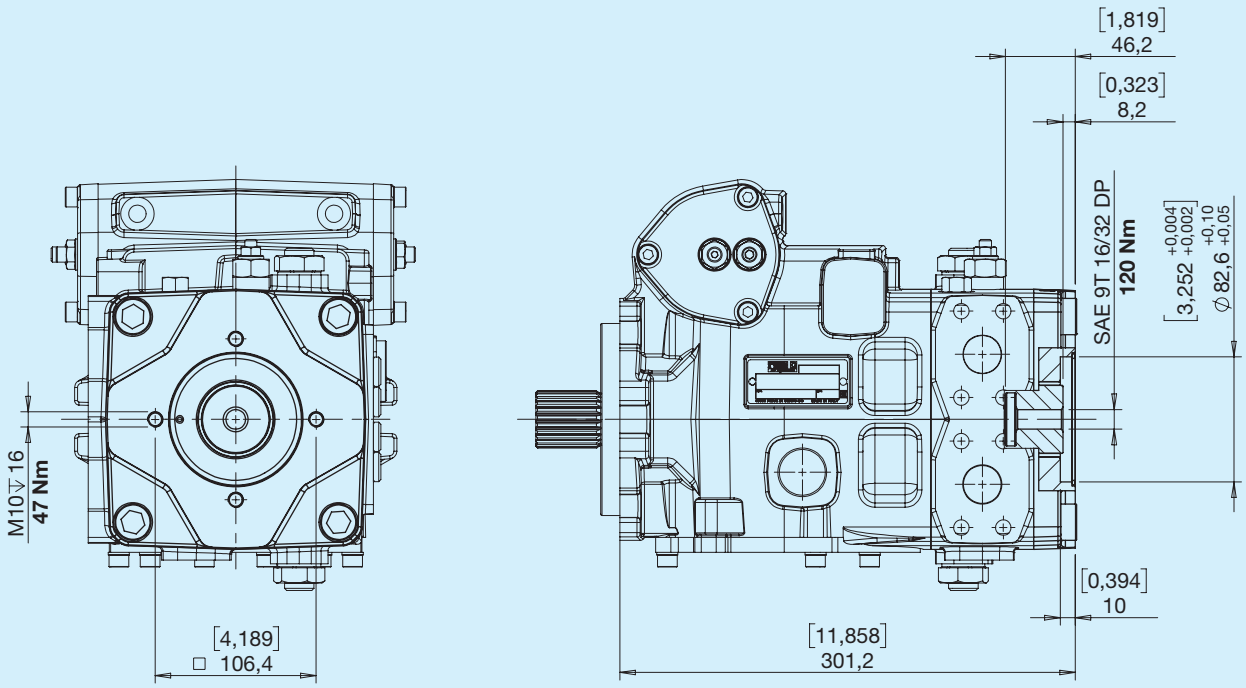

3 SAE B with boost pump

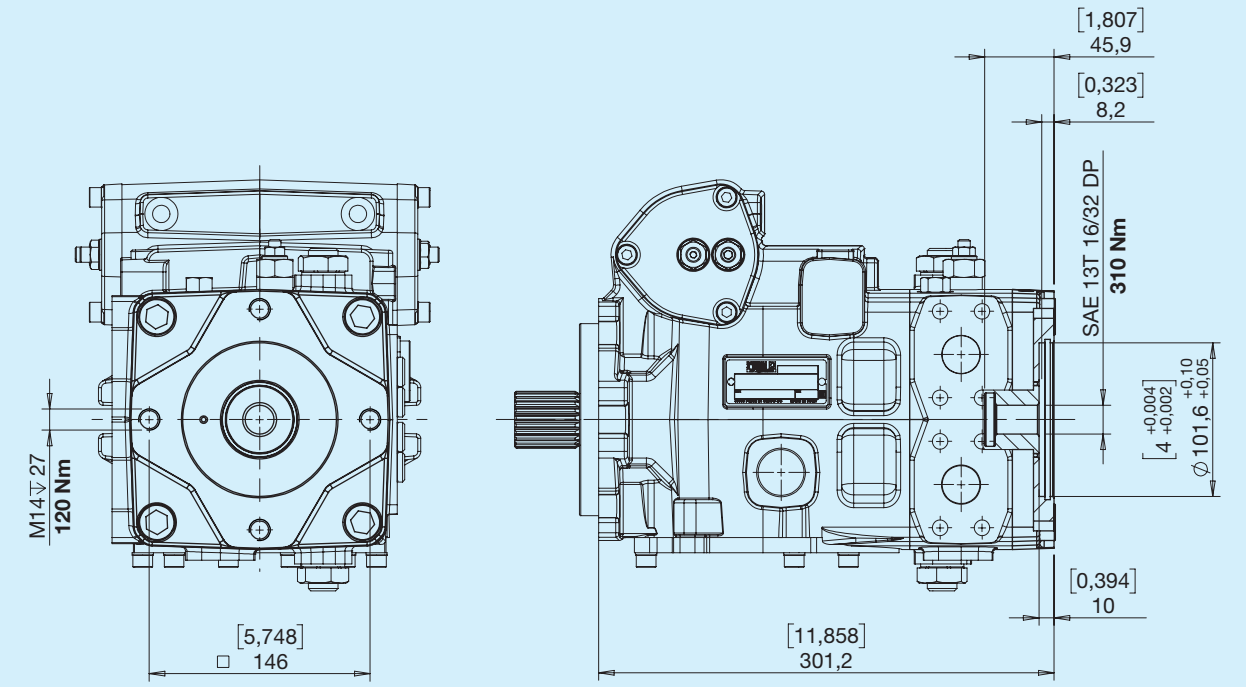

8 SAE B with boost pump

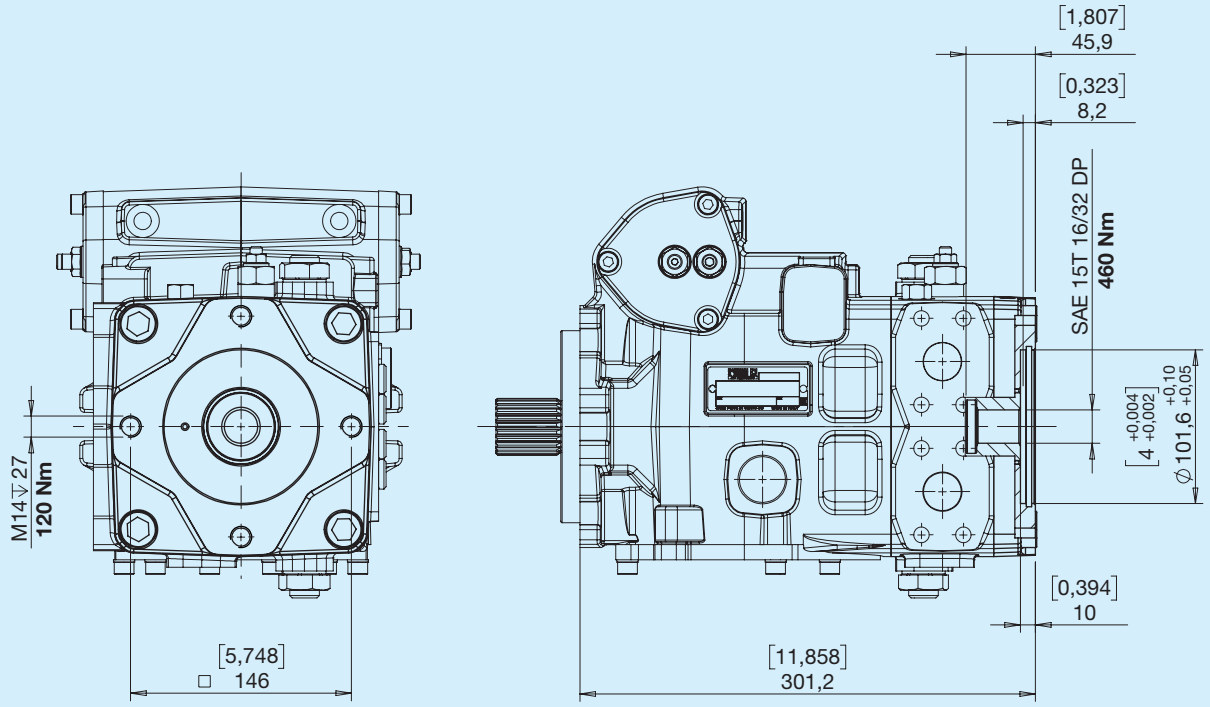

4 SAE C with boost pump

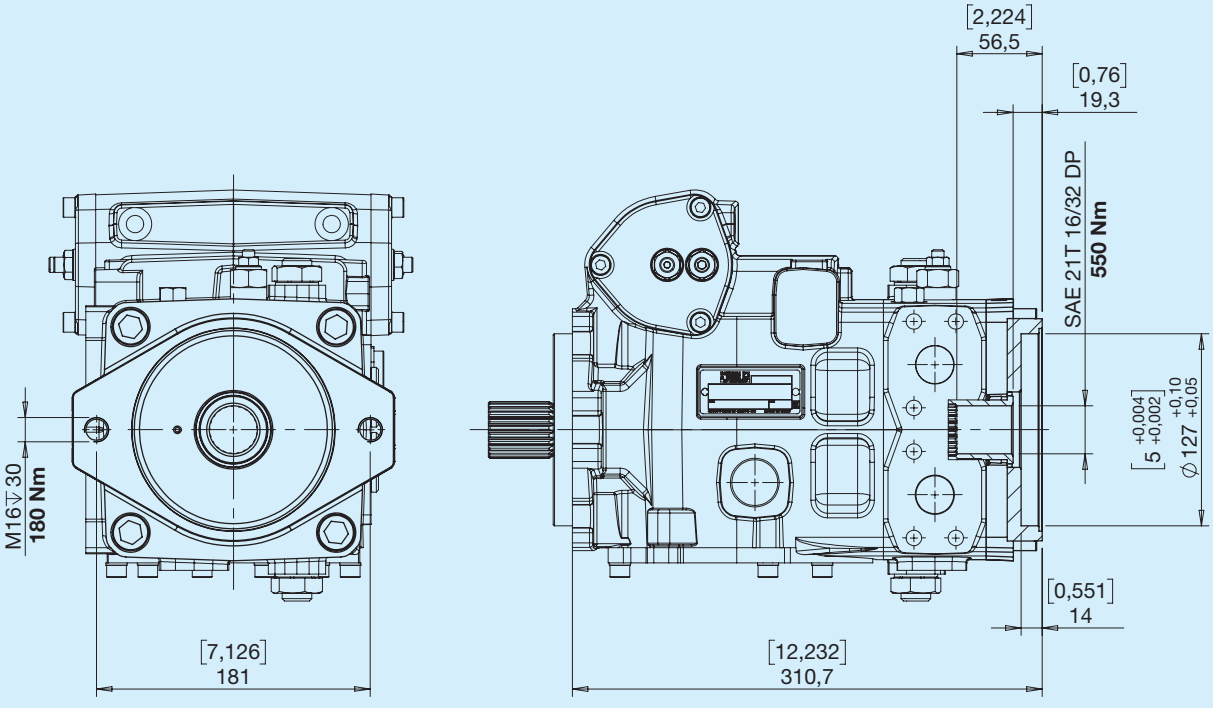

5 SAE A without boost pump

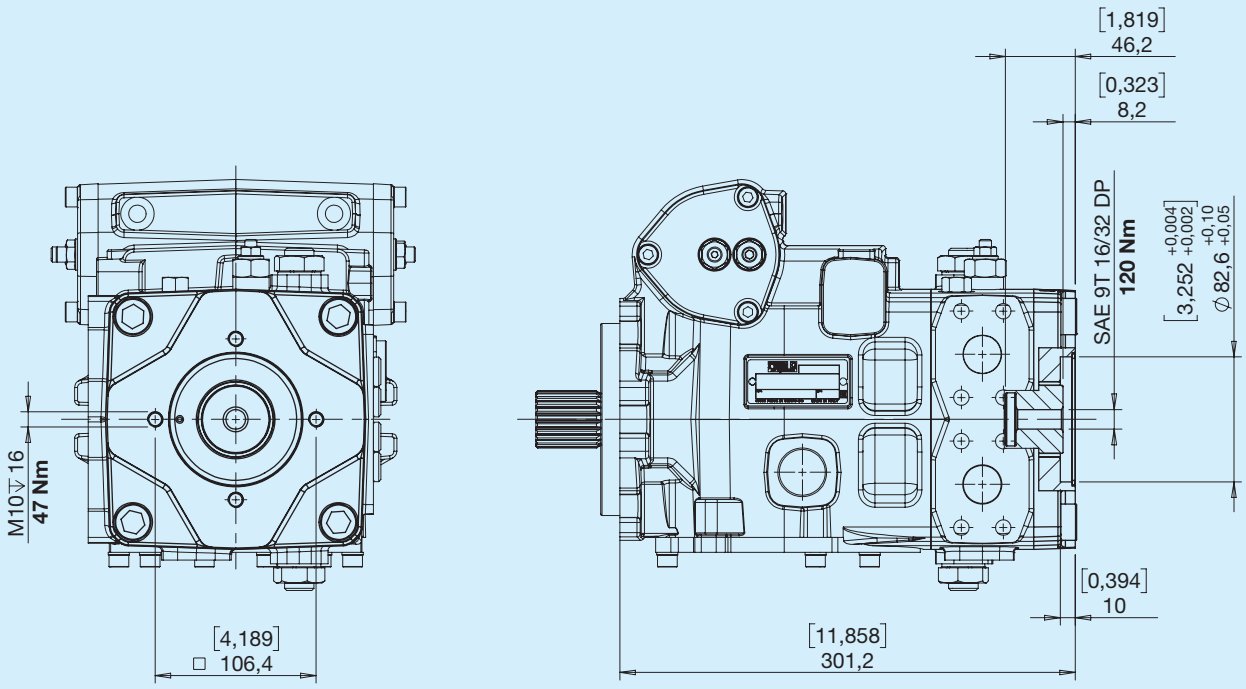

6 SAE B without boost pump

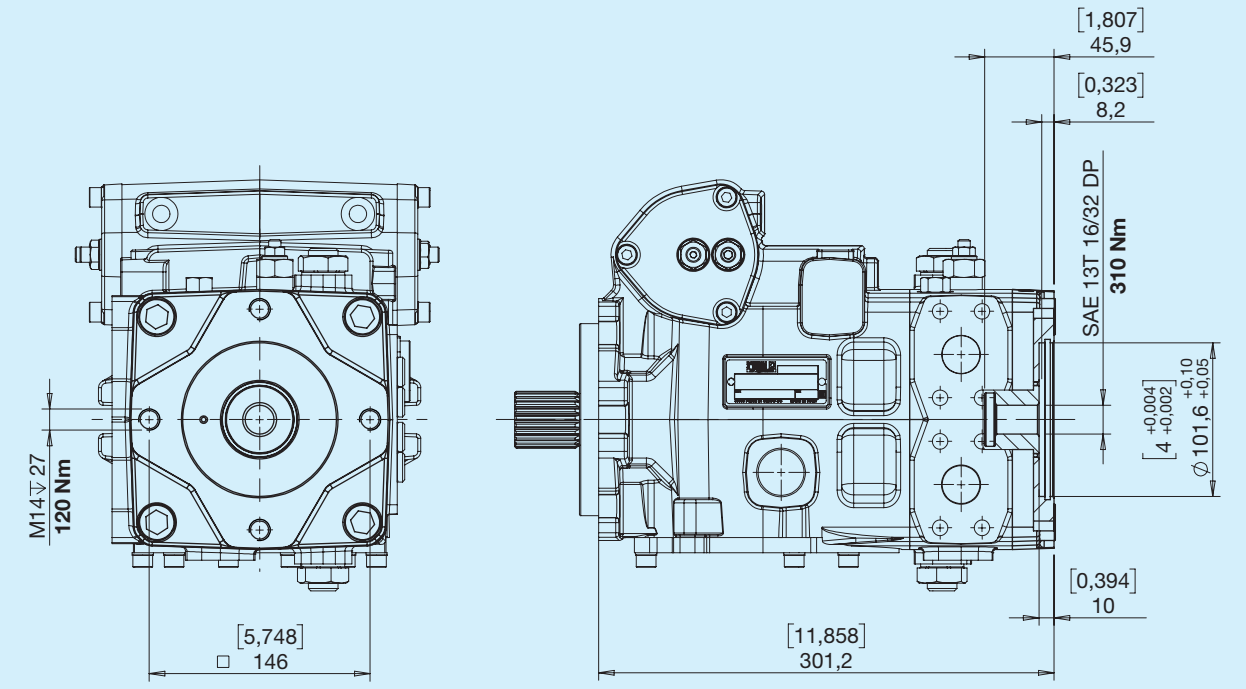

9 SAE B without boost pump

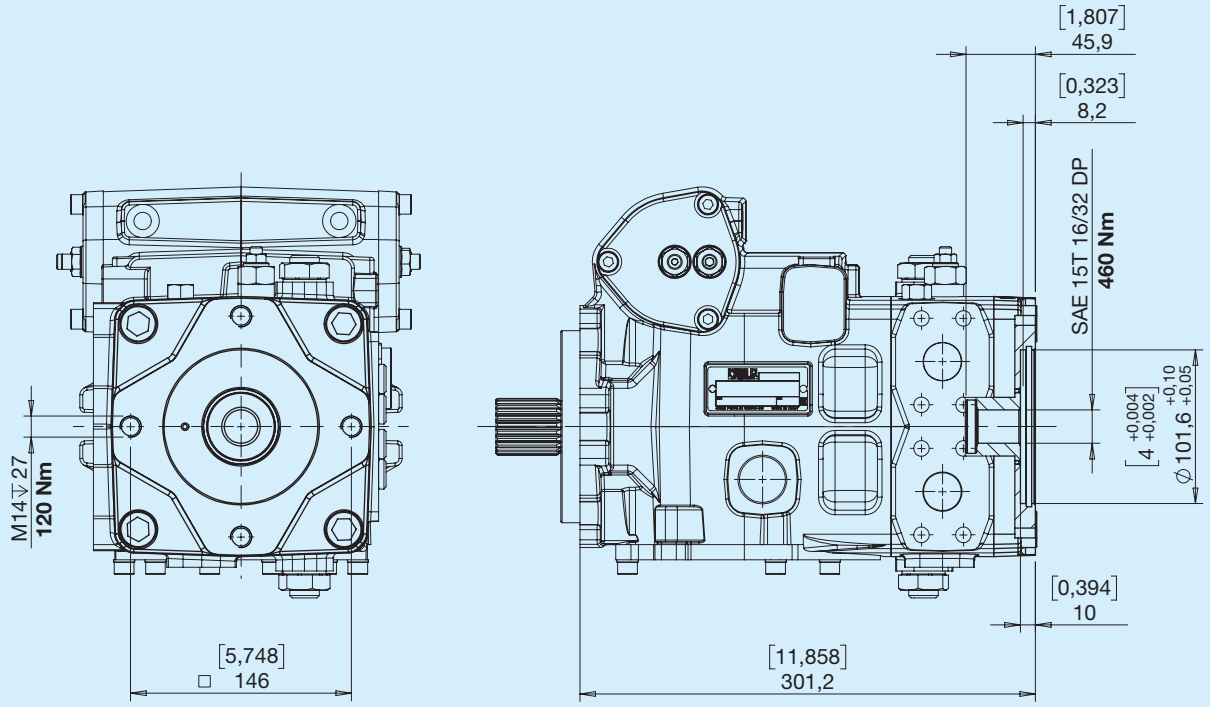

7 SAE C without boost pump

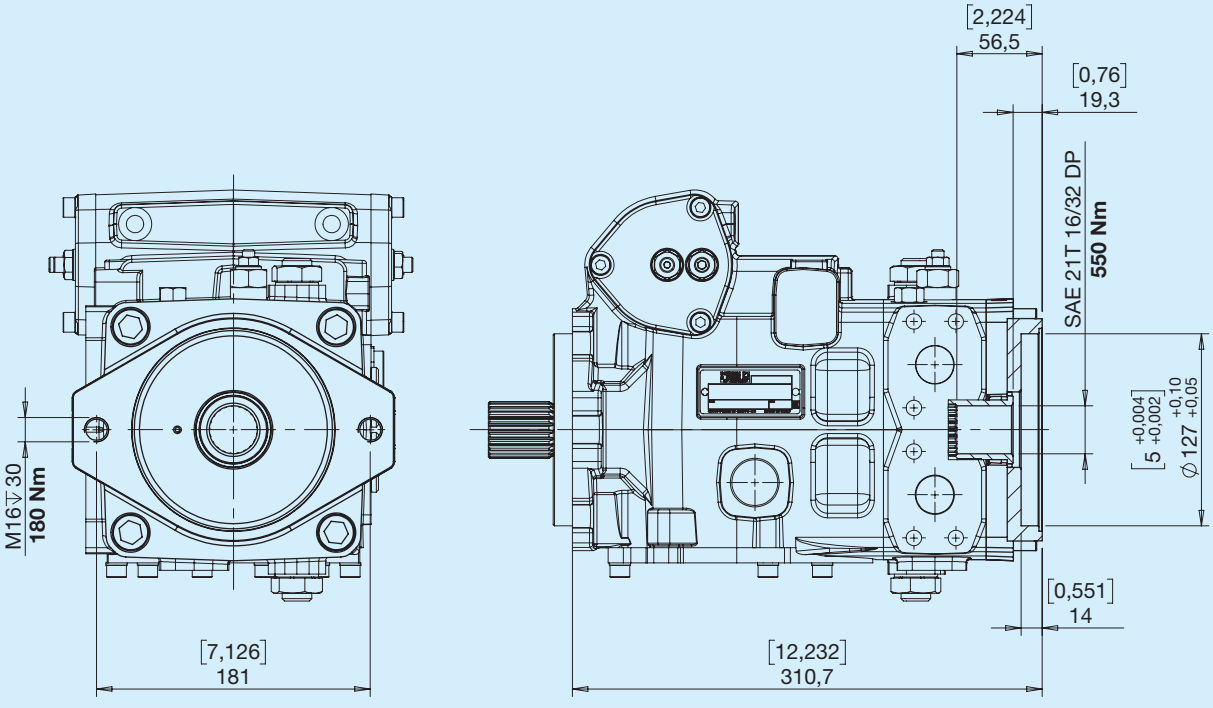

E 'no operator' safety

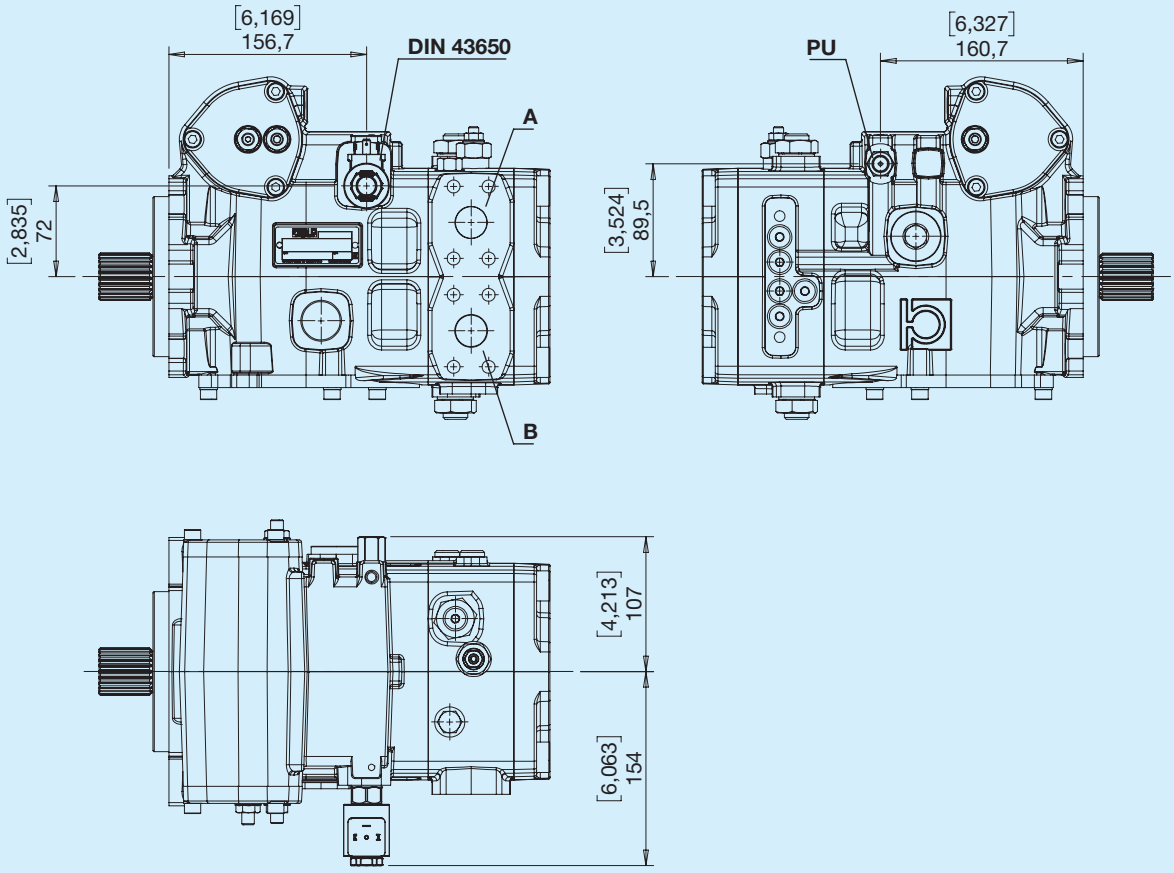

PU - Brake opening pressure G1/4

Hydraulic diagram

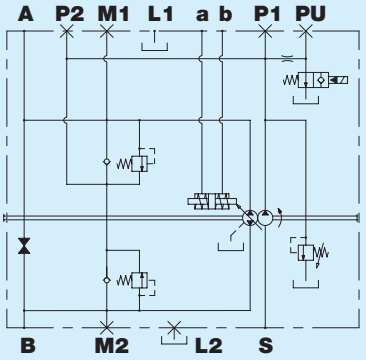

J Cut-off

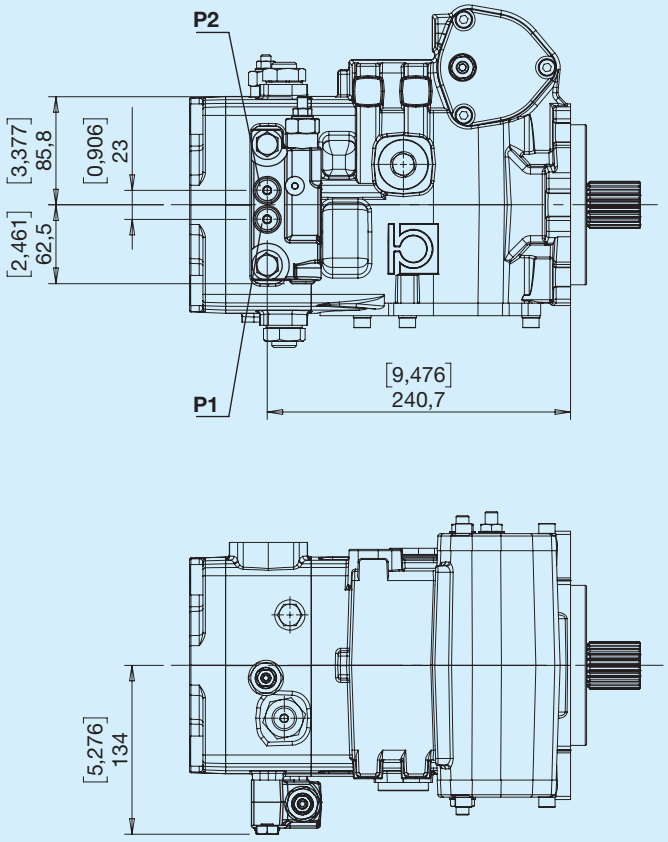

P1, P2 - Pressure intake G1/4

Hydraulic diagram

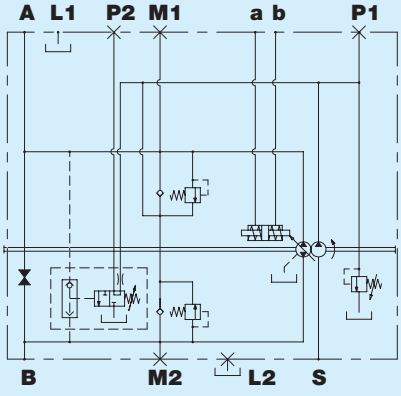

V Flushing valve (5-7 l/min)

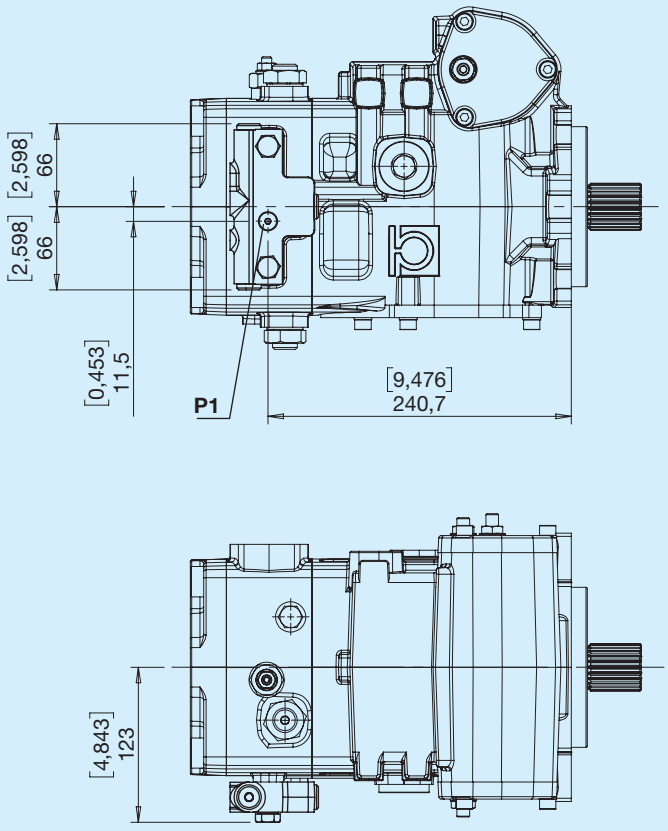

P1 - Pressure intake G1/8

Hydraulic diagram

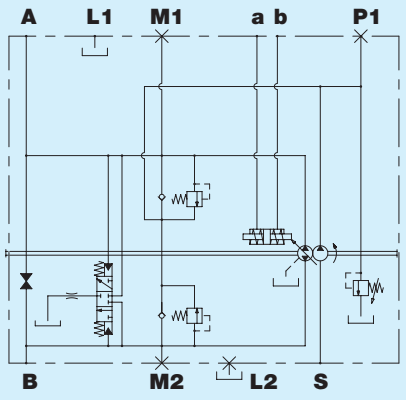

W Power limiter

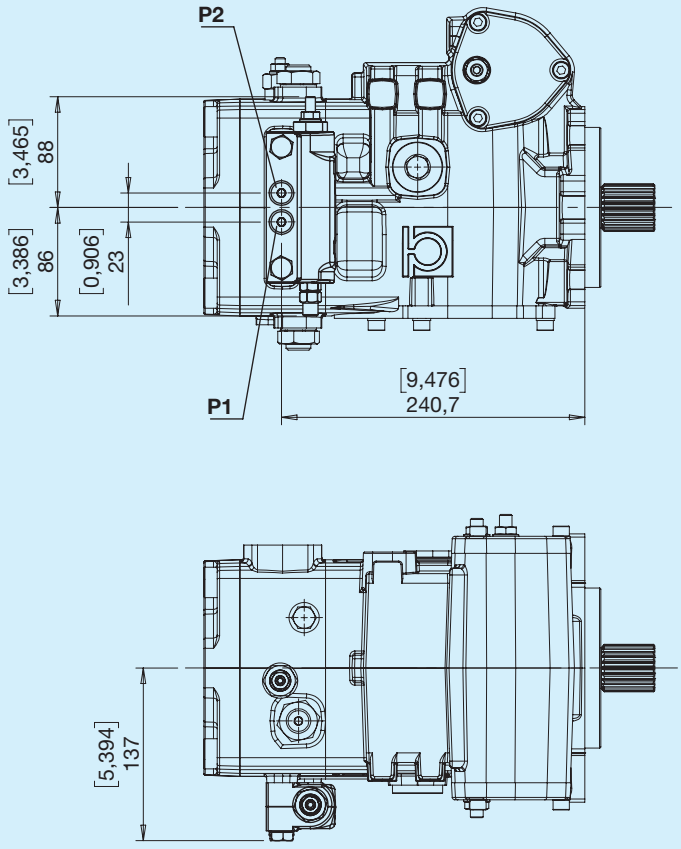

P1, P2 - Pressure intake G1/4

Hydraulic diagram

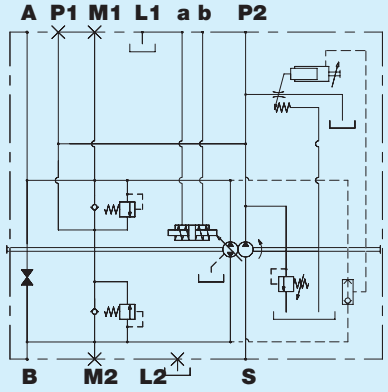

X Filter with clogging indicator

Electric differential indicator - 30 VDC - 0.2 A max

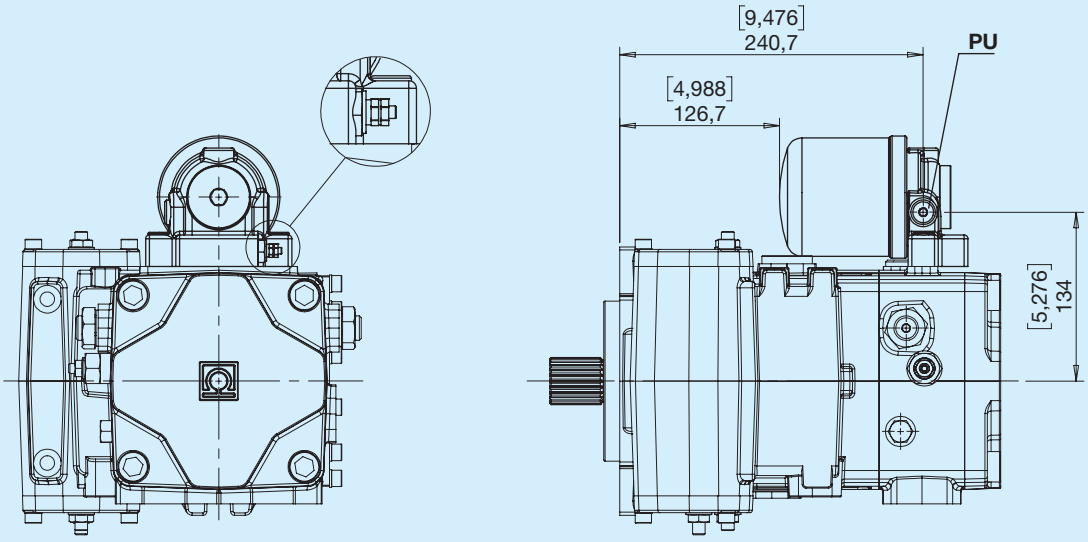

PU - Filtered oil intake G1/4

Hydraulic diagram

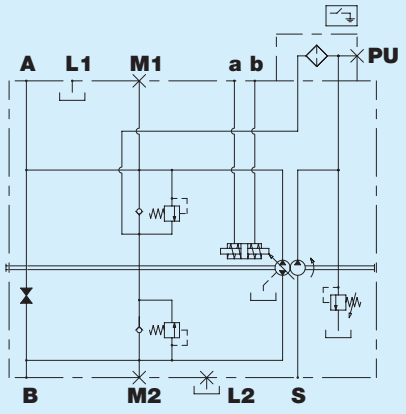

Y Filter without clogging indicator

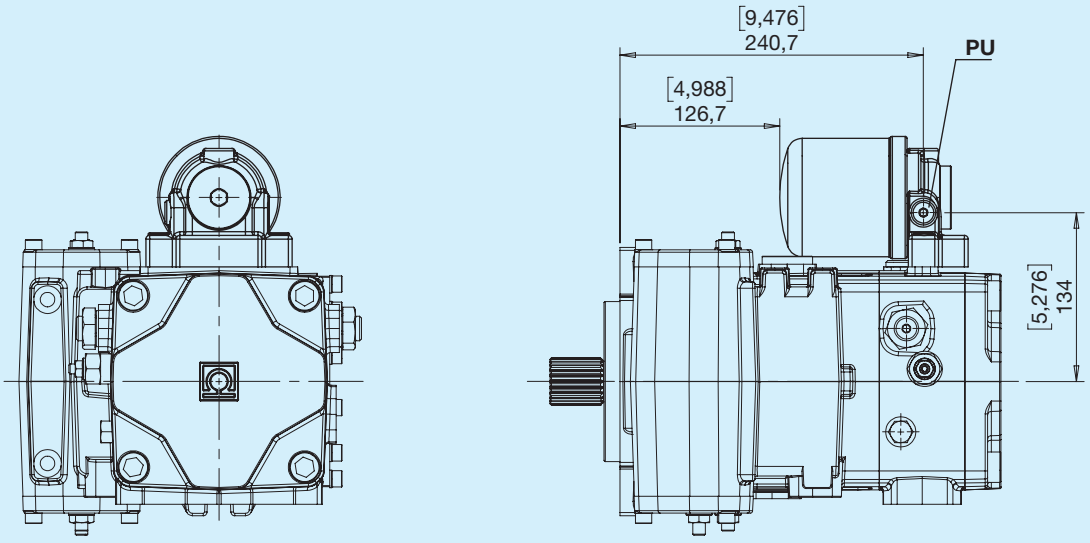

PU - Filtered oil intake G1/4

Hydraulic diagram

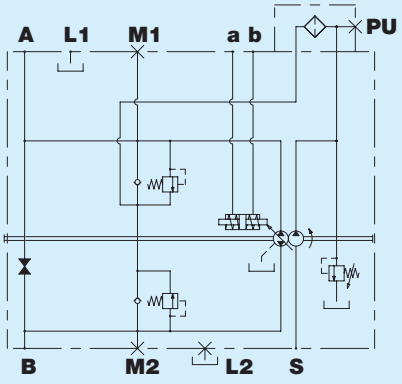

Instructions for ordering

HPP8 | 1 2 3 | 4 | 5 | 6 | 7 | 8 | 9 | 10 | 11 | 12 13 14

1 2 3 — Displacement

082	**100**	**125**

4 — Direction of rotation

R	Right	**L**	Left

5 — Flanges

E	SAE C (2+4 holes)

6 — Shafts

3	SAE 14T 12/24 DP	**8**	SAE 23T 16/32 DP	**0**	For HPP8 secondary pump
7	SAE 21T 16/32 DP	**9**	SAE 13T 8/16 DP		

7 — Type of ports

G	Gas	**U**	Unf

8 — Controls

N	Electrical ON/OFF, open centre 12V	**I**	Lever-operated hydraulic	**V**	Electronic proportional feedback control 24V
Q	Electrical ON/OFF, open centre 24V	**K**	Remote hydraulic	**S**	Electronic proportional control 12V
G	Feedback hydraulic	**O**	Electronic proportional feedback control 12V	**W**	Electronic proportional control 24V

9 — Valve calibration

I	280 bar	**O**	350 bar	**P**	400 bar	**R**	450 bar
L	300 bar	**U**	380 bar	**Q**	420 bar		

10 — Versions

0	No special fittings, without boost pump	**3**	SAE B with boost pump	**6**	SAE B without boost pump	**9**	SAE BB (Z15) without charge pump
1	No special fittings, with boost pump	**4**	SAE C with boost pump	**7**	SAE C without boost pump	**T**	For pump HPP8 without boost pump
2	SAE A with boost pump	**5**	SAE A without boost pump	**8**	SAE BB (Z15) with charge pump	**V**	For pump HPP8 with boost pump

11 — Accessories

0	No option	**J**	Cut-off	**V**	Flushing valve	**X**	Filter with electric clogging indicator
E	'no operator' safety	**S**	Multiple accessories (special version)	**W**	Power limiter	**Y**	Filter without electric clogging indicator

12 13 14 — Special versions

...

Double pump with two charge pumps

The order code of a multiple pump is obtained by summing, as shown in the example, the codes of the individual pumps (stages) obtained by following the order instructions for the single pumps

Stage 1 **HPP8 125 R E 8 G K R V 0 000** + Stage 2 **HPP8 100 R E 0 G K R 1 0 000**

tandem pump

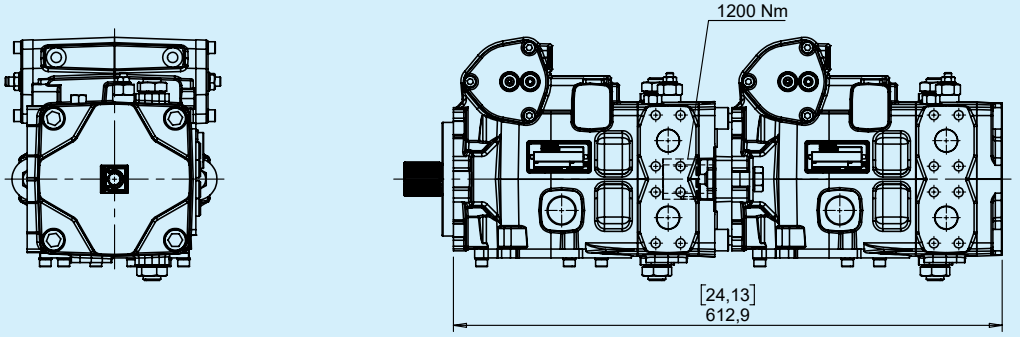

Stage 1 **HPP8 125 R E 8 G K R V 0 000** + Stage 2 **HPP8 100 R E 0 G K R 2 0 000**

tandem pump with SAE A fitting

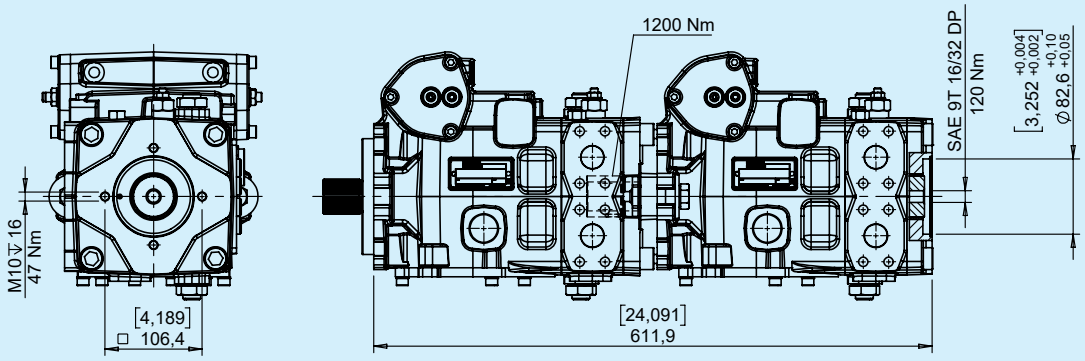

Stage 1 **HPP8 125 R E 8 G K R V 0 000** + Stage 2 **HPP8 100 R E 0 G K R 3 0 000**

tandem pump with SAE B fitting

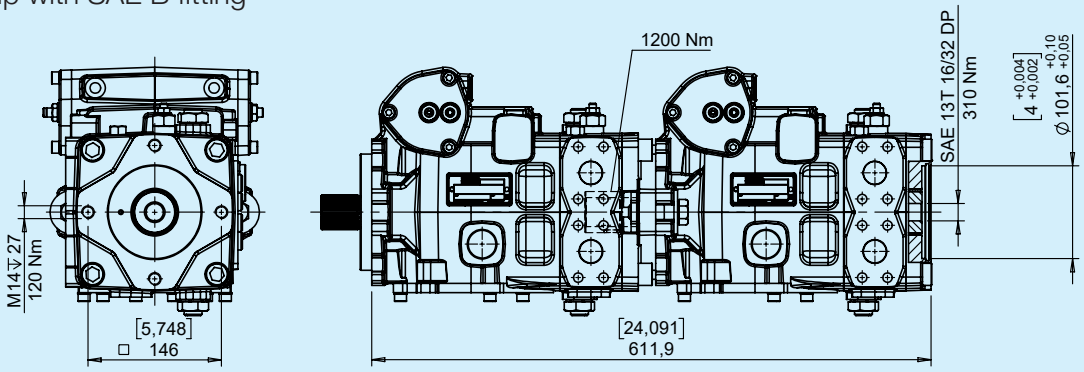

Stage 1 **HPP8 125 R E 8 G K R V 0 000** + Stage 2 **HPP8 100 R E 0 G K R 8 0 000**

tandem pump with SAE BB fitting

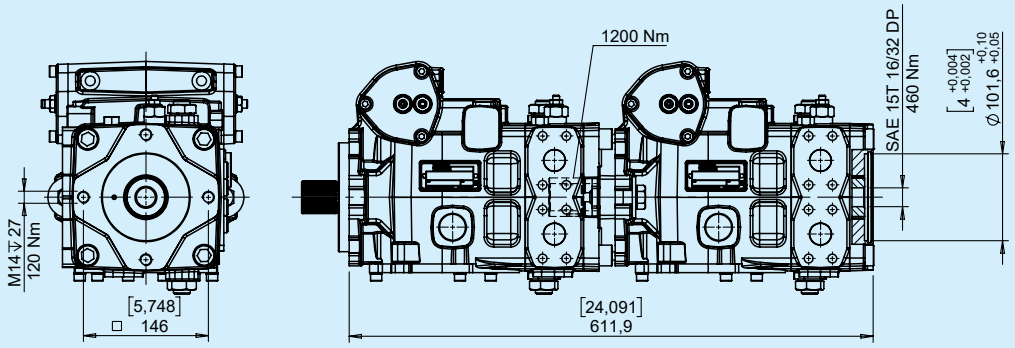

Stage 1 **HPP8 125 R E 8 G K R V 0 000** + Stage 2 **HPP8 100 R E 0 G K R 4 0 000**

tandem pump with SAE C fitting

