Closed circuit axial piston pumps and motors HMPZB

Variable-displacement pumps HMPZB 11-19

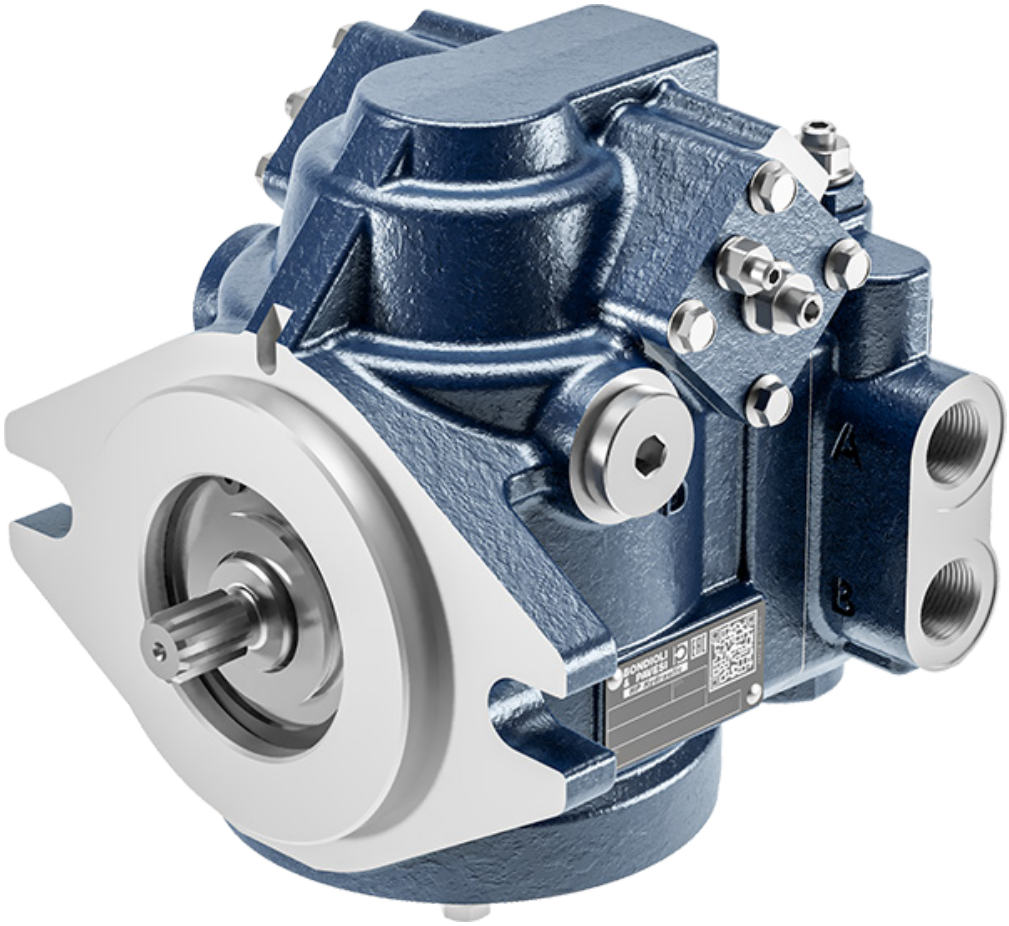

Before use, carefully read the GENERAL INSTRUCTIONS FOR USE OF CLOSED CIRCUIT AXIAL PISTON PUMPS AND MOTORS.

Dimensions and technical data

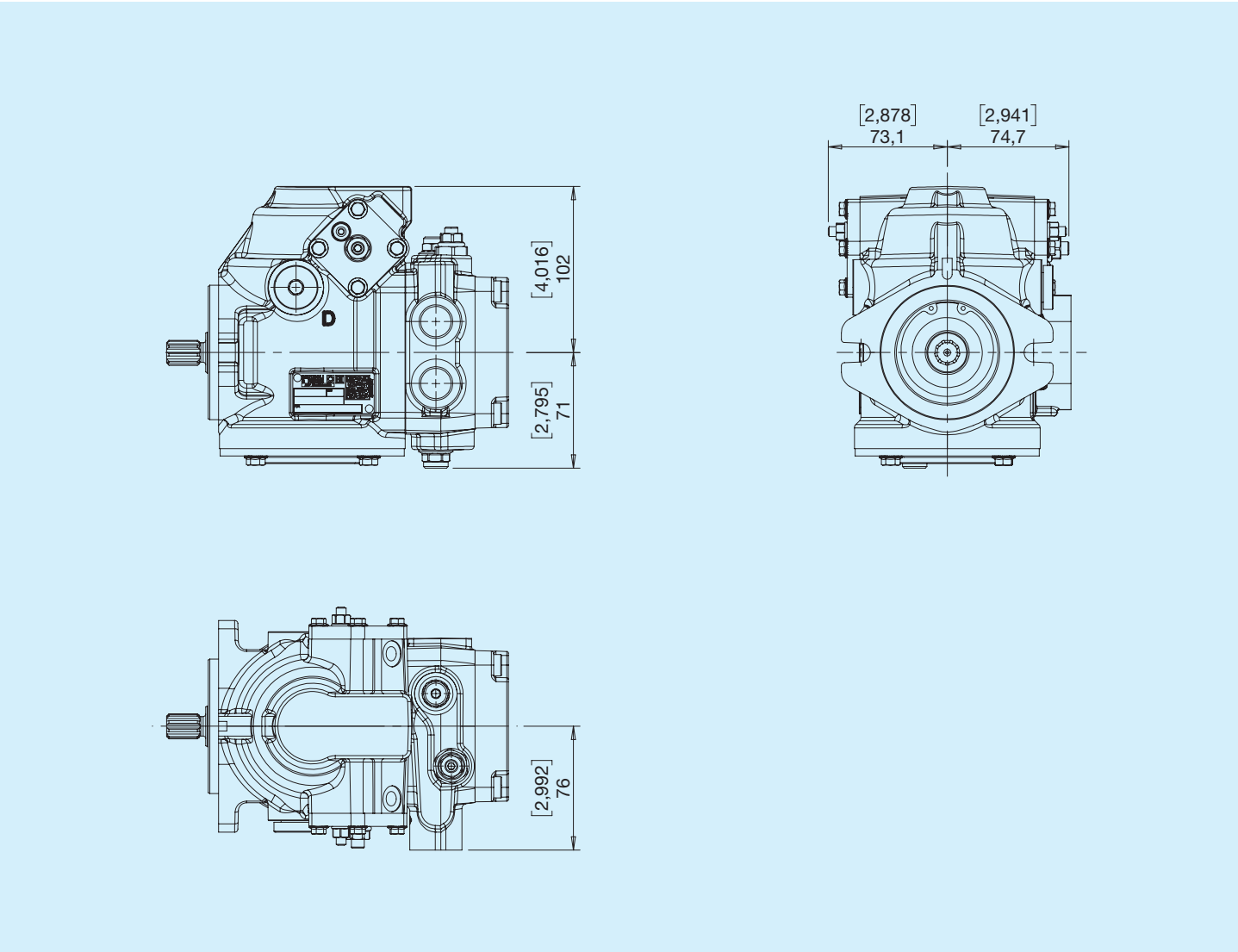

HMPZB	Theoretical displacement		Continuous Pressure		Intermittent pressure		Peak pressure		Rotational speed		Weight	
	cm³	**in³**	**bar**	**psi**	**bar**	**psi**	**bar**	**psi**	**MAX min⁻¹**	**MIN min⁻¹**	**kg**	**lbs**
11	11	0.67	280	4060	300	4350	320	4640	3600	500	13.5	29.8
12	12	0.73	280	4060	300	4350	320	4640	3600	500	13.5	29.8
13	13	0.80	280	4060	300	4350	320	4640	3600	500	13.5	29.8
14	14	0.85	280	4060	300	4350	320	4640	3600	500	13.5	29.8
16	16	0.98	280	4060	300	4350	320	4640	3600	500	13.5	29.8
18	18	1.10	280	4060	300	4350	320	4640	3600	500	13.5	29.8
19	19	1.16	280	4060	300	4350	320	4640	3600	500	13.5	29.8

Feed pump

Type	Feed pump displacement		Pressure	
	cm^3	**in^3**	**bar**	**psi**
Single pump	5	0.30	20	290
Tandem pump (one boost pump)	8	0.48	20	290
Tandem pump (two boost pumps)	5+5	0.30+0.30	20	290

Polar moment of inertia

approx.. 42x10-4 Nm2

A SAE A

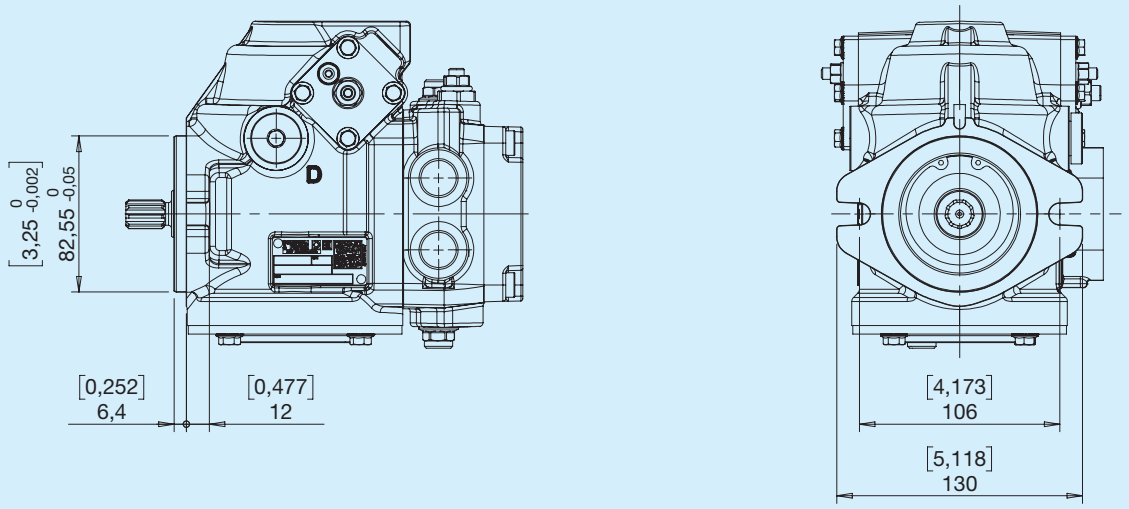
[3,25 0 -0,002]
82,55 0 -0,05
D
[0,252]
6,4
[0,477]
12
[4,173]
106
[5,118]
130

B SAE B

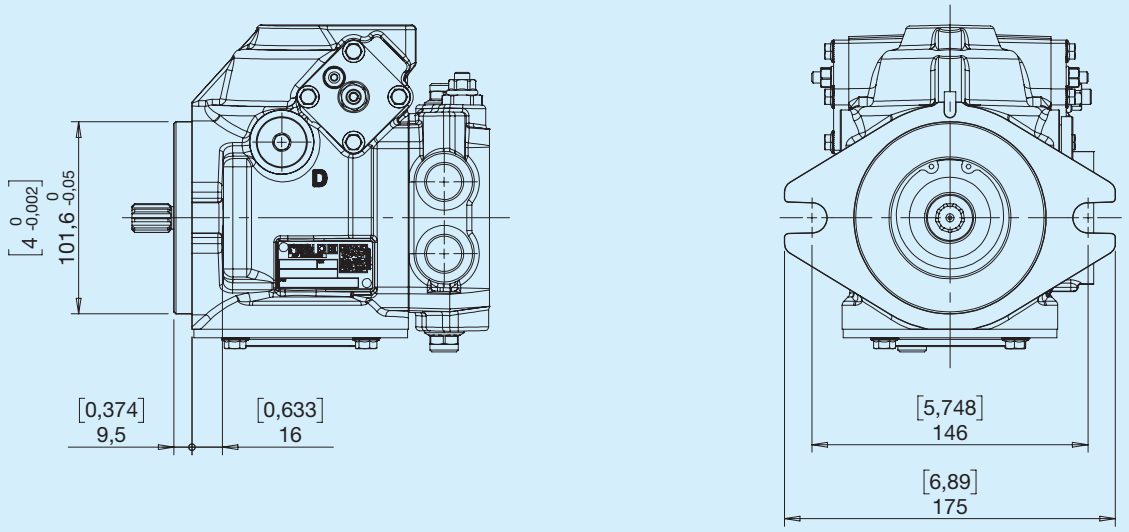
[4 0 -0,002]
101,6 0 -0,05
D
[0,374]
9,5
[0,633]
16
[5,748]
146
[6,89]
175

Shaft profile

J Cylindrical Ø22.22

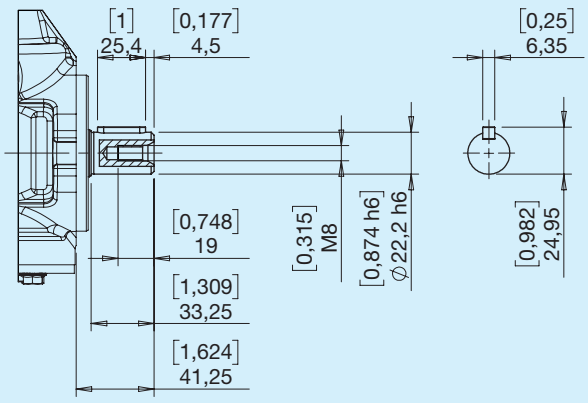

Max. torque 220 Nm

V SAE 9T 16/32 DP

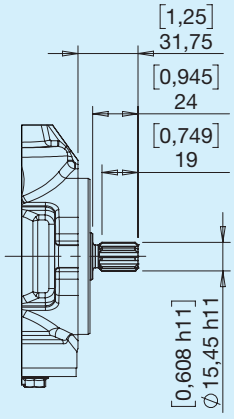

Max. torque 120 Nm

X SAE 11T 16/32 DP

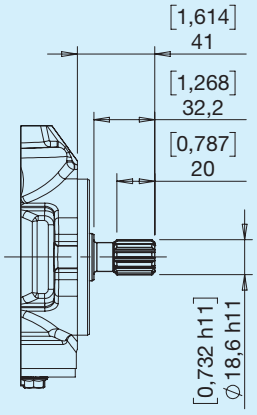

Max. torque 170 Nm

9 SAE 13T 16/32 DP

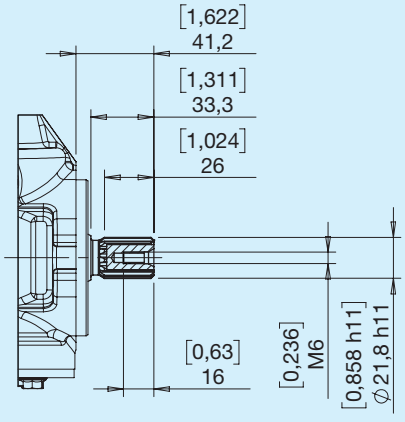

Max. torque 220 Nm

Position of ports

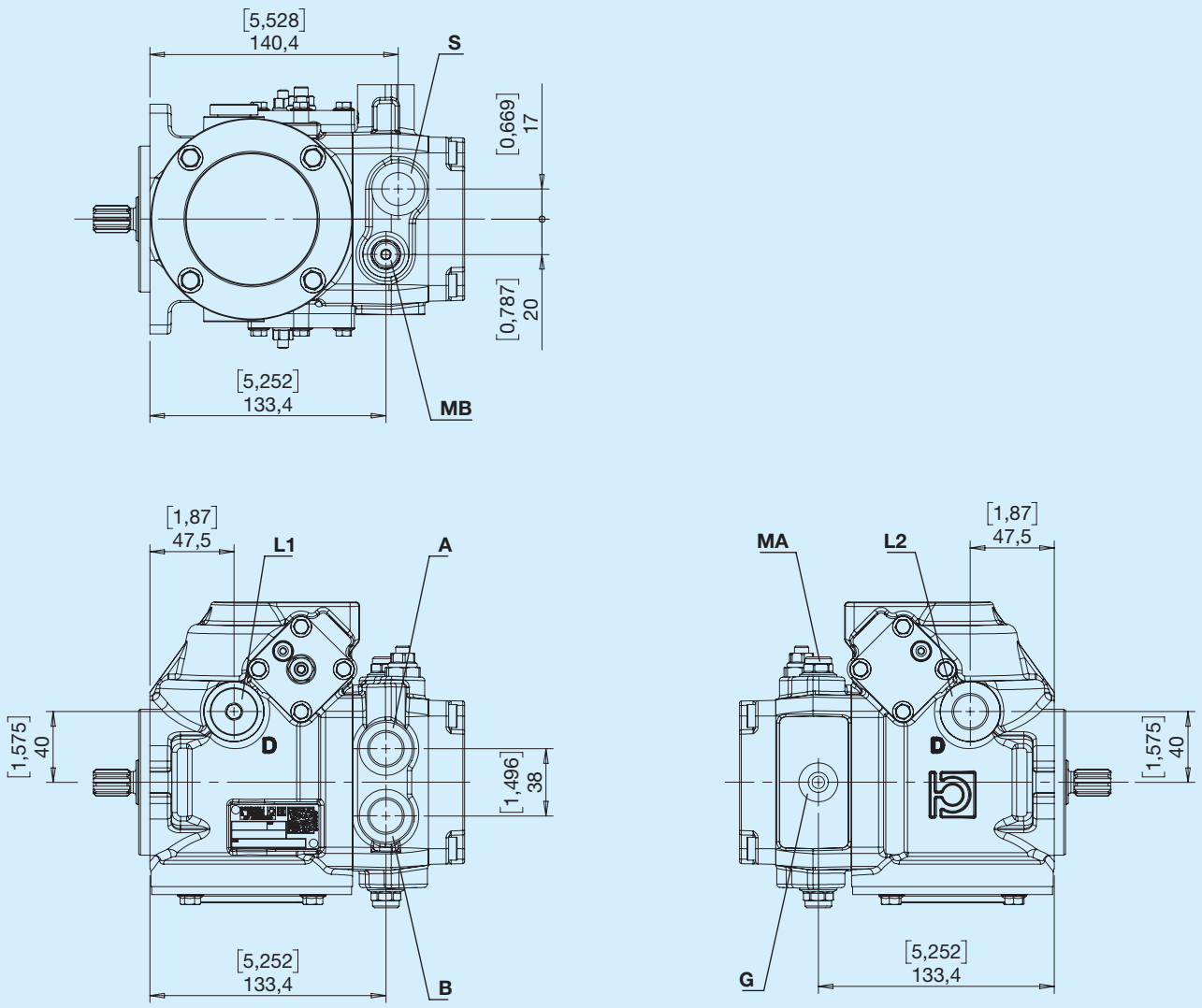

A,B - Use
L1, L2 - Drain port
S - Inlet
P - Pressure intake
M1, M2 - Manometer intake

Ports

Type G

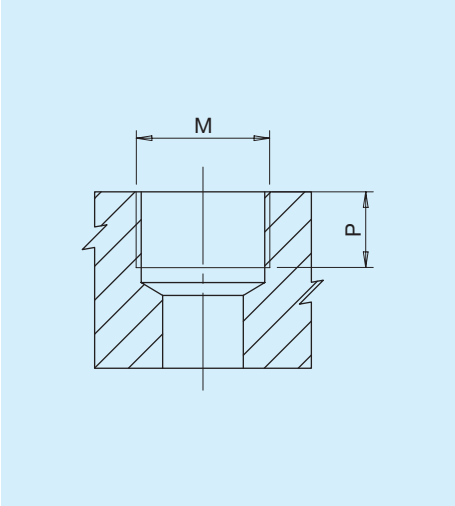

Type	M		P	
		Nm	**mm**	**in**
G1	Port ISO 1179-1 - G 1/8	8	8	0.31
G2	Port ISO 1179-1 - G 1/4	17	9	0.35
G4	Port ISO 1179-1 - G 1/2	70	14.5	0.57

Type U

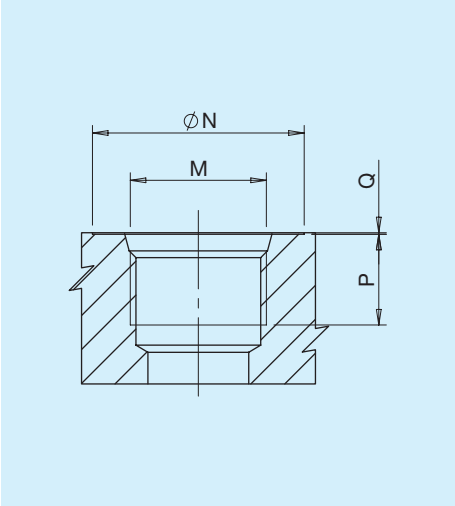

Type	Dim.	N		P		Q		M	
		mm	**in**	**mm**	**in**	**mm**	**in**		**Nm**
U2	1/4’	20	0.79	12	0.47	0.3	0.01	Port ISO 11926-1-7/16-20	17
U5	5/8’	34	1.34	18	0.71	0.3	0.01	Port ISO 11926-1-3/4-16	70

Combinations

Type	Inlet **S**	Outlet **A-B**	Drain port **L1-L2**	Pilot pressure **a-b**	Low pressure intake **G**	High pressure intake **MA - MB**
G	G4	G4	G4	G2	G2	G2
U	U5	U5	U5	G2	G2	U2

E Electrical ON/OFF, closed centre 12V

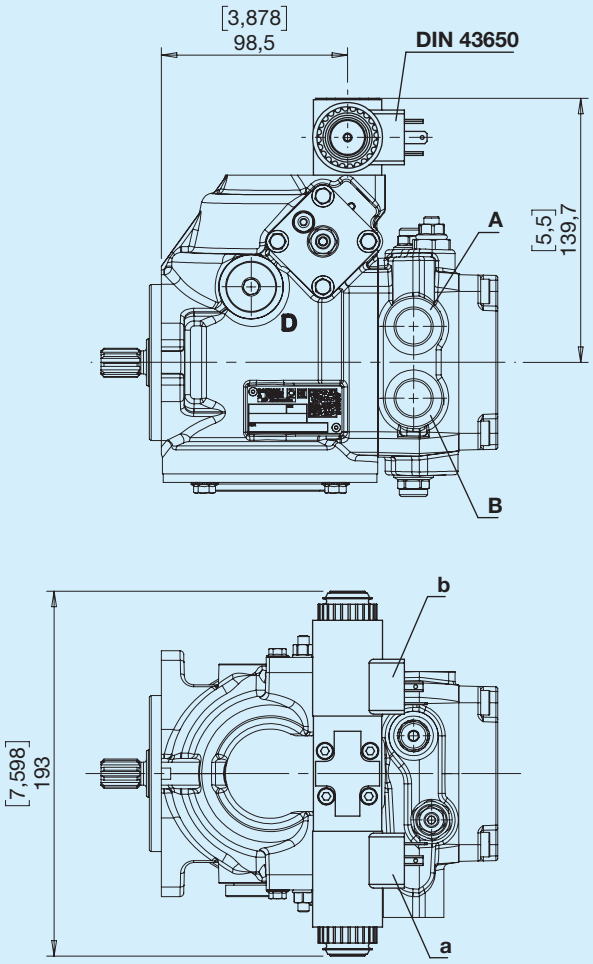

Outlet

Rotation	Excited solenoid	Outlet
Right	a	A
Right	b	B
Left	a	B
Left	b	A

Hydraulic diagram

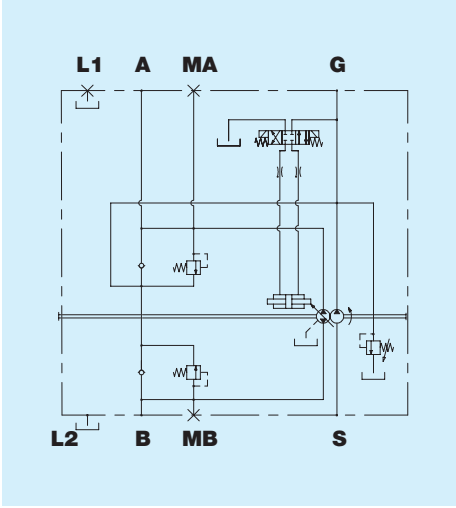

F Electrical ON/OFF, closed centre 24V

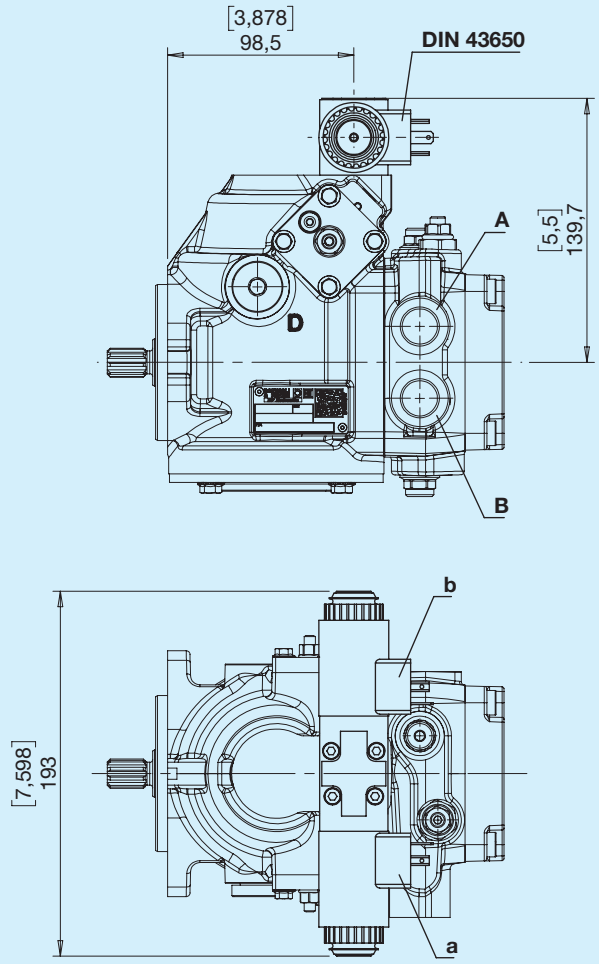

Outlet

Rotation	Excited solenoid	Outlet
Right	a	A
Right	b	B
Left	a	B
Left	b	A

Hydraulic diagram

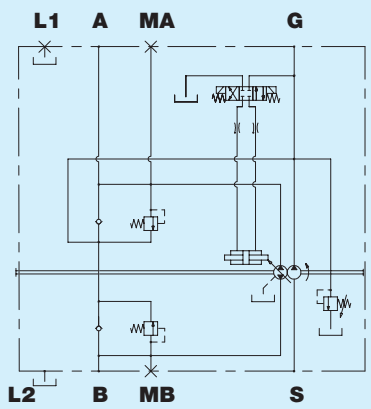

N Electrical ON/OFF, open centre 12V

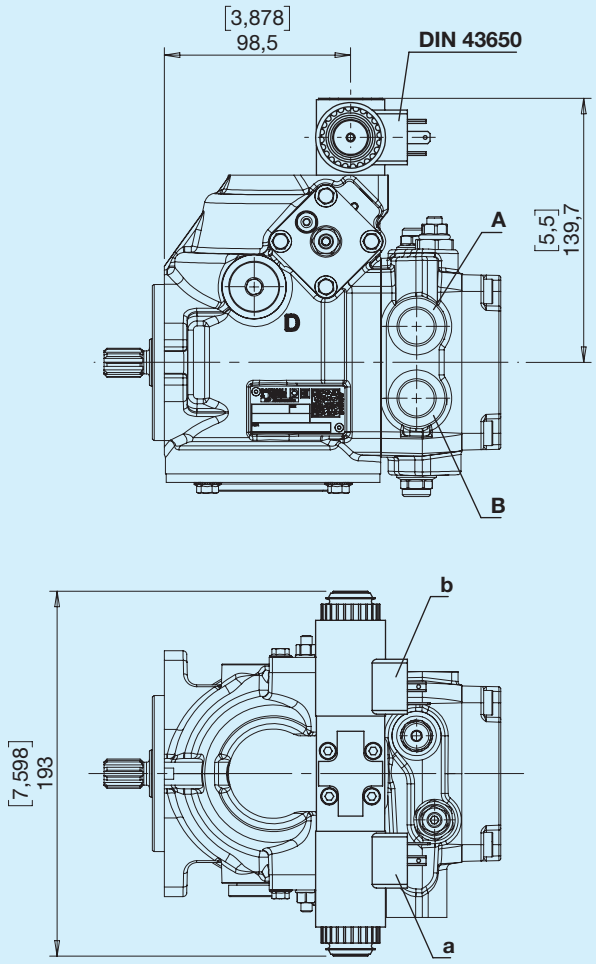

Outlet

Rotation	Excited solenoid	Outlet
Right	a	A
Right	b	B
Left	a	B
Left	b	A

Hydraulic diagram

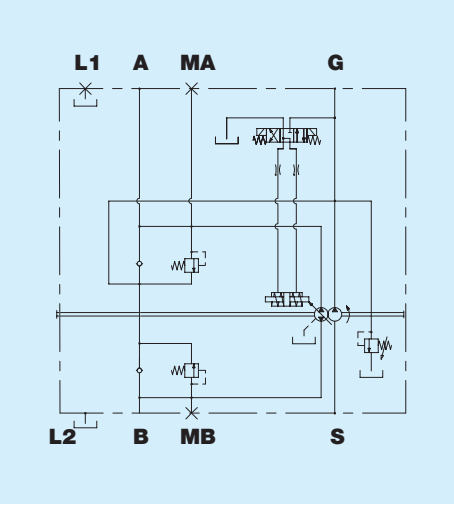

Q Electrical ON/OFF, open centre 24V

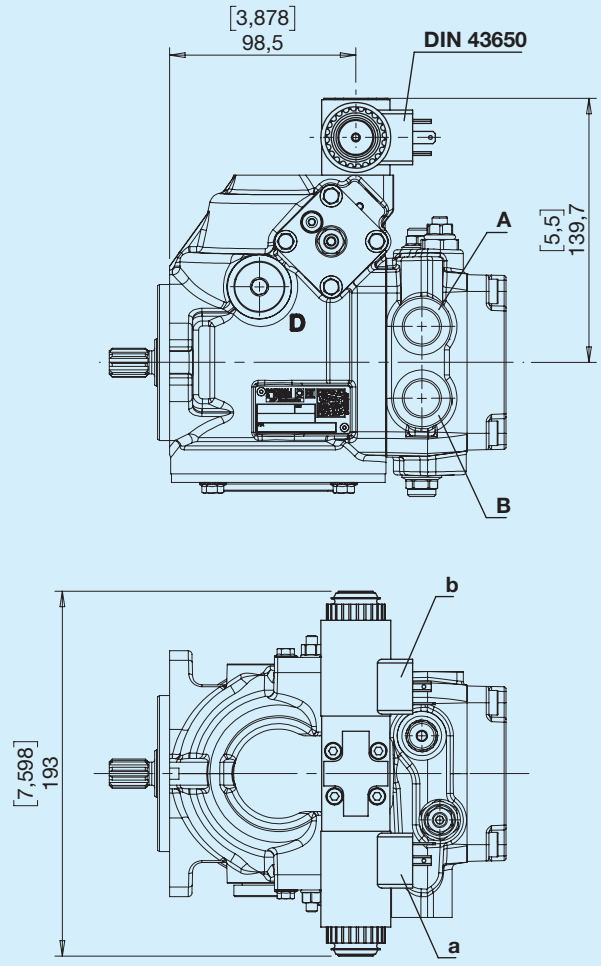

Outlet

Rotation	Excited solenoid	Outlet
Right	a	A
Right	b	B
Left	a	B
Left	b	A

Hydraulic diagram

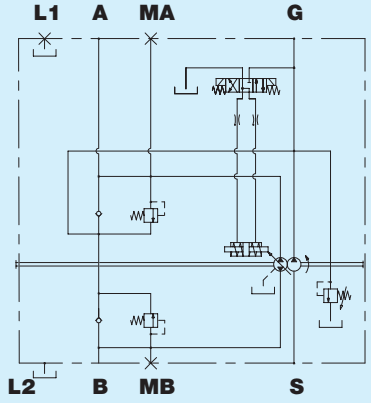

K Direct hydraulic

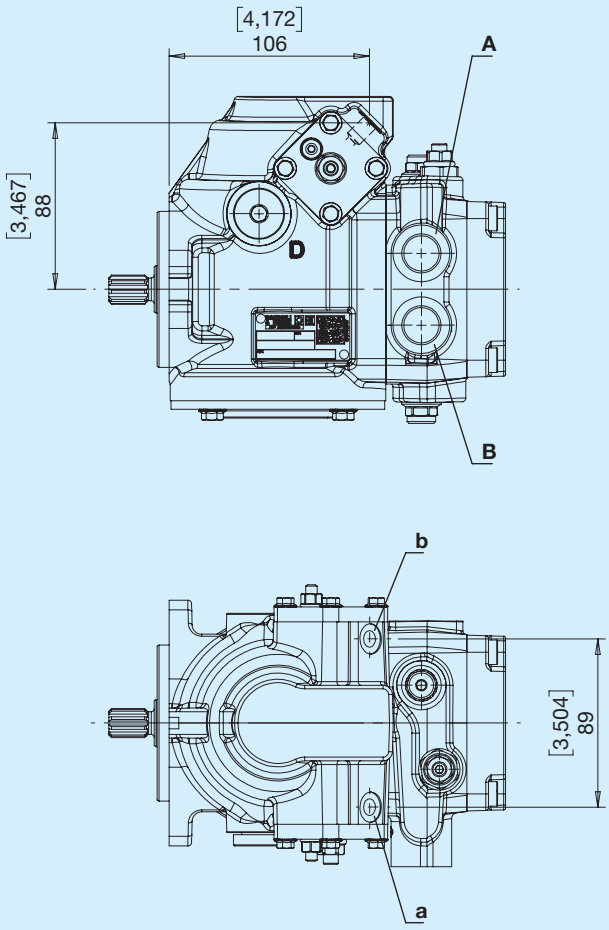

Outlet

Rotation	Pilot pressure	Outlet
Right	a	A
Right	b	B
Left	a	B
Left	b	A

Pilot pressure

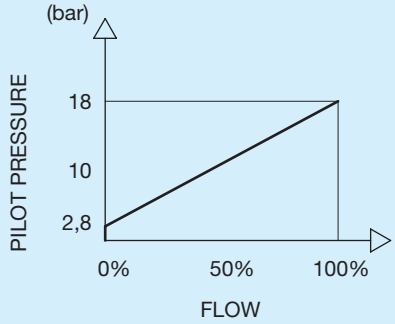

Hydraulic diagram

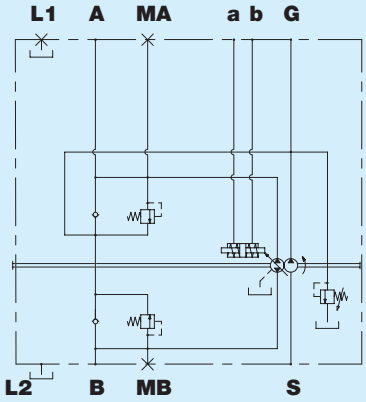

S Electronic proportional control 12V

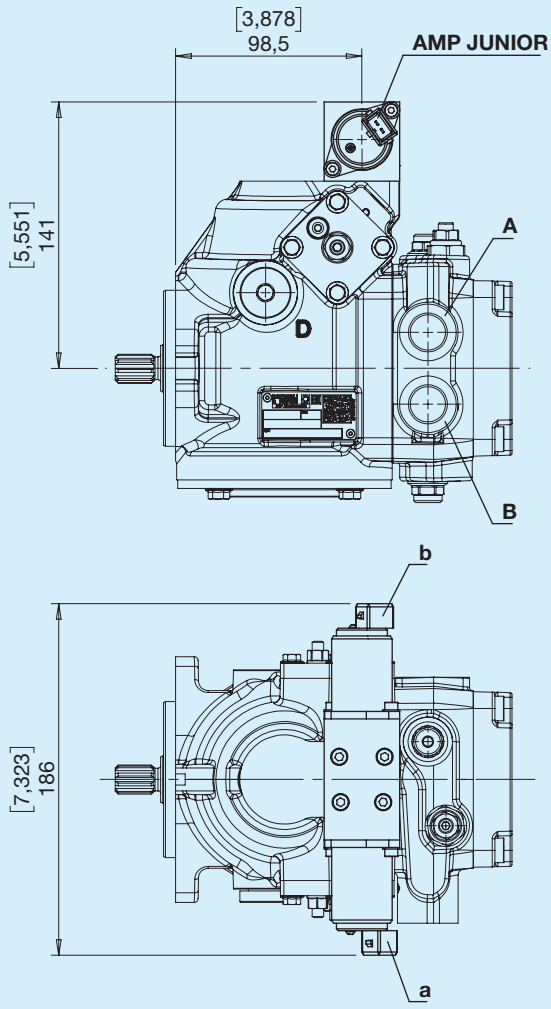

Available on request with DEUTSCH DT04-2P connectors

Outlet

Rotation	Excited solenoid	Outlet
Right	a	A
Right	b	B
Left	a	B
Left	b	A

Control

Rated voltage	12	V
Min. current (I1)	450	mA
Max. current (I2)	1100	mA
PWM frequency	100	Hz

Pilot pressure

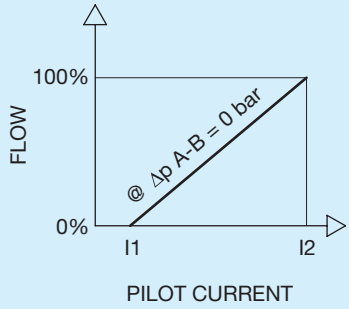

Hydraulic diagram

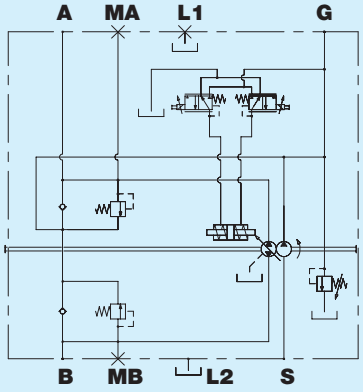

W Electronic proportional control 24V

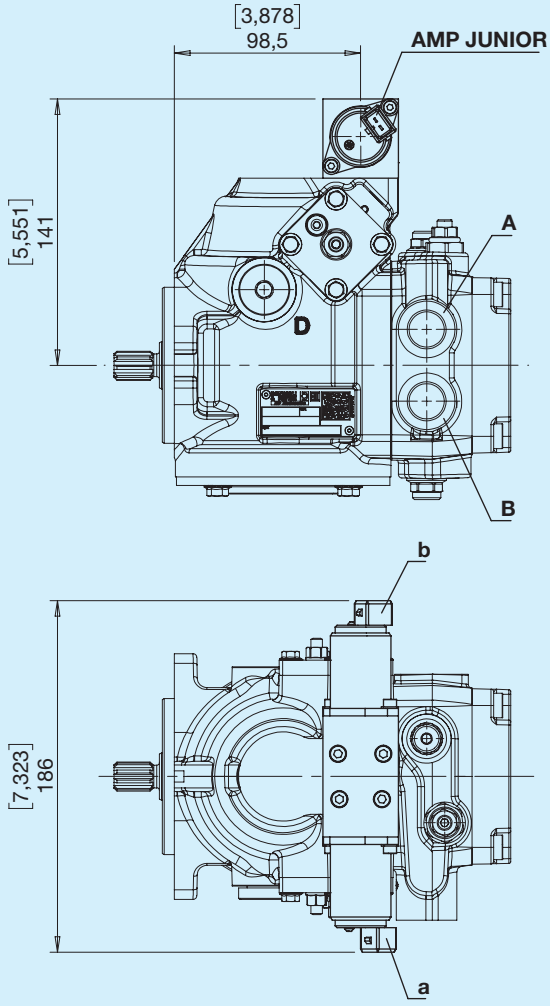

Available on request with DEUTSCH DT04-2P connectors

Outlet

Rotation	Excited solenoid	Outlet
Right	a	A
Right	b	B
Left	a	B
Left	b	A

Control

Rated voltage	24	V
Min. current (I1)	250	mA
Max. current (I2)	540	mA
PWM frequency	100	Hz

Pilot pressure

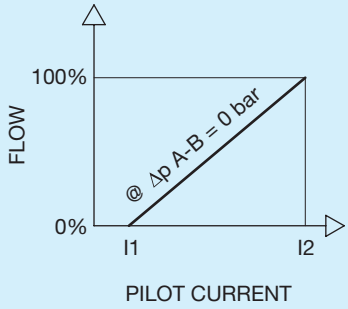

Hydraulic diagram

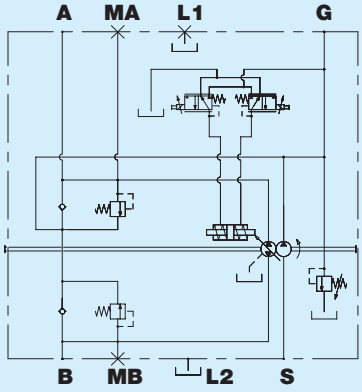

0 No special fittings, without feed

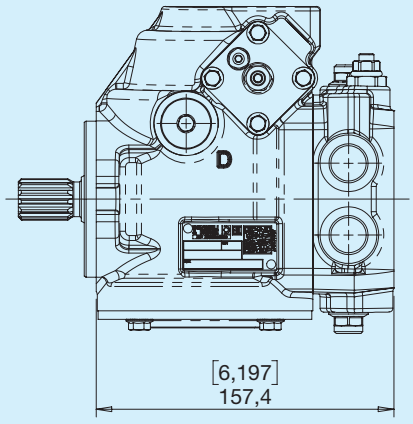

1 No special fittings, with feed pump

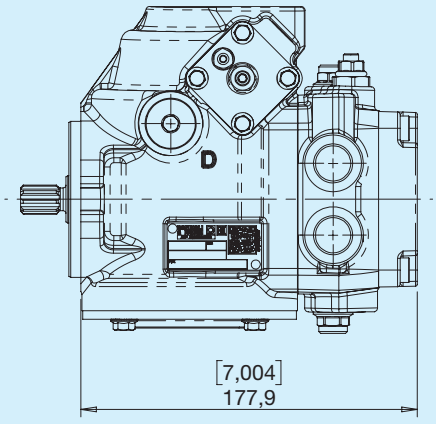

2 SAE A with feed pump

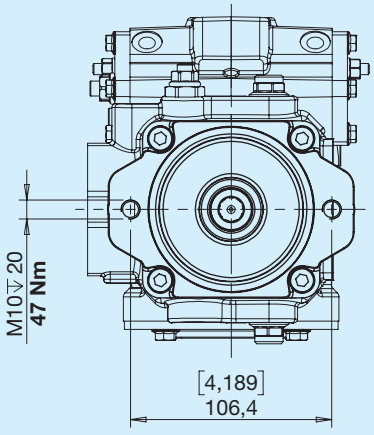

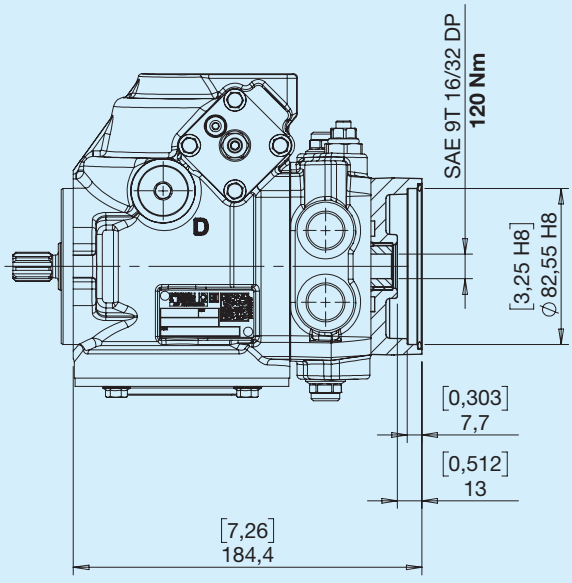

5 SAE A without feed pump

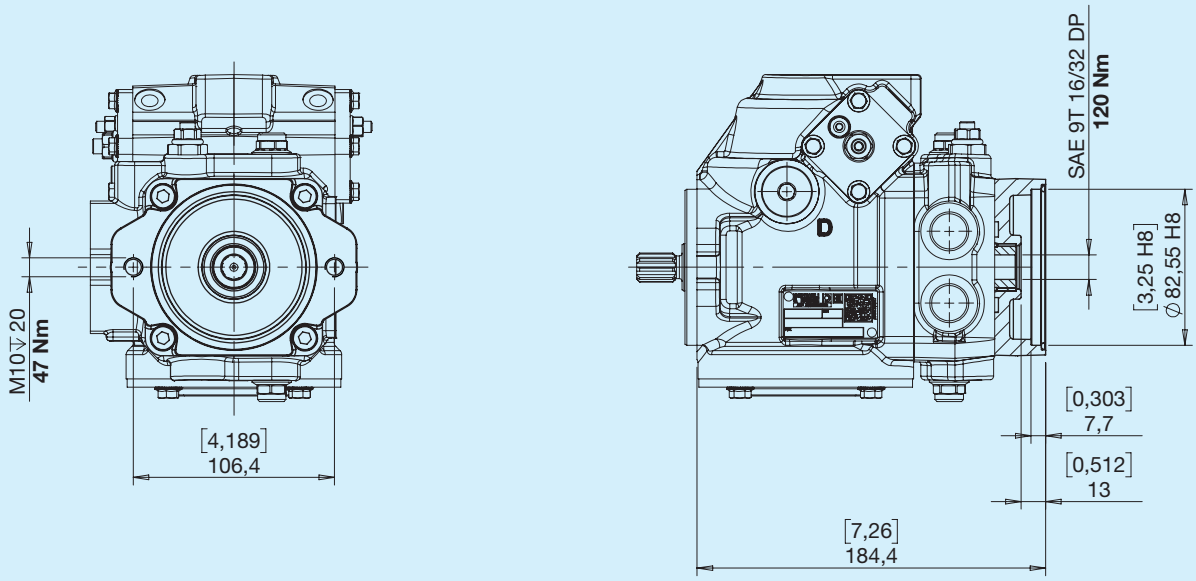

8 GR1 with feed pump

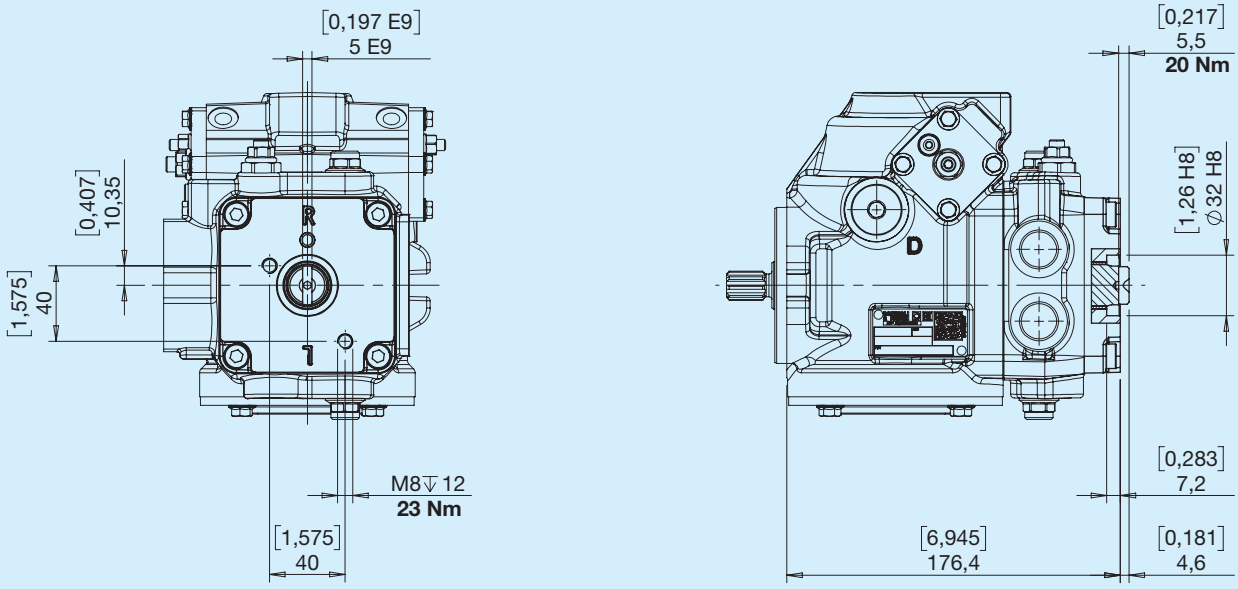

9 GR1 without feed pump

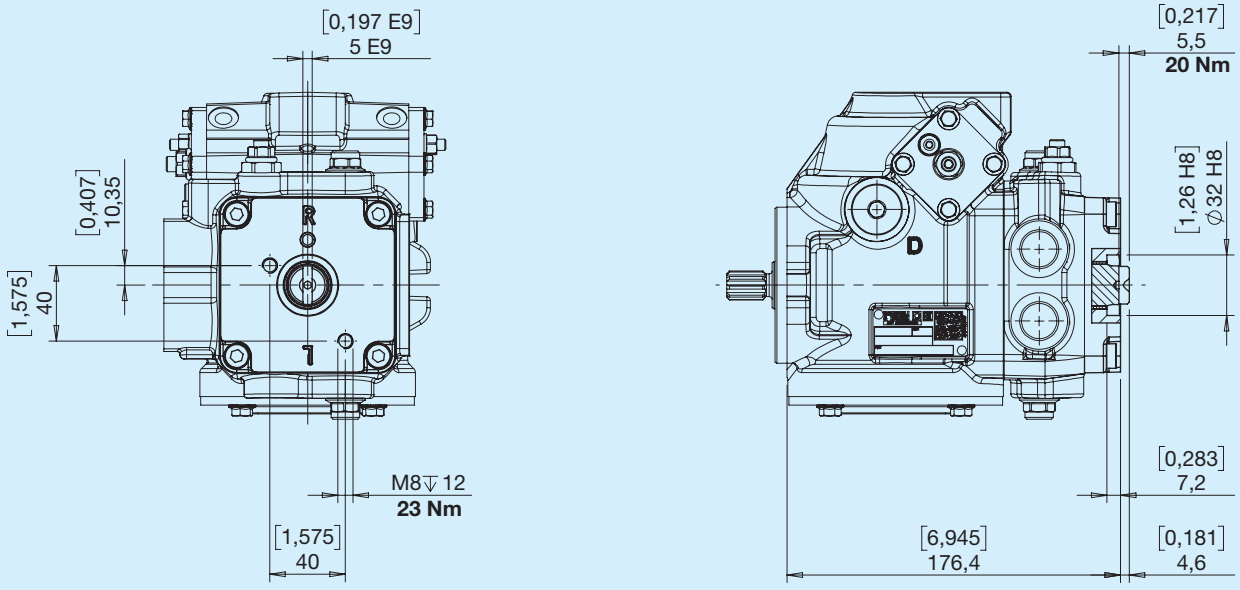

A Angle sensor

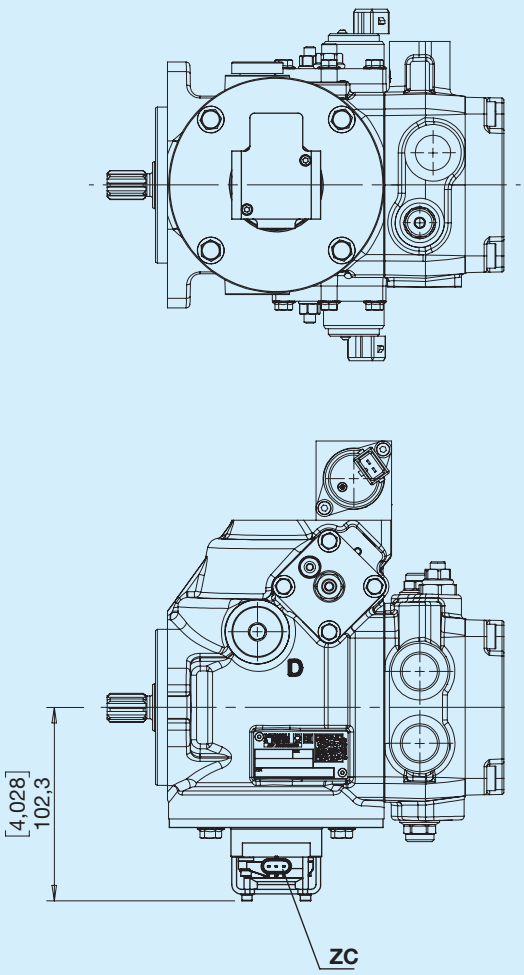

ZC=HIRSCHMANN 3 Way
872-858-541
pin 1 +5 Vdd
pin 2 Signal
pin 3 GND

Pilot pressure

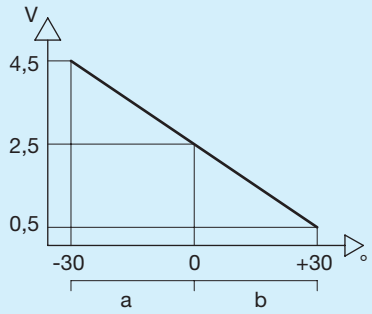

Hydraulic diagram

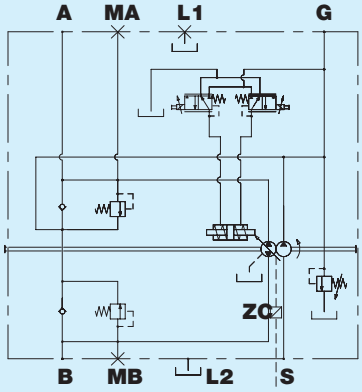

B By-pass

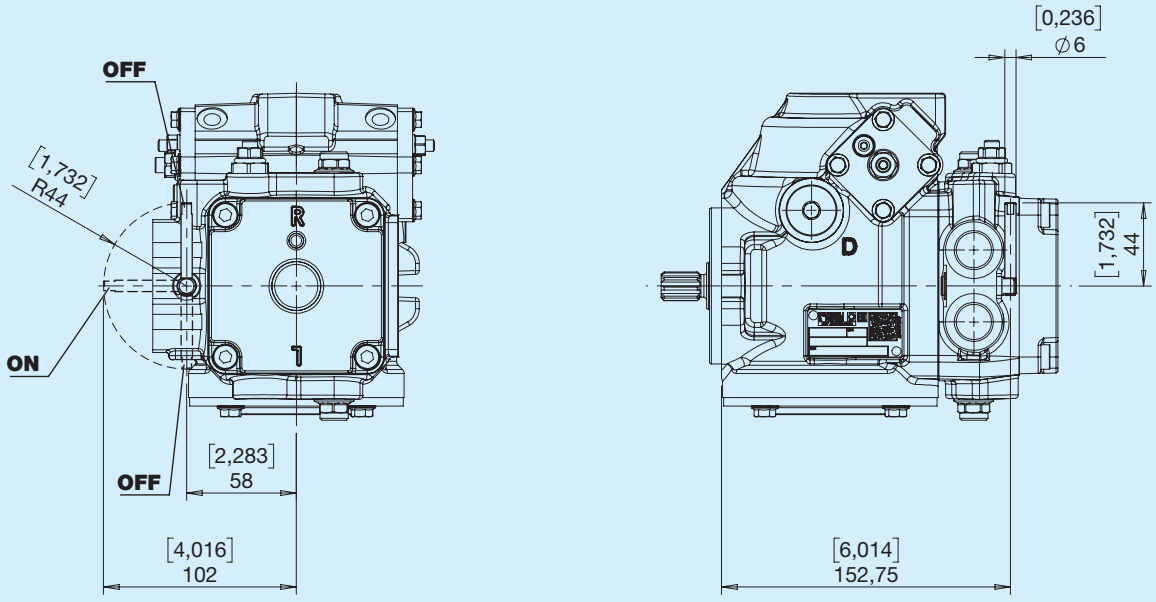

Hydraulic diagram

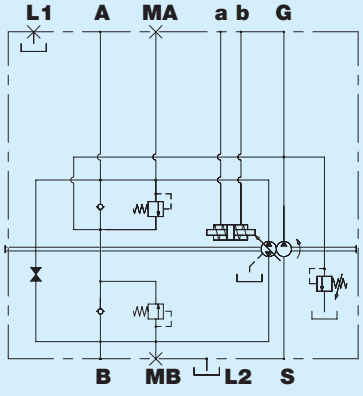

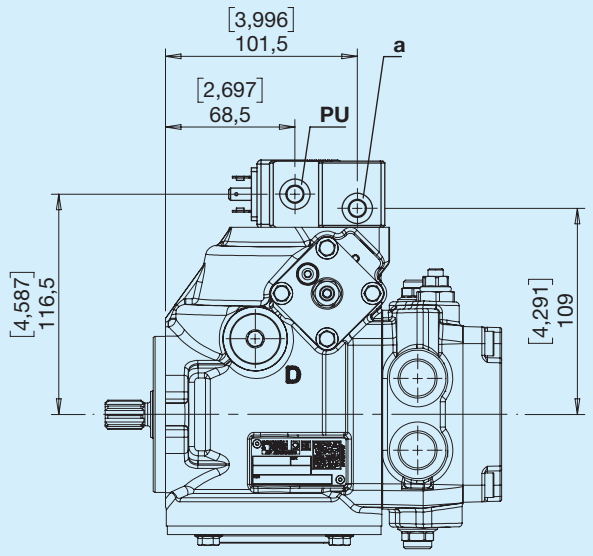

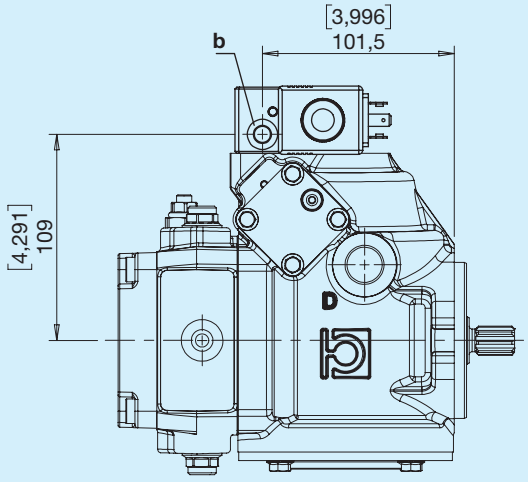

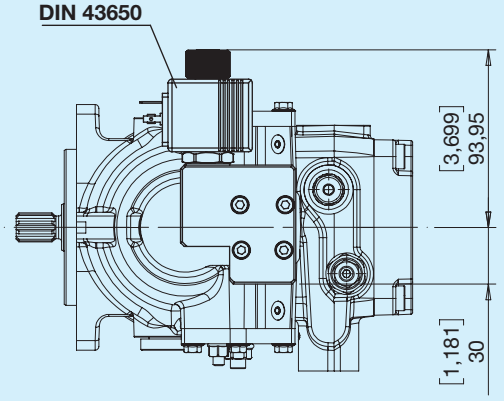

PU - Brake opening pressure G1 (GAS) or U2 (UNF)

Hydraulic diagram

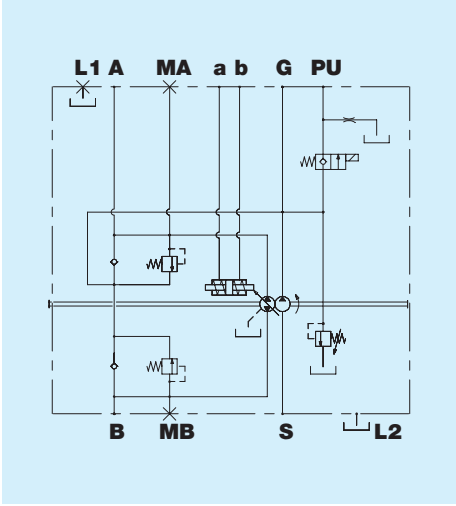

J Cut-off

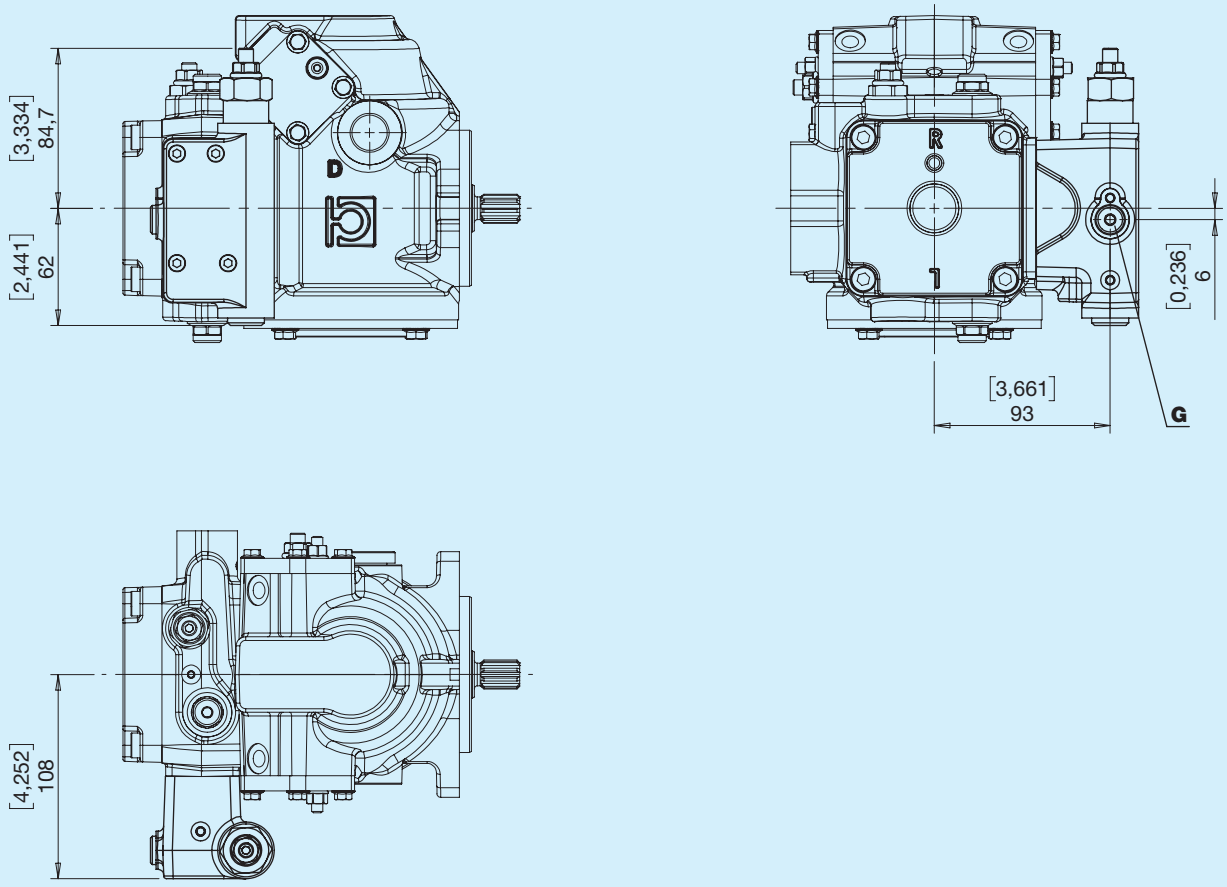

G - Low pressure intake G1

Hydraulic diagram

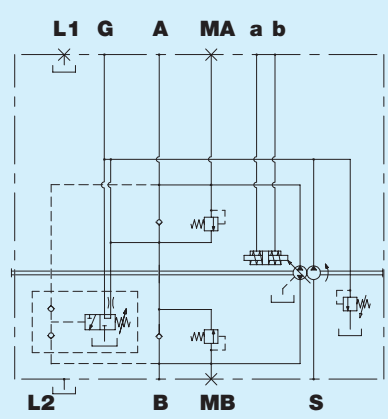

M Adjustable flushing valve

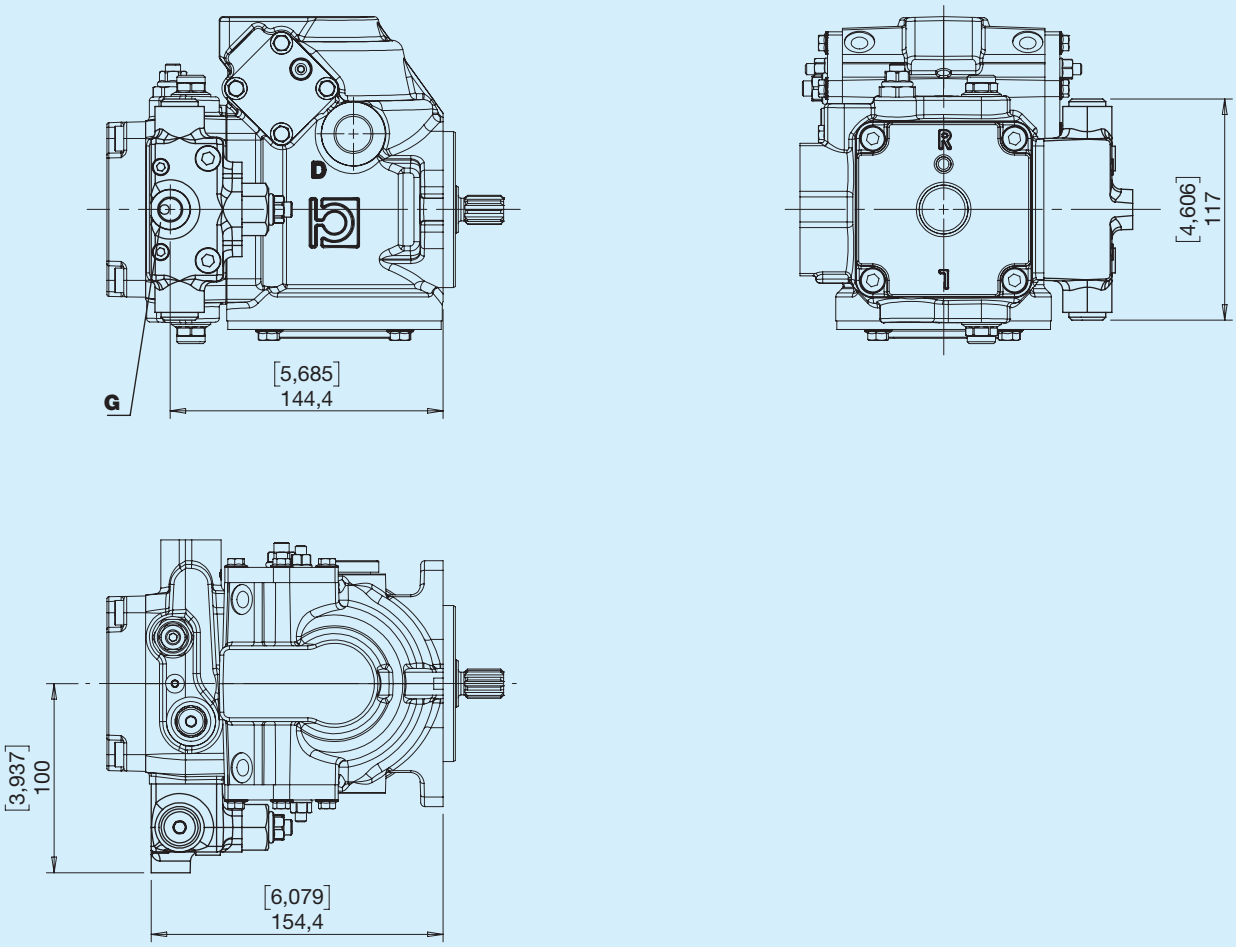

G - Low pressure intake G2 (GAS) or U2 (UNF)

Hydraulic diagram

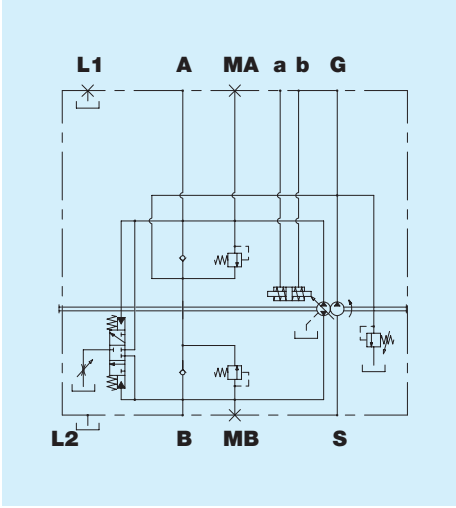

U Fixed flushing valve

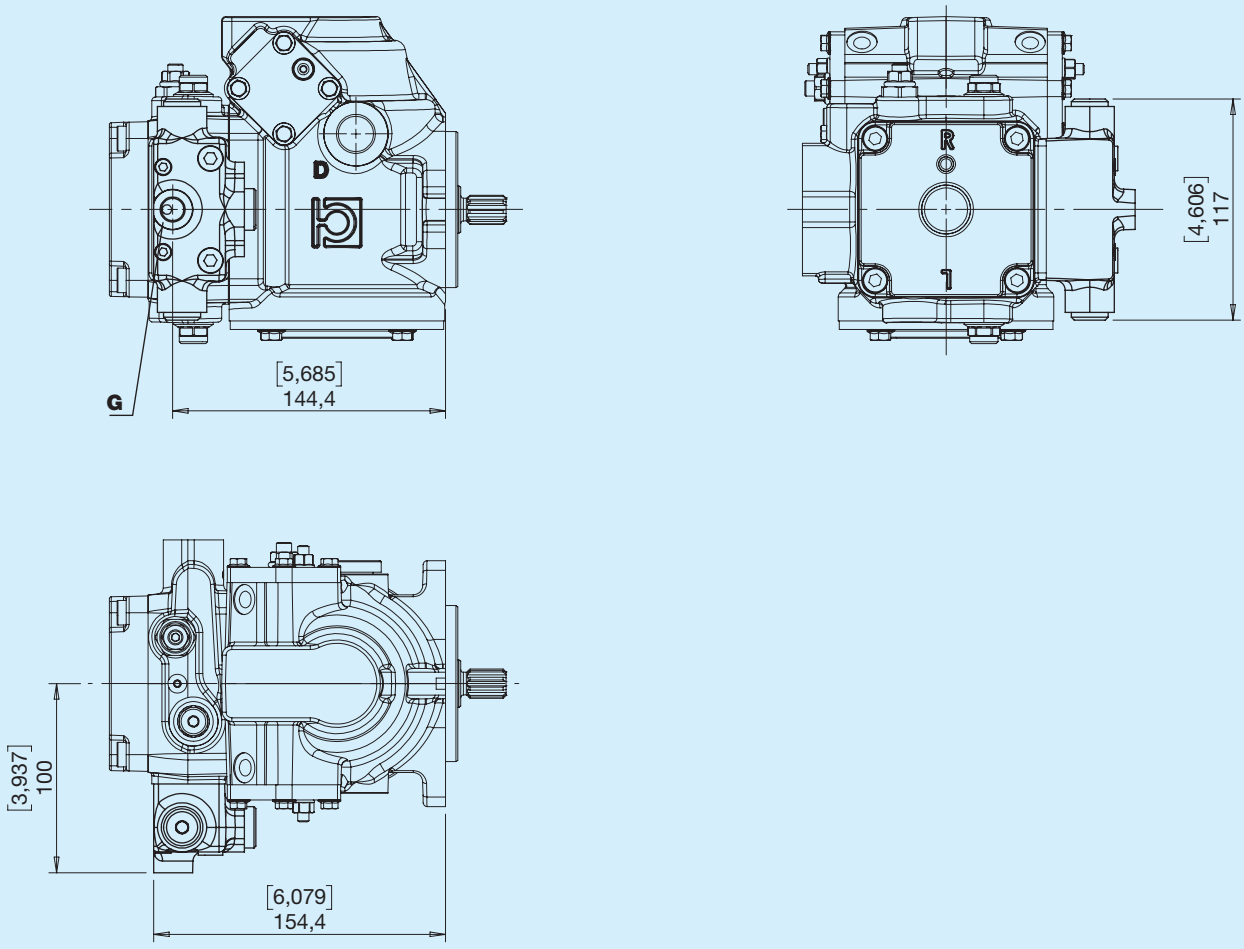

G - Low pressure intake G2 (GAS) or U2 (UNF)

Hydraulic diagram

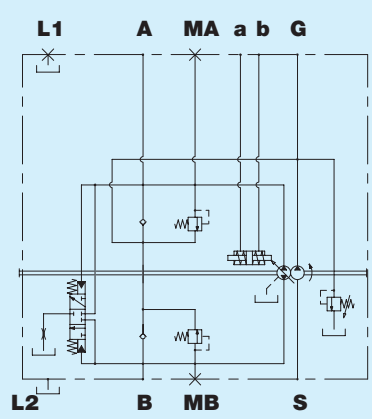

X Filter with clogging indicator

Electric differential indicator - 30 VDC - 0.2 A max

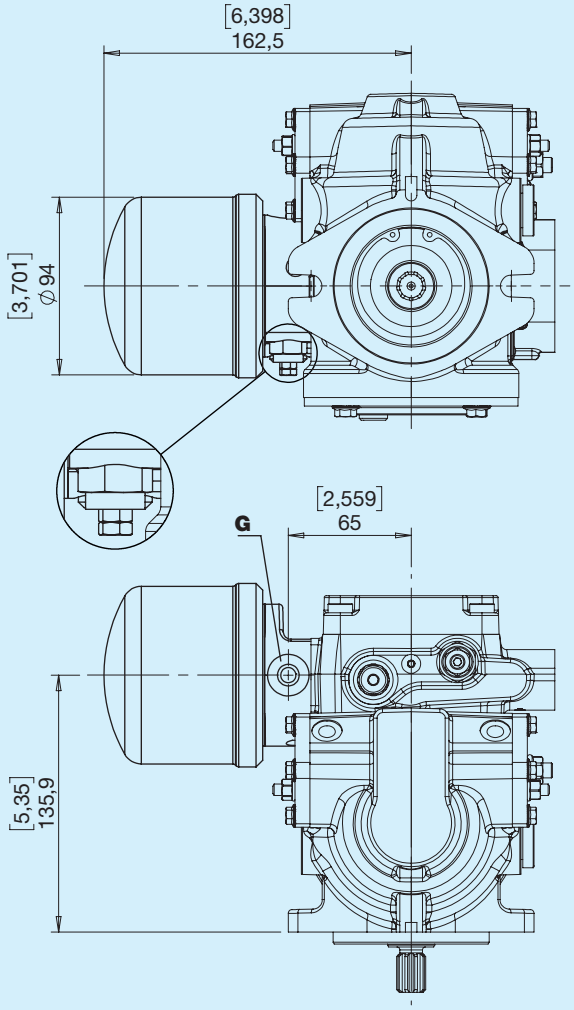

G - Filtered oil intake G2 (GAS) or U2 (UNF)

Hydraulic diagram

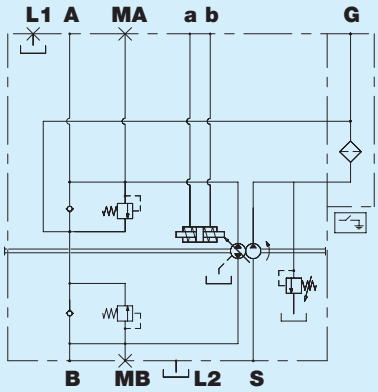

Y Filter without clogging indicator

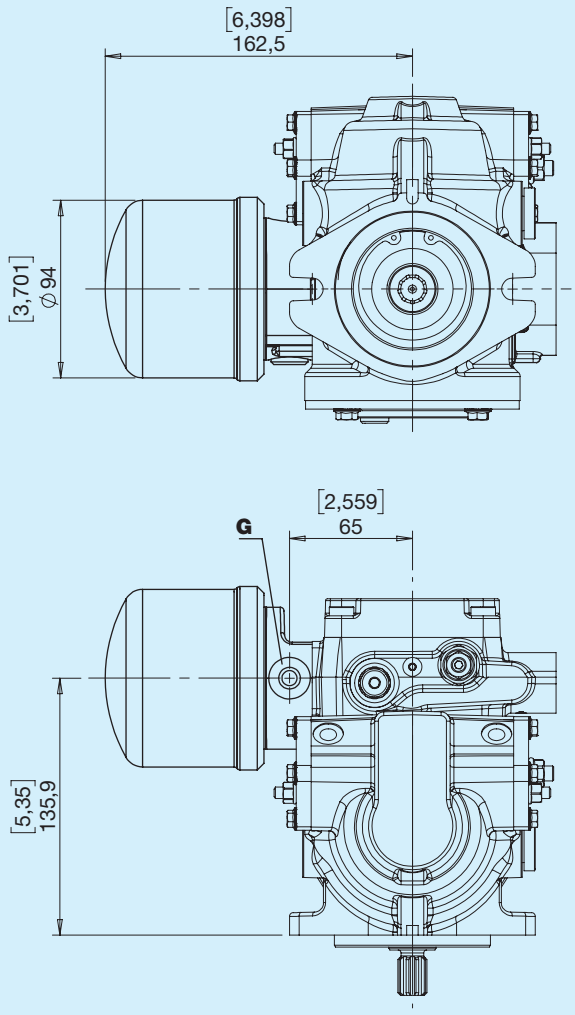

G - Filtered oil intake G2 (GAS) or U2 (UNF)

Hydraulic diagram

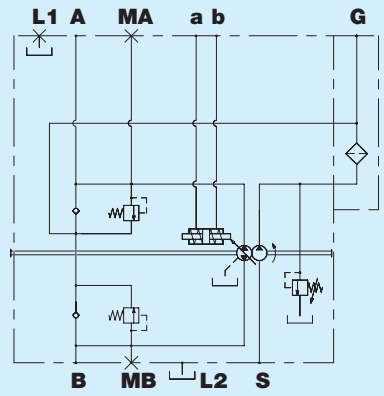

Instructions for ordering

HMPZB	1 2	3	4	5	6	7	8	9	10	11	12 13 14

1 2 — Displacement

11	**13**	**16**	**19**
12	**14**	**18**	

3 — Direction of rotation

R	Right	**L**	Left

4 — Flanges

A	SAE A	**B**	SAE B

5 — Direction of rotation

S	Single pump	**T**	Tandem primary pump	**C**	Tandem secondary pump	**B**	SHORT pump

6 — Shaft profile

J	Cylindrical Ø22.22	**X**	SAE 11T 16/32 DP	**A**	SAE 21T 16/32 DP for secondary tandem pump
V	SAE 9T 16/32 DP	**9**	SAE 13T 16/32 DP		

7 — Direction of rotation

G	Gas	**U**	UNF

8 — Controls

E	Electrical ON/OFF, closed centre 12V	**N**	Electrical ON/OFF, open centre 12V	**K**	Remote hydraulic	**W**	Electronic proportional control 24V
F	Electrical ON/OFF, closed centre 24V	**Q**	Electrical ON/OFF, open centre 24V	**S**	Electronic proportional control 12V		

9 — Valve calibration

B	150 bar	**E**	210 bar	**G**	250 bar	**L**	300 bar
D	180 bar	**H**	230 bar	**I**	280 bar	**M**	320 bar

10 — Versions

0	No special fittings, without feed pump	**5**	SAE A without feed pump	**A**	None with feed pump 8 cc	**N**	For tandem without feed pump
1	None with feed pump 5 cc	**8**	GR1 No special fittings, with feed pump 5 cc	**B**	SAE A with feed pump 8 cc		
2	SAE A with feed pump 5 cc	**9**	GR1 without feed pump	**H**	GR1 with 8cc feed pump		

11 — Accessories

0	No option	**J**	Cut-off	**U**	Fixed flushing valve	**S**	Multiple accessories
A	Angle sensor	**M**	Adjustable flushing valve	**X**	Filter with electric clogging indicator		
B	By-pass	**P**	Paint	**Y**	Filter without electric clogging indicator		

12 13 14 — Special versions

...

Double pump with 1 boost pump

The order code of a multiple pump is obtained by summing, as shown in the example, the codes of the individual pumps (stages) obtained by following the order instructions for the single pumps

Stage 1 **HM PZB 19 R A T 9 G K E N 0** + Stage 2 **HM PZB 19 R A C A G K E A 0**

tandem pump

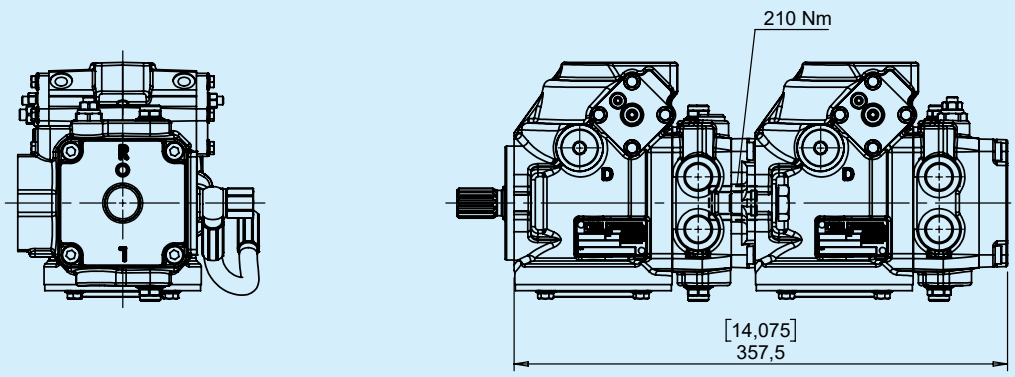

Stage 1 **HM PZB 19 R A T 9 G K E N 0** + Stage 2 **HM PZB 19 R A C A G K E B 0**

tandem pump with SAE A fitting

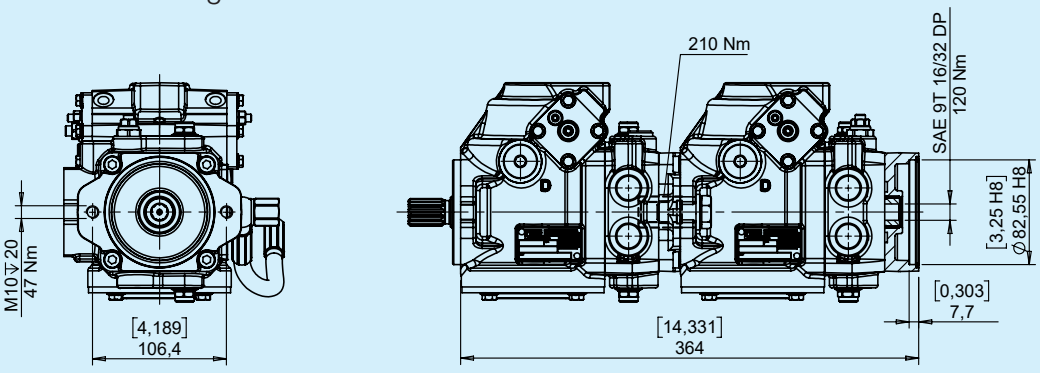

In tandem pumps with a boost pump it is mandatory to install a connecting pipe (not supplied) between a drain port of the first stage and a drain port of the second stage.

- The standard tandem configuration is with an 8 cc pump in the second stage.

Stage 1		Stage 2
HM PZB 19 R A T 9 G K E N 0	**+**	**HM PZB 19 R A C A G K E H 0**

tandem pump with GR1 fitting

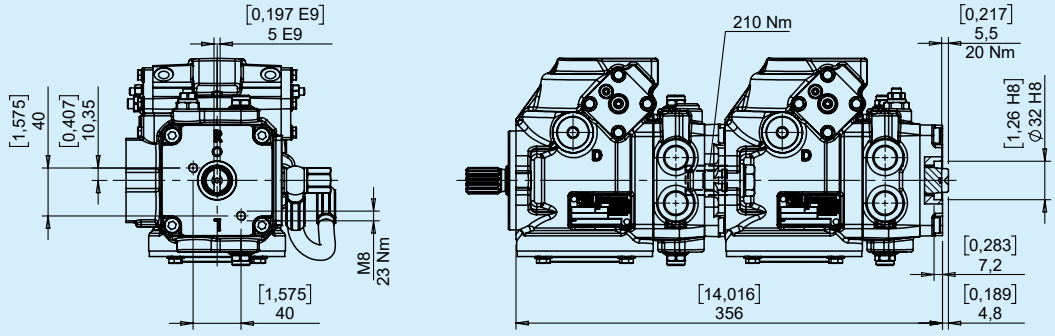

In tandem pumps with a boost pump it is mandatory to install a connecting pipe (not supplied) between a drain port of the first stage and a drain port of the second stage.

- The standard tandem configuration is with an 8 cc pump in the second stage.

Double pump, short version

The code for a short pump is obtained, as shown in the example, by following the ordering instructions for a single pump. Only the closed or SAE A configuration are available for this version.

HM PZB 19 R A B 9 G K E A 0

short pump

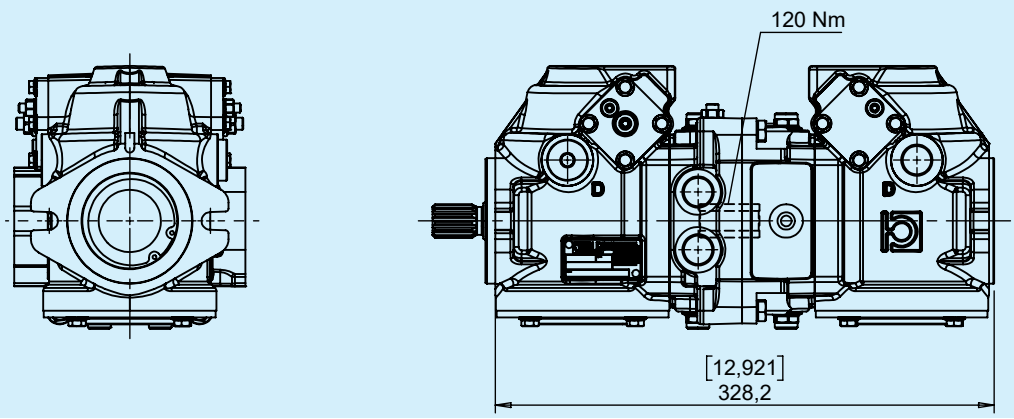

HM PZB 19 R A B 9 G K E B 0

short pump with SAE A fitting

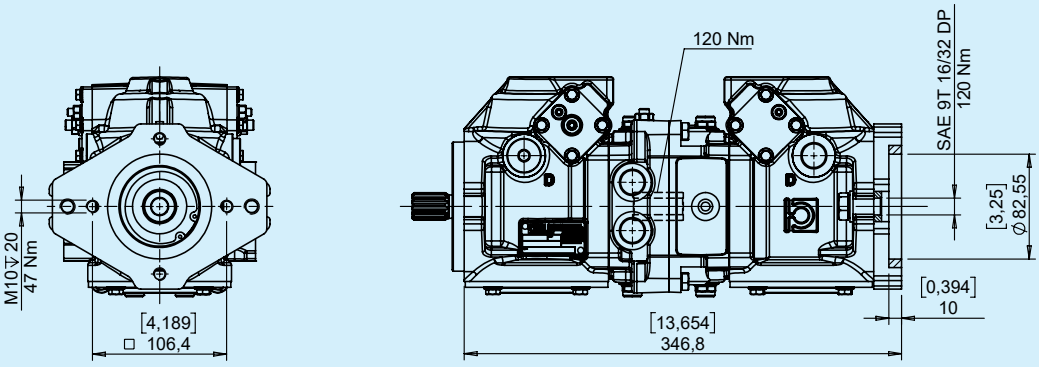

In tandem pumps with a boost pump it is mandatory to install a connecting pipe (not supplied) between a drain port of the first stage and a drain port of the second stage.

- The standard tandem configuration is with an 8 cc pump in the first stage.
- A configuration without a boost pump is also available.