MDT - Directional control valve

Before use, carefully read the GENERAL INSTRUCTIONS FOR USE OF DIRECTIONAL CONTROL VALVES

Nominal flow	**35 l/min** ***9.2 US gpm***
Nominal pressure	**250 bar** ***3625 psi***
Nominal inlet flow with electric actuators	**20 l/min** ***5.3 US gpm***
Maximum pressure with electric actuators	**180 bar** ***2610 psi***
Maximum tank pressure	**50 bar** ***725 psi***
Internal leakage (A or B -> P and T) p=100 bar (1450 psi)	**8 cm³/min** ***0.49 in³/min***
Temperature range	**-20°C +85°C NBR seals** ***(max peak +100°C)*** ***-20°C + 130°C HNBR seals***
Oil viscosity	**from 15 mm²/s to 90 mm²/s** ***(15 cSt to 90 cSt)***
Fluid	**Hydraulic fluids as defined in ISO 6743-4 standard**

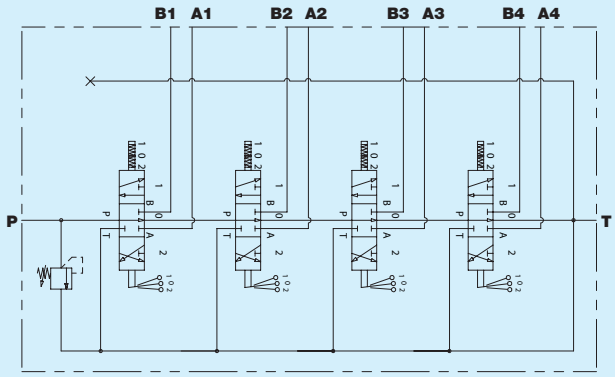

STANDARD version

Section

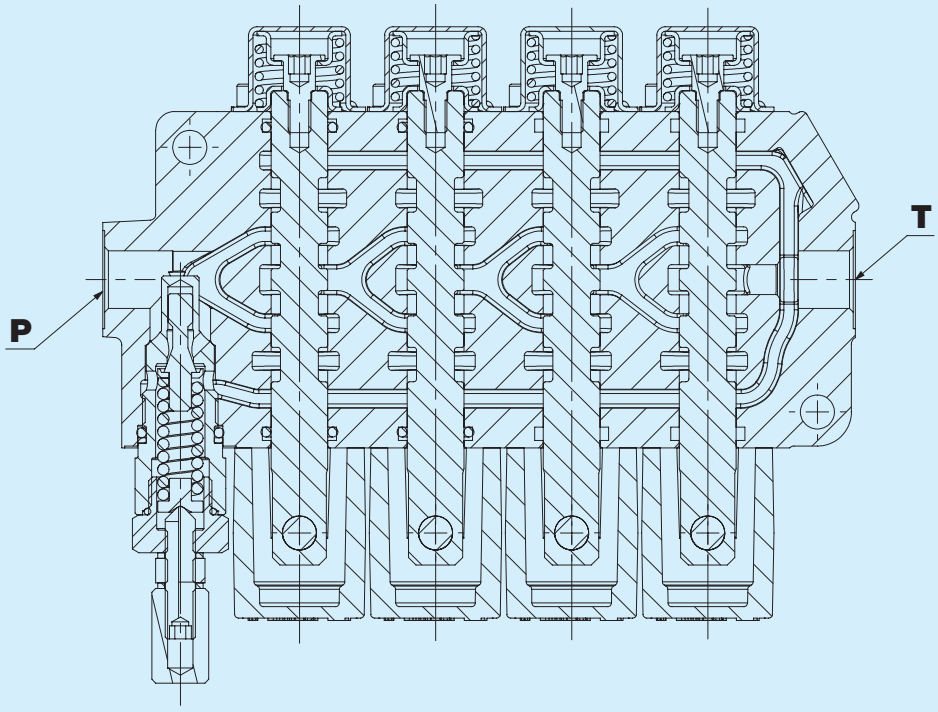

Dimensions

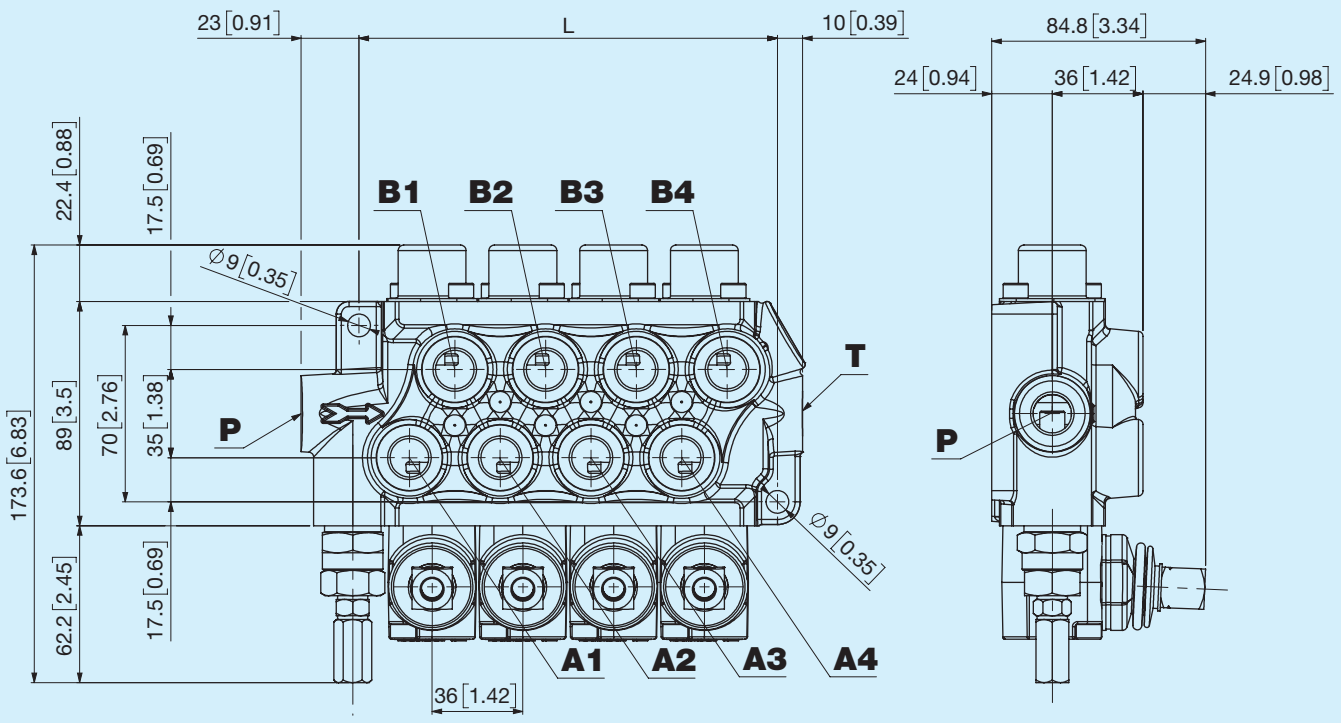

Standard

Dimensions per number of sections

Code	N° of sections	L		Weight	
		mm	in	kg	lb
4	4	169	6,6	6.3	13,9
5	5	205	8,1	7.7	16,9
6	6	241	9,5	9,1	20
7	7	277	10,9	10,5	23,1

Pressure drops P-T

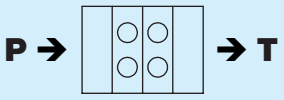

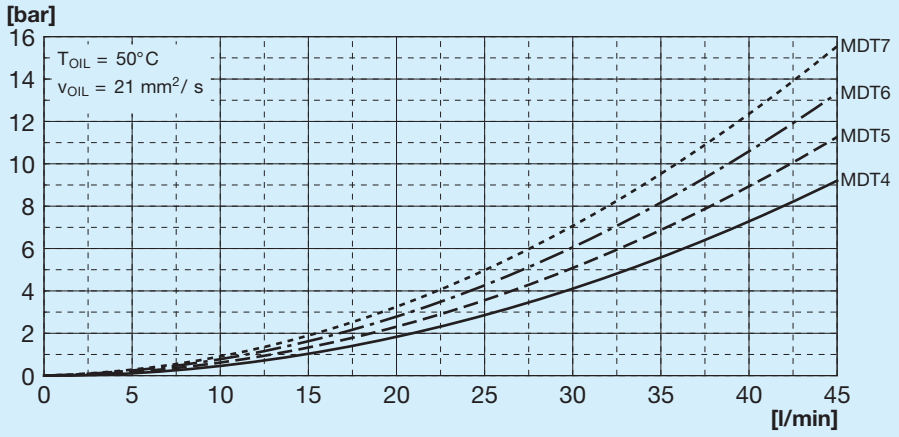

Testing parameters: Spool type **01**

Pressure drops P-A

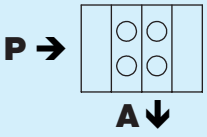

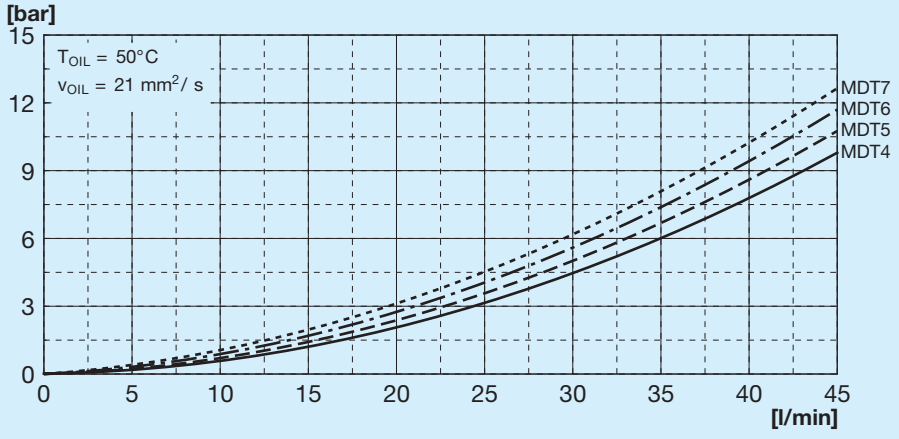

Testing parameters: Spool type **01**

Pressure drops B1-T

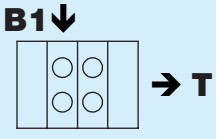

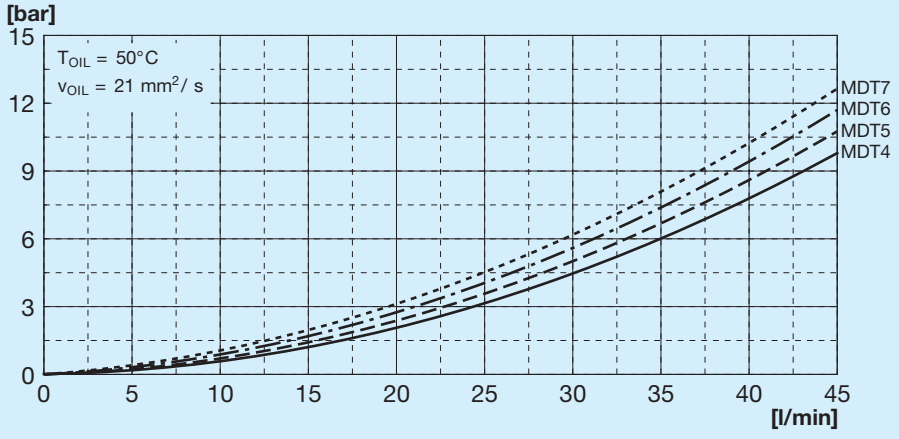

Testing parameters: Spool type **01**

M Centralised microswitch

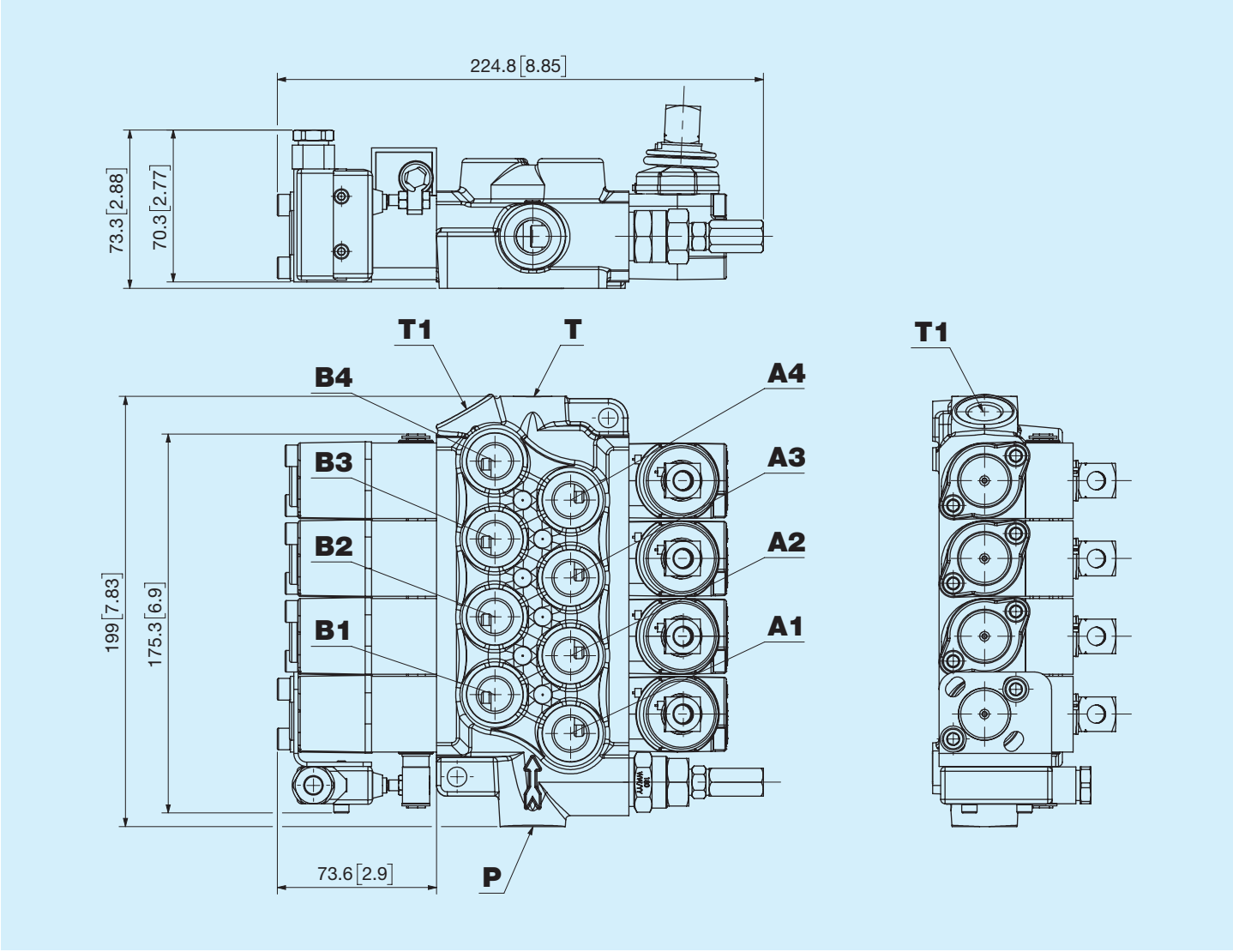

Characteristics of microswitch positioner

Contact rating	16(5)A at 250V A.C 50 Hz 3A at 30V D.C. L/R= 5 ms
Temperature range	-20° to 85° C
Expected mechanical life	10 million cycles at 1 Hz
Insulation	Up to 100 MΩ

Dual effect microswitch

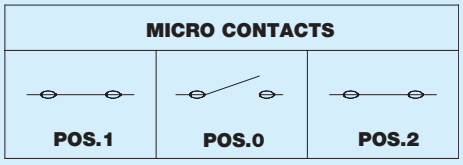

Type of inlet

S Left (standard)

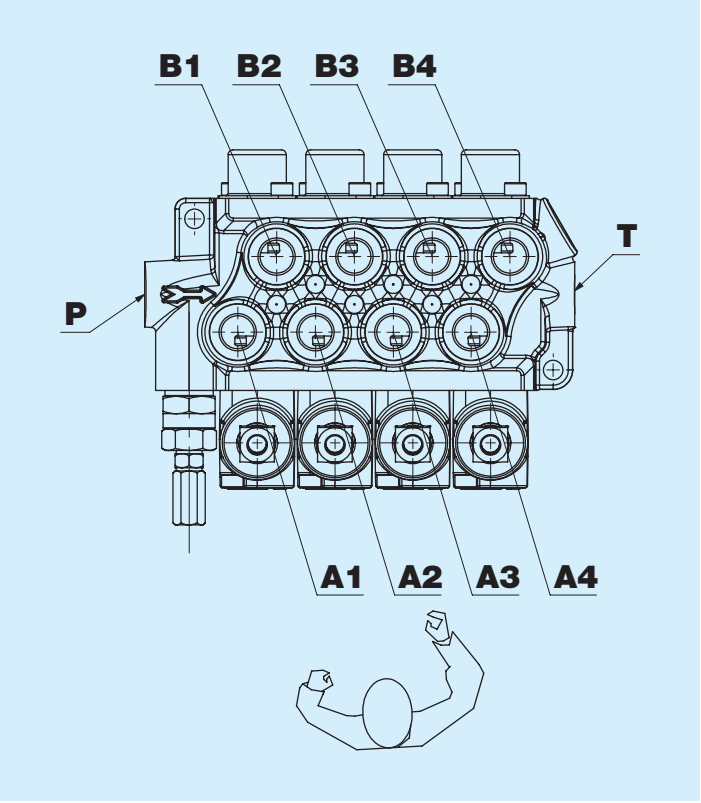

D Right

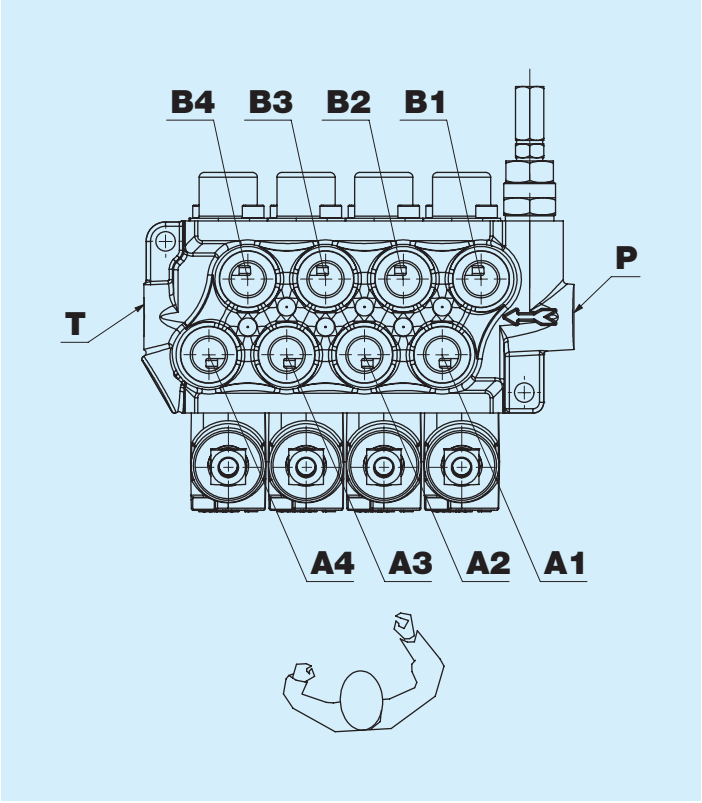

Port A is usually the nearest port to the actuator side.

Thread ports

Thread port P

Code	Type	Torque Nm
B	1/2'' GAS ISO 1179	70
A	3/8'' GAS ISO 1179	35
T	M16x1.5 ISO 9974	24
C	M18x1.5 ISO 9974	40
E	3/4'' - 16 SAE ISO 11926	50
P	9/16'' - 18 SAE ISO 11926	21

Thread ports A - B

Code	Type	Torque Nm
B	1/2'' GAS ISO 1179	70
A	3/8'' GAS ISO 1179	35
T	M16x1.5 ISO 9974	24
C	M18x1.5 ISO 9974	40
E	3/4'' - 16 SAE ISO 11926	50
P	9/16'' - 18 SAE ISO 11926	21

Thread ports T - T1

Code	Type	Torque Nm
B	1/2'' GAS ISO 1179	70
A	3/8'' GAS ISO 1179	35
T	M16x1.5 ISO 9974	24
C	M18x1.5 ISO 9974	40
E	3/4'' - 16 SAE ISO 11926	50
P	9/16'' - 18 SAE ISO 11926	21

L Standard kit for lever holder

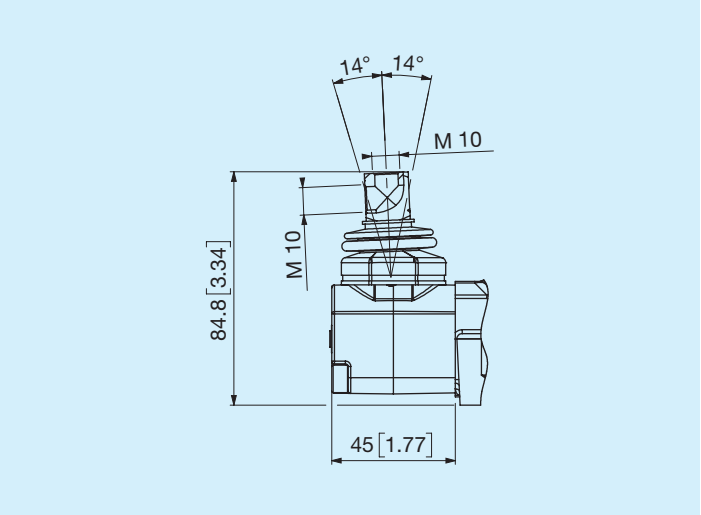

Z Lever holder with stroke limiter

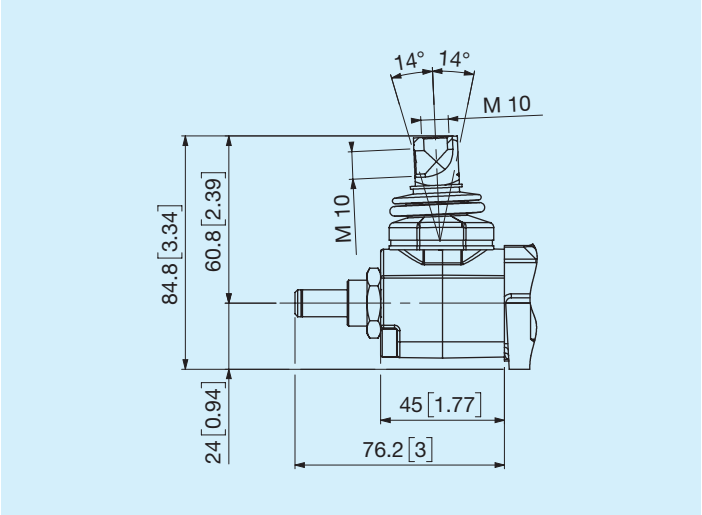

A Without lever holder, standard appendix

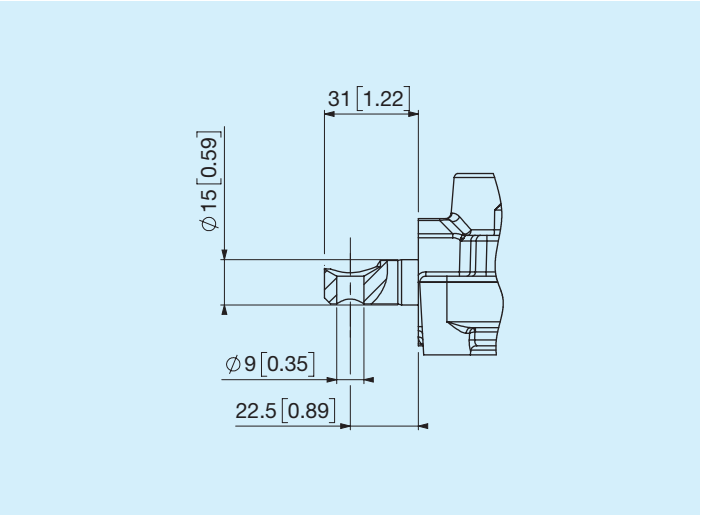

C Without lever holder, flat appendix

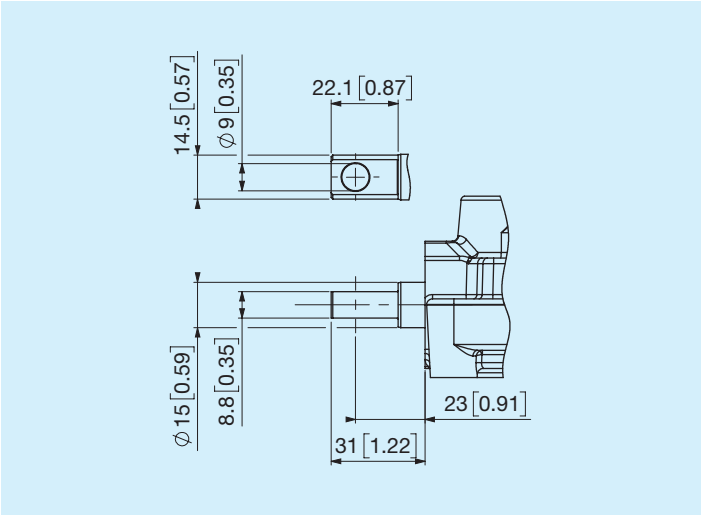

T Cable setting

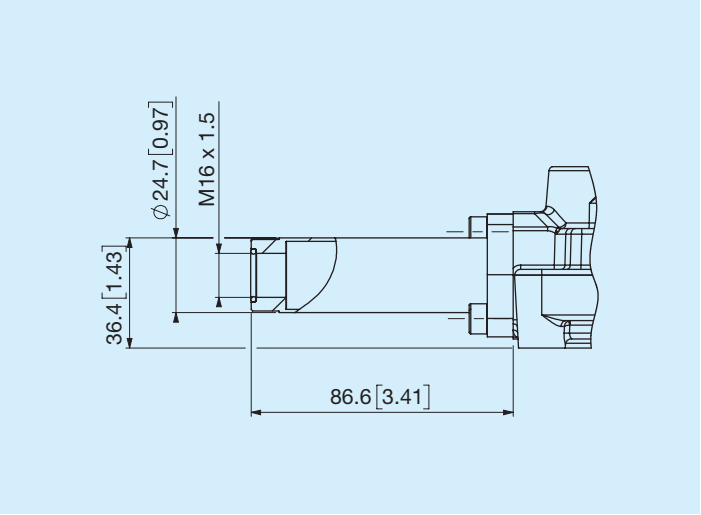

E Dual effect electric control

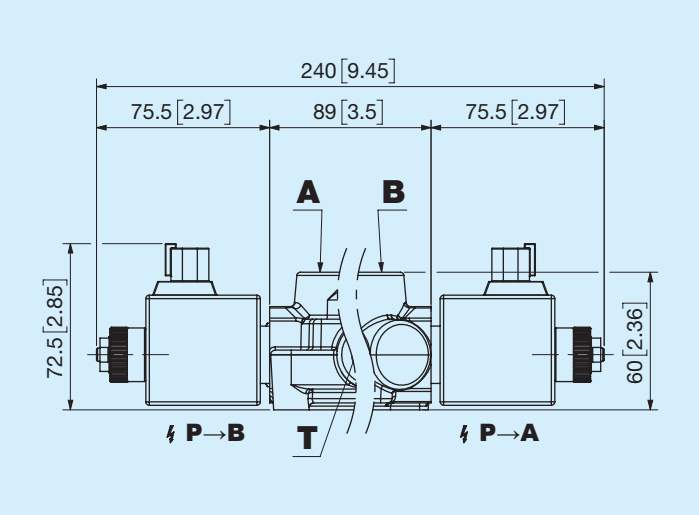

Type of coil	12V	24V	
Resistance at 20°C	4	18	Ω (± 7%)
Absorbed current	3	1,2	A (± 5%)
Power	36	30	W (± 5%)

D Single effect electric control port A side

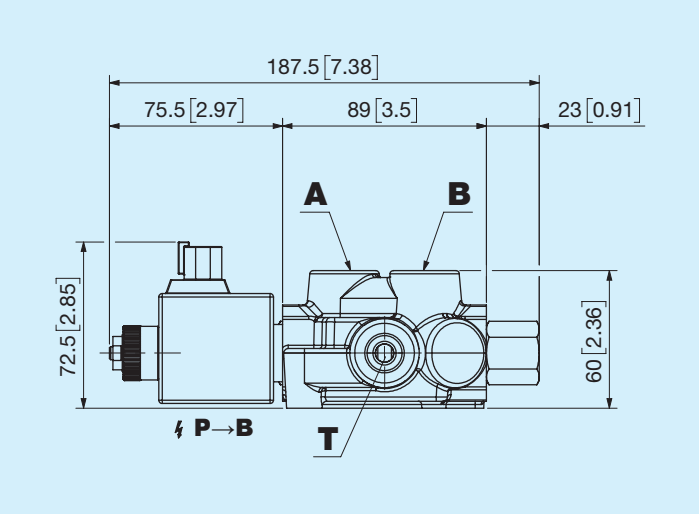

J Single effect electric control port B side

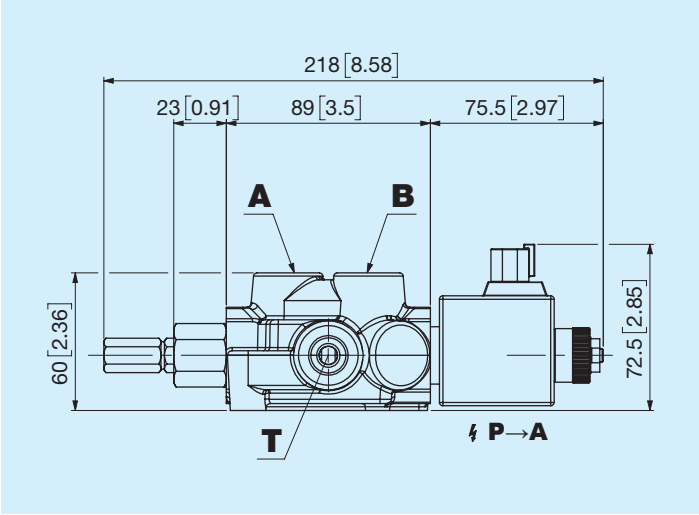

Performance limits for electric actuator

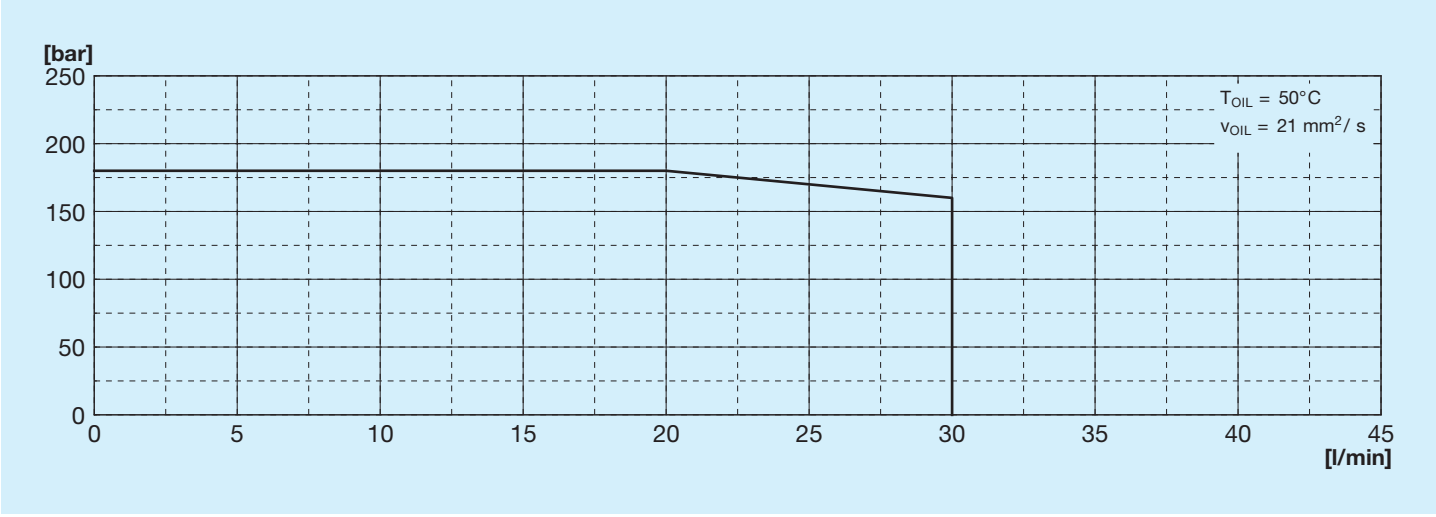

K Hydraulic control

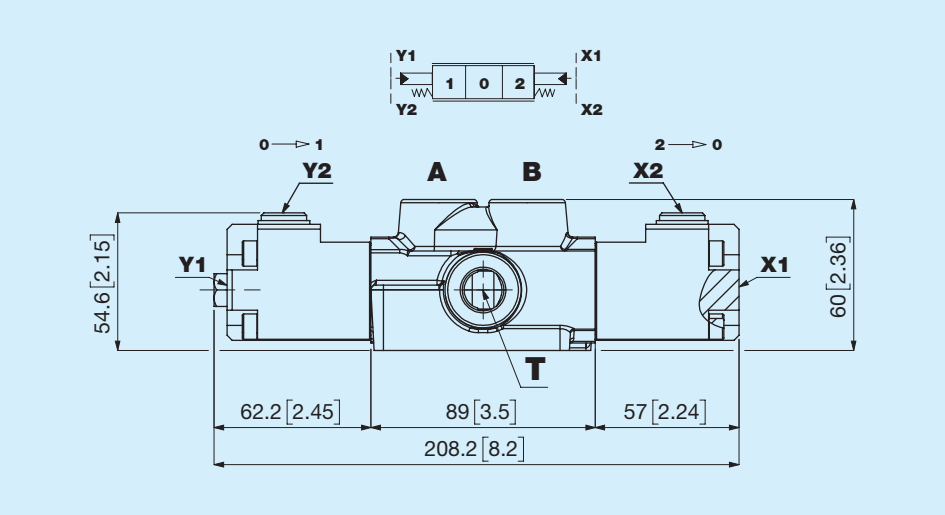

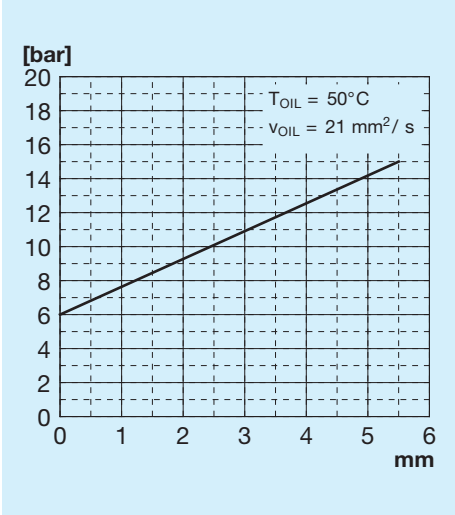

M Joystick

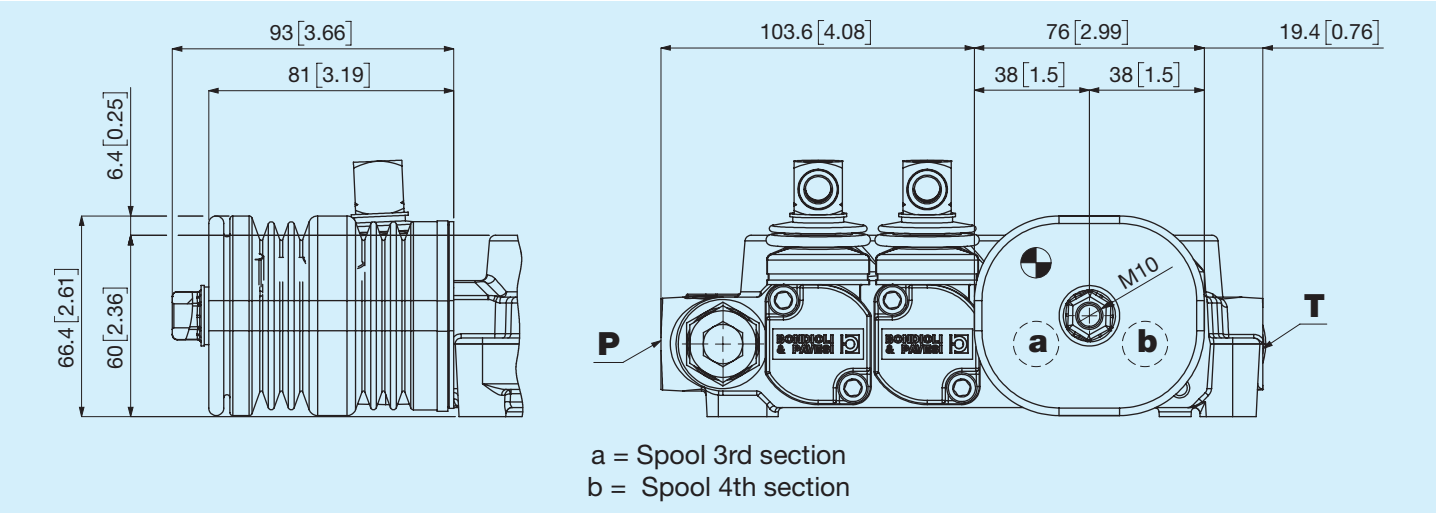

a = Spool 3rd section
b = Spool 4th section

M Joystick with spool lock

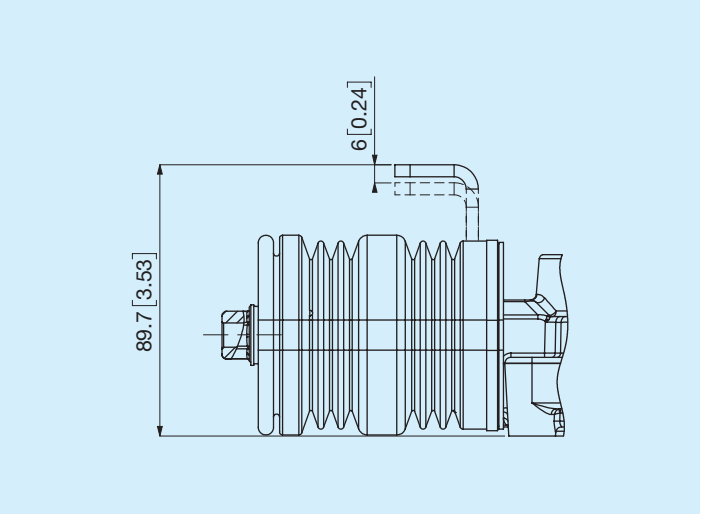

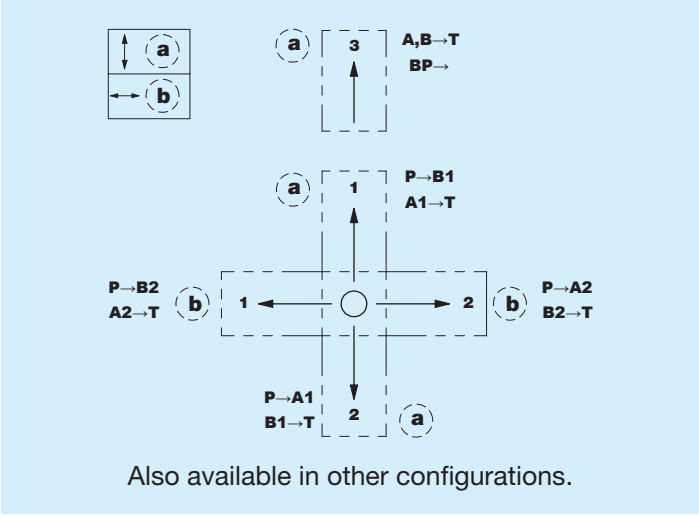

Also available in other configurations.

Spool types

01 Spool type

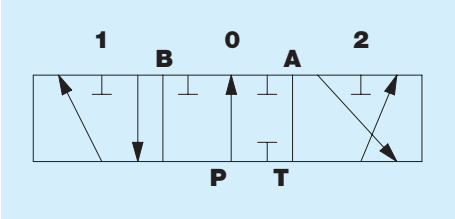

Positions

3	1	0	2	4
	P → B A → T BP ⊣	P, T ⊣ A, B ⊣ BP →	P → A B → T BP ⊣	

03 Spool type

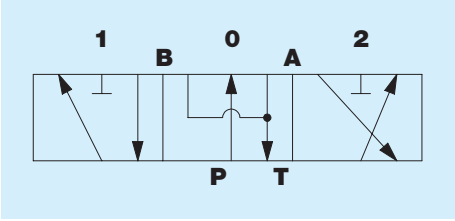

Positions

3	1	0	2	4
	P → B A → T BP ⊣	A, B → T BP →	P → A B → T BP ⊣	

04 Spool type

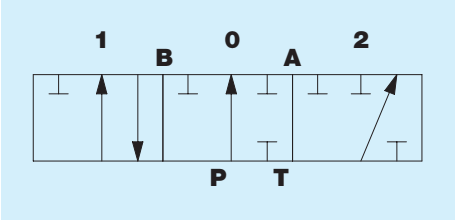

Positions

3	1	0	2	4
	A → T B ⊣ BP →	A, B, T ⊣ BP →	P → A B, T ⊣ BP ⊣	

05 Spool type

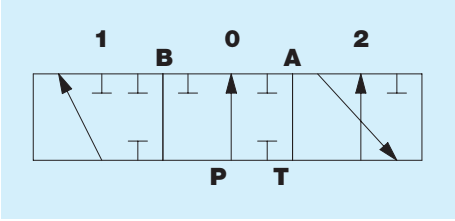

Positions

3	1	0	2	4
	P → B A, T ⊣ BP ⊣	A, B, T ⊣ BP →	A ⊣ B → T BP →	

07 Spool type

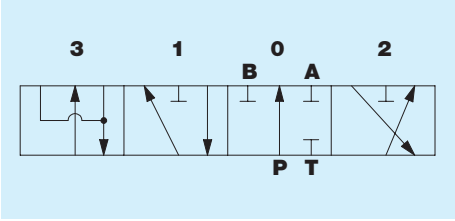

Positions

3	1	0	2	4
A, B → T BP →	P → B A → T BP ⊣	A, B, T ⊣ BP →	P → A B → T BP ⊣	

08 Spool type

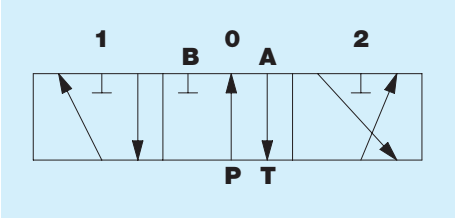

Positions

3	1	0	2	4
	P → B A → T BP ⊣	B ⊣ A → T BP →	P → A B → T BP ⊣	

10 Spool type

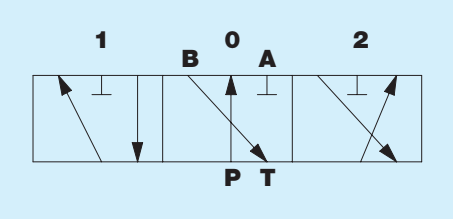

Positions

3	1	0	2	4
	P → B A → T BP ⊣	A ⊣ B → T BP →	P → A B → T BP ⊣	

28 Spool type

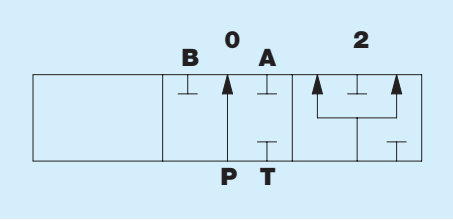

Positions

3	1	0	2	4
		A, B ⊣ BP →	P → A, B BP ⊣	

0A

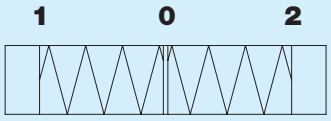

Neutral position in 0

0B

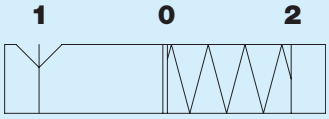

Neutral position in 0, detent in 1

0C

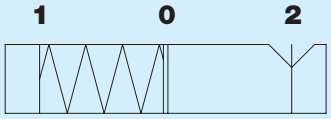

Neutral position in 0, detent in 2

0D

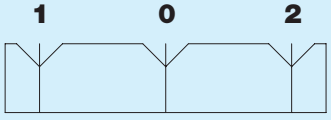

Detent in 0, 1, 2

0E

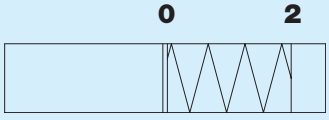

Neutral position in 0

0F

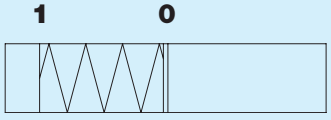

Neutral position in 0

0H

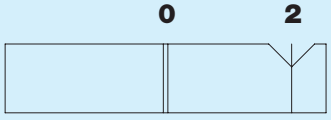

Detent in 2

0L

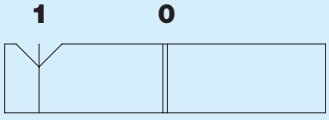

Detent in 1

0Q

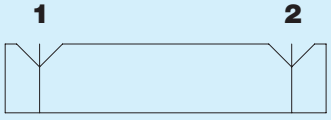

Detent in 1, 2

0R

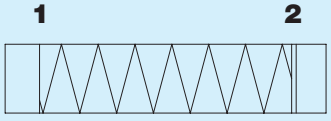

Neutral position in 2

0S

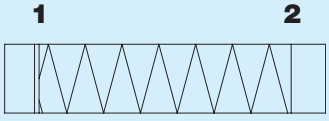

Neutral position in 1

NS

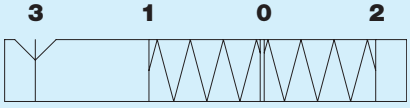

Neutral position in 0, detent in 3

Straight standard knob

Code	Description	h [mm]	h [in]
A	Straight standard knob	109	4,3
B	Straight standard knob	134	5.28
C	Straight standard knob	184	7,24
D	Straight standard knob	214	8,42
E	Straight standard knob	254	10
F	Straight standard knob	304	11,97

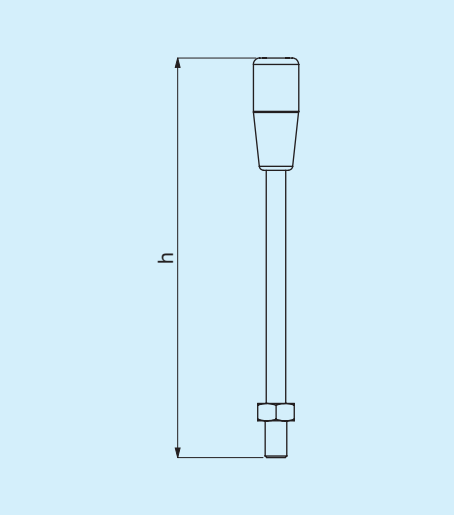

Ergonomic lever

Code	Description	h [mm]	h [in]
L	Straight vertical	180	7.09
O	Bent 15° vertical	180	7.09
R	Bent 30° vertical	180	7.09
M	Straight horizontal	180	7.09
Y	Bent 15° horizontal	180	7.09
Q	Bent 30° horizontal	180	7.09

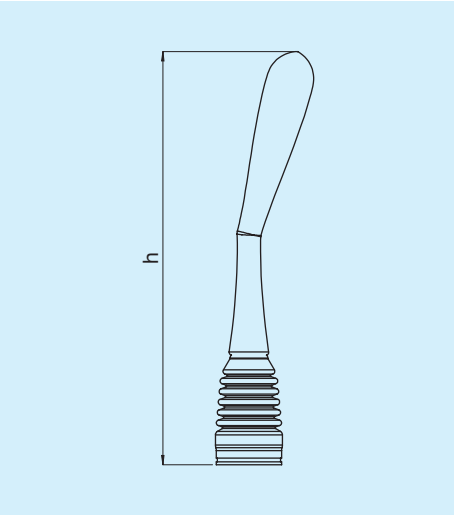

Lever holder positions

A Straight

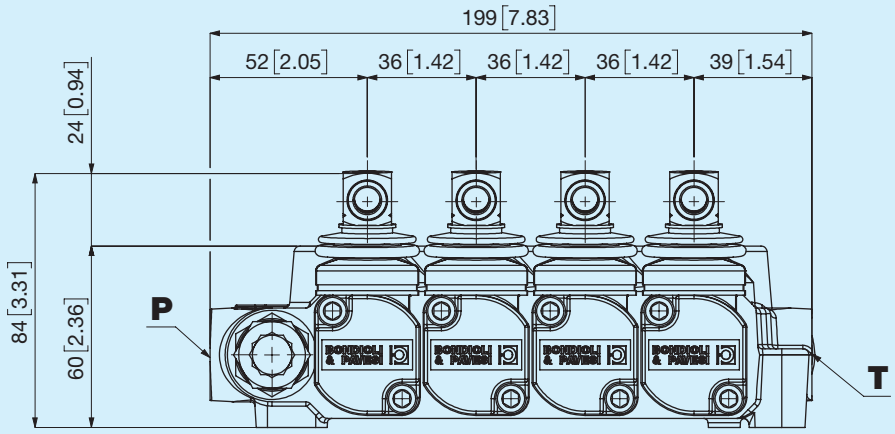

C Rotated 180°

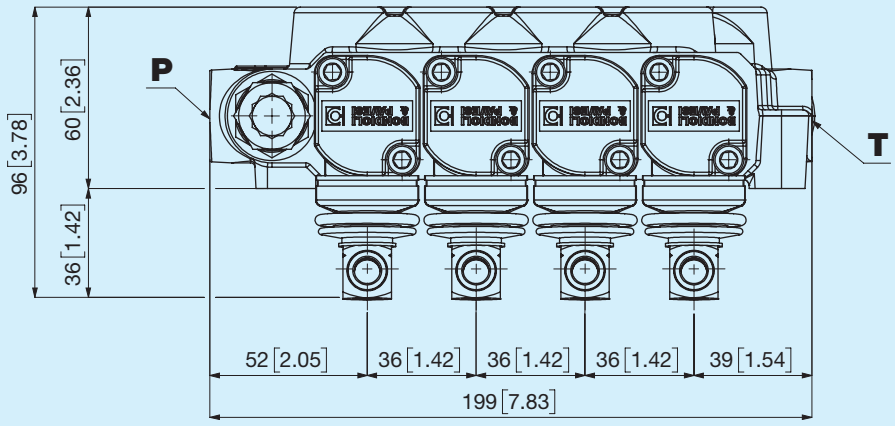

D Rotated 90° towards T

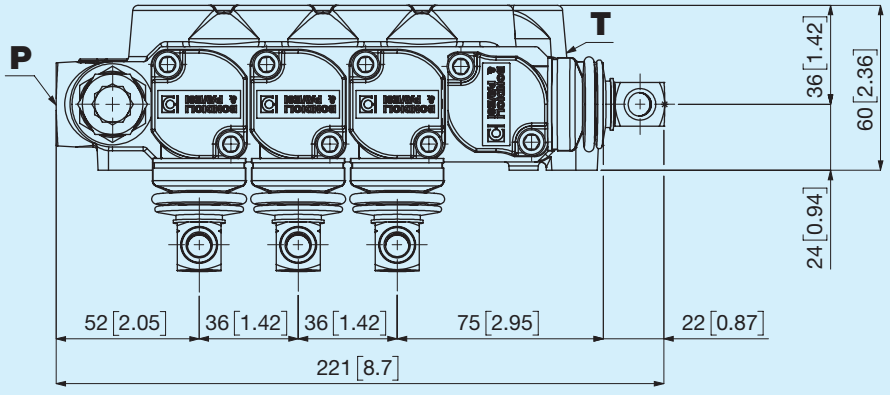

Options spool control side

N None

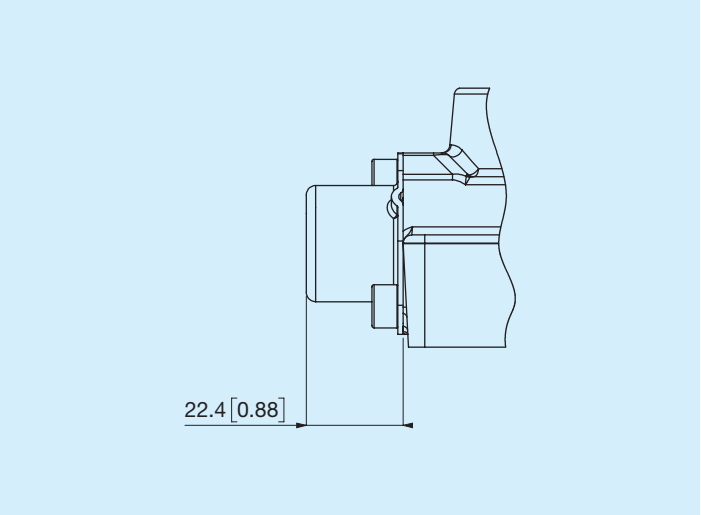

C Stroke limiter

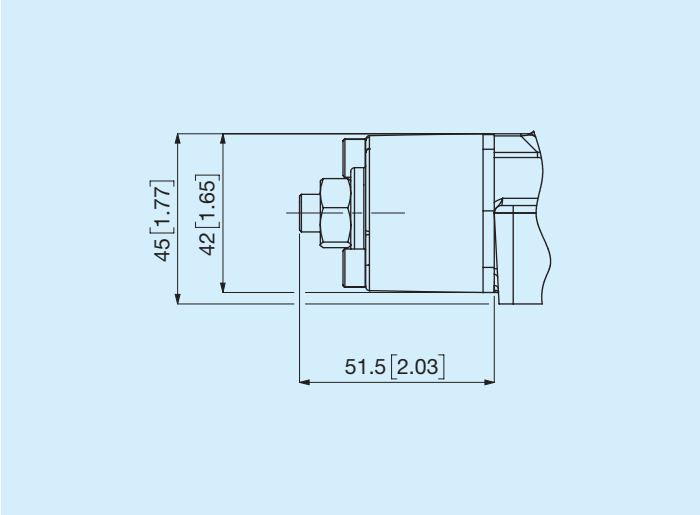

C.O. - Carry Over

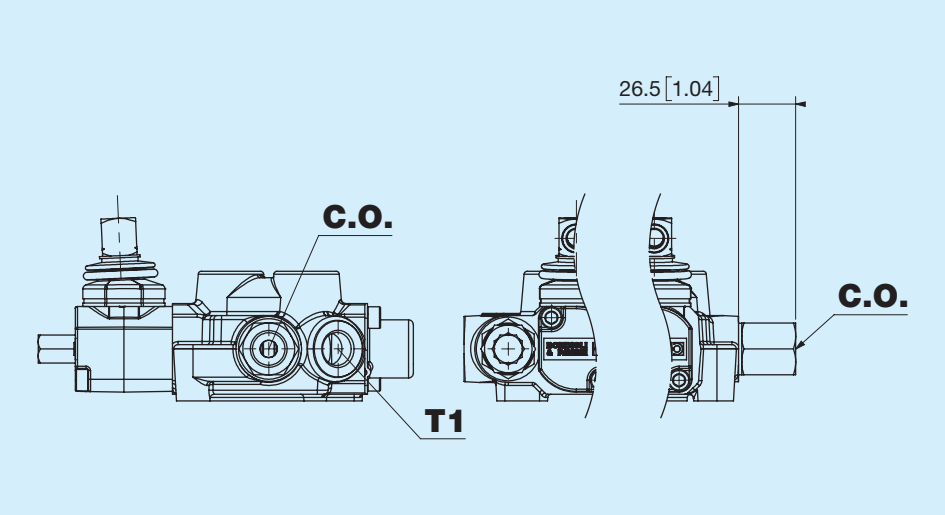

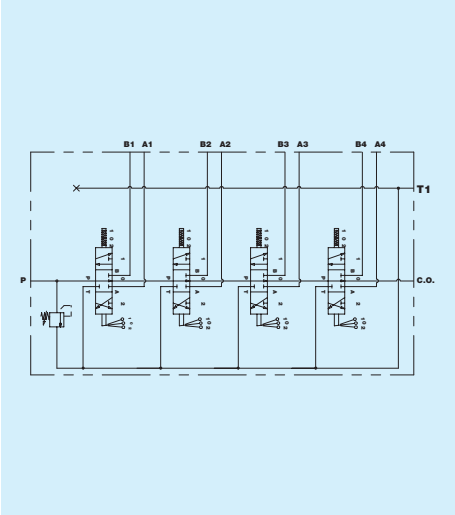

Thread port Carry Over

Code	Type	Torque Nm
0	Not processed	
A	3/8'' GAS ISO 1179	35
C	M18x1.5 ISO 9974	40
E	3/4'' - 16 SAE ISO 11926	50

Instructions for ordering

Repeat for each section of the valve

MDT	1	2	3	4	5 6	7	8	9	10	11 12	13	14 15	16

1 Number of sections

4	Sections	**5**	Sections	**6**	Sections	**7**	Sections

2 General options

N	None	**Z**	Zinc plating	**O**	Painted and centr. microswitch
V	Black paint	**M**	Centralised microswitch	**Y**	Zinc plating and centr. microswitch

3 Type of inlet

S	Left (standard)	**D**	Right

4 Thread port P

A	3/8'' GAS ISO 1179	**T**	M16x1.5 ISO 9974	**E**	3/4'' - 16 SAE ISO 11926
B	1/2'' GAS ISO 1179	**C**	M18x1.5 ISO 9974	**P**	9/16'' - 18 SAE ISO 11926

5 6 Maximum pressure relief valve type

00	VMP replacement plug	**11**	110 bar	**17**	170 bar	**23**	230 bar
06	60 bar	**12**	120 bar	**18**	180 bar	**24**	240 bar
07	70 bar	**13**	130 bar	**19**	190 bar	**25**	250 bar
08	80 bar	**14**	140 bar	**20**	200 bar		
09	90 bar	**15**	150 bar	**21**	210 bar		
10	100 bar	**16**	160 bar	**22**	220 bar		

7 Sealing type maximum pressure relief valve

G	Grub screw	**P**	Sealed	**N**	None
C	Cap	**R**	Sealing provided		

8 Thread ports A - B

B	1/2'' GAS ISO 1179	**T**	M16x1.5 ISO 9974	**E**	3/4'' - 16 SAE ISO 11926
A	3/8'' GAS ISO 1179	**C**	M18x1.5 ISO 9974	**P**	9/16'' - 18 SAE ISO 11926

9 Type of section

T	Tandem (standard)

10 Actuators

N	None	**C**	Without lever holder, flat appendix	**E**	Dual effect electric control	**K**	Hydraulic control
L	Standard kit for lever holder	**Z**	Lever holder with stroke limiter	**D**	Single effect electric control port A side	**M**	Joystick
A	Without lever holder, standard appendix	**T**	Cable setting	**J**	Single effect electric control port B side	**G**	Joystick with spool lock

11 12 Spool types

01	Spool type	**04**	Spool type	**07**	Spool type	**10**	Spool type
03	Spool type	**05**	Spool type	**08**	Spool type	**28**	Spool type

13 Spool options

A	Standard spool with negative coating	**B**	Nickel-plated spool with negative coating	**C**	Standard spool with positive coating	**D**	Nickel-plated spool with positive coating

Instructions for ordering

17	18	19	20	21	22

14	15

Spool control

NN	None	**0D**	Detent in 0, 1, 2	**0L**	Detent in 1	**NS**	Neutral position in 0, detent in 3
0A	Neutral position in 0	**0E**	Neutral position in 0	**0Q**	Detent in 1, 2	**...**	
0B	Neutral position in 0, detent in 1	**0F**	Neutral position in 0	**0R**	Neutral position in 2	**...**	For selection, see the relevant chapter
0C	Neutral position in 0, detent in 2	**0H**	Detent in 2	**0S**	Neutral position in 1		

16

Lever options

N	None	**C**	h 184 mm / 7.24 in	**L**	Straight vertical	**Y**	Bent 15° horizontal
S	Without lever	**D**	h 214 mm / 8.42 in	**O**	Bent 15° vertical	**Q**	Bent 30° horizontal
A	h 109 mm / 4.3 in	**E**	h 254 mm / 10 in	**R**	Bent 30° vertical		
B	h 134 mm / 5.28 in	**F**	h 304 mm / 11.97 in	**M**	Straight horizontal		

17

Lever holder positions

A	Straight	**C**	Rotated 180°	**N**	None
B	Rotated 90° towards P (right inlet)	**D**	Rotated 90° towards T		

18

Options spool control side

N	None	**C**	Stroke limiter

19

Voltage and connector

N	None	**B**	24V DIN 43650	**H**	24V DEUTSCH DT04-2P
A	12V DIN 43650	**G**	12V DEUTSCH DT04-2P		

20

Thread port T

A	3/8'' GAS ISO 1179	**T**	M16x1.5 ISO 9974	**E**	3/4'' - 16 SAE ISO 11926
B	1/2'' GAS ISO 1179	**C**	M18x1.5 ISO 9974	**P**	9/16'' - 18 SAE ISO 11926

21

Thread port Carry Over

0	Not processed	**A**	3/8'' GAS ISO 1179	**C**	M18x1.5 ISO 9974	**E**	3/4'' - 16 SAE ISO 11926

22

Options on port T - C.O.

A	T open - C.O. not processed (standard)	**B**	T1 open - C.O. open	**C**	T1 open - C.O. plugged	**D**	T1 open - T set up for C.O.