Radial piston motors

HPR2 210-400

Series 2 HPR motors

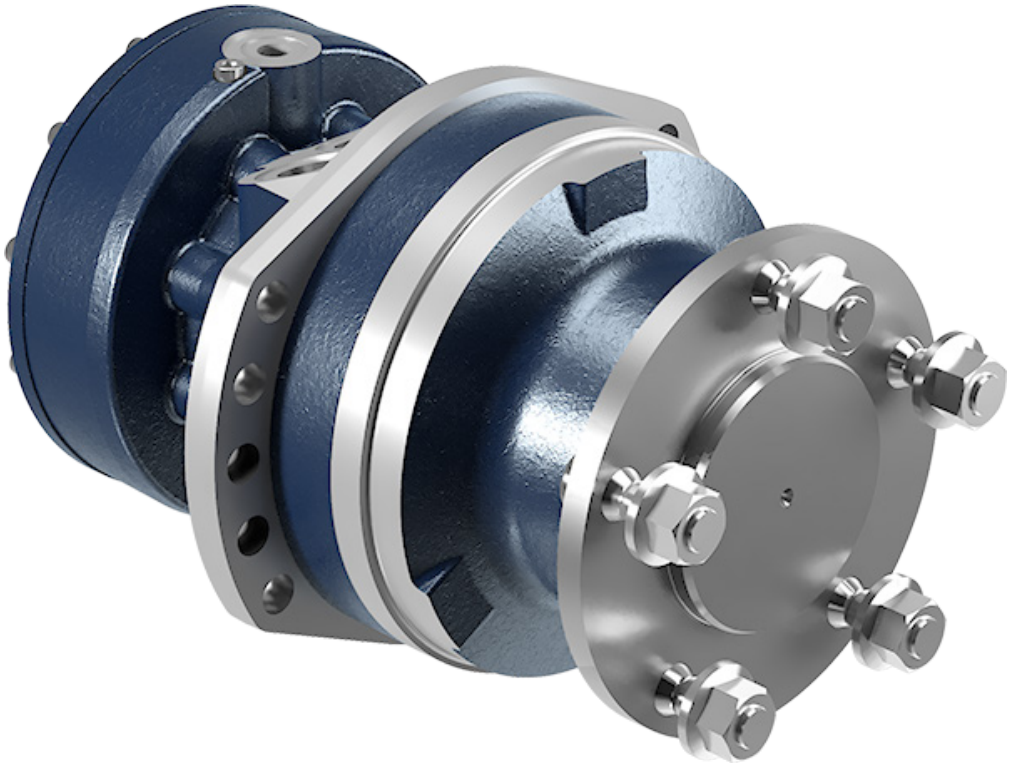

Before use, carefully read the GENERAL INSTRUCTIONS FOR USE OF CLOSED CIRCUIT AXIAL PISTON PUMPS AND MOTORS.

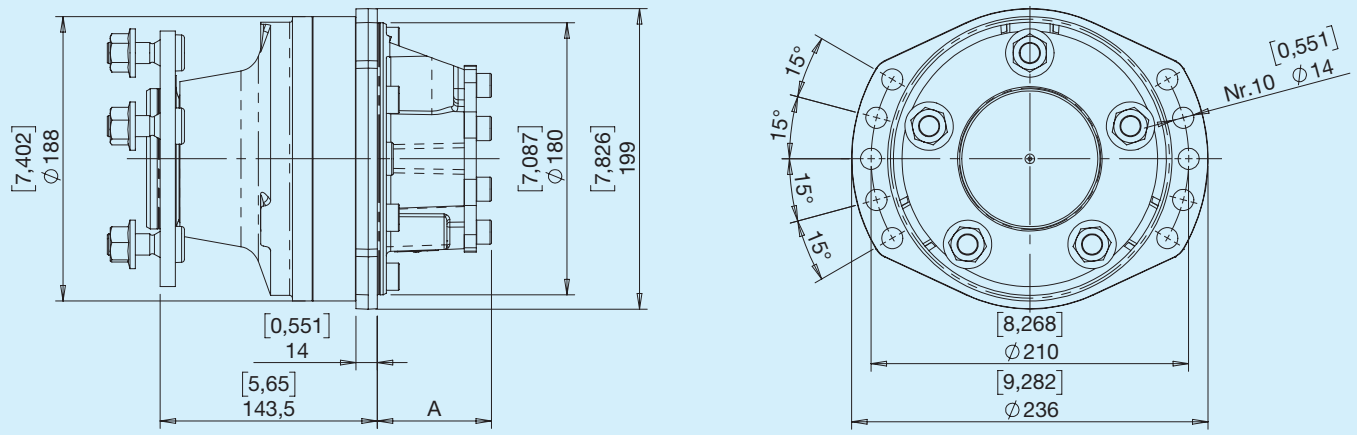

Wheel drive version

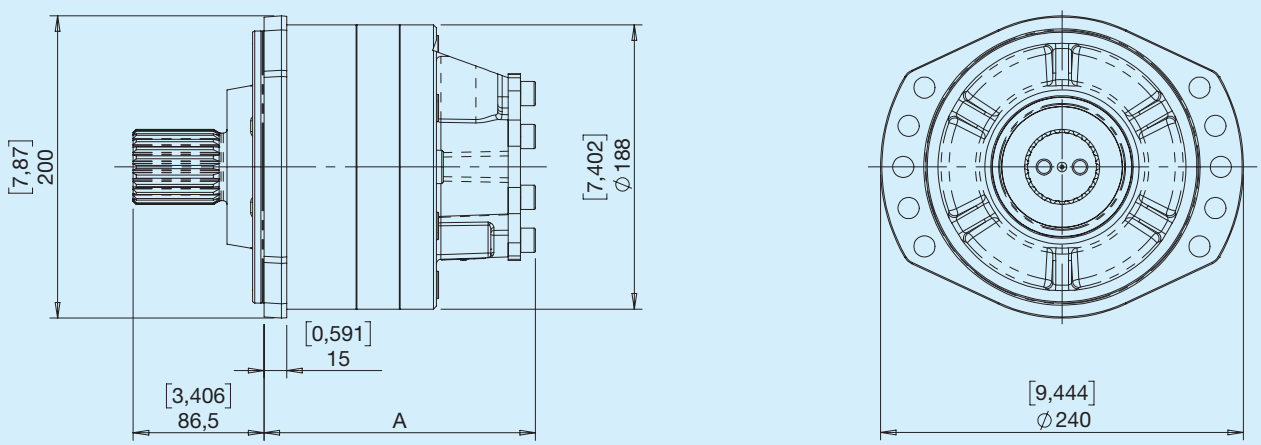

Male splined shaft version

HPR2	Nominal displacement				Rotational speed		Operating pressure		Max power		Weight	
	Fixed/ 1st speed		**2nd speed**		**Fixed/ 1st speed**	**2nd speed**			**Fixed/ 1st speed**	**2nd speed**		
	cm³	**in³**	**cm³**	**in³**	**RPM**	**RPM**	**bar**	**psi**	**kW**	**kW**	**kg**	**lbs**
210	212	12.94	**106**	6.47	470	470	450	6525	18	12	33	73
230	235	14.34	**118**	7.20	435	435	450	6525	18	12	33	73
260	260	15.87	**130**	7.93	390	390	450	6525	18	12	33	73
330	332	20.26	**166**	10.13	265	336	400	5800	22	16	33	73
360	366	22.33	**183**	11.17	245	311	400	5800	22	16	33	73
400	402	24.53	**201**	12.27	220	279	400	5800	22	16	33	73

R Rear (wheel)

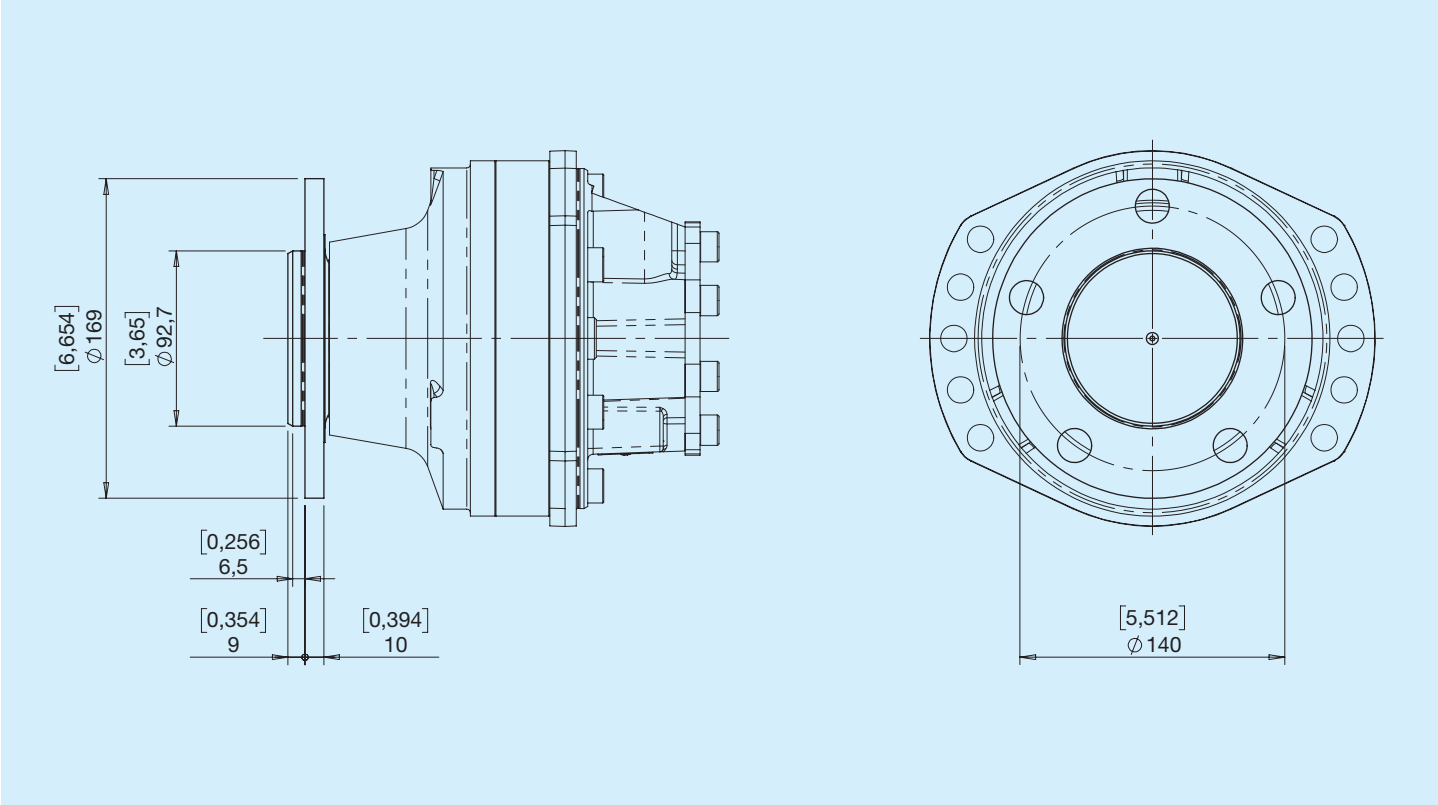

1 Rear (wheel with screws)

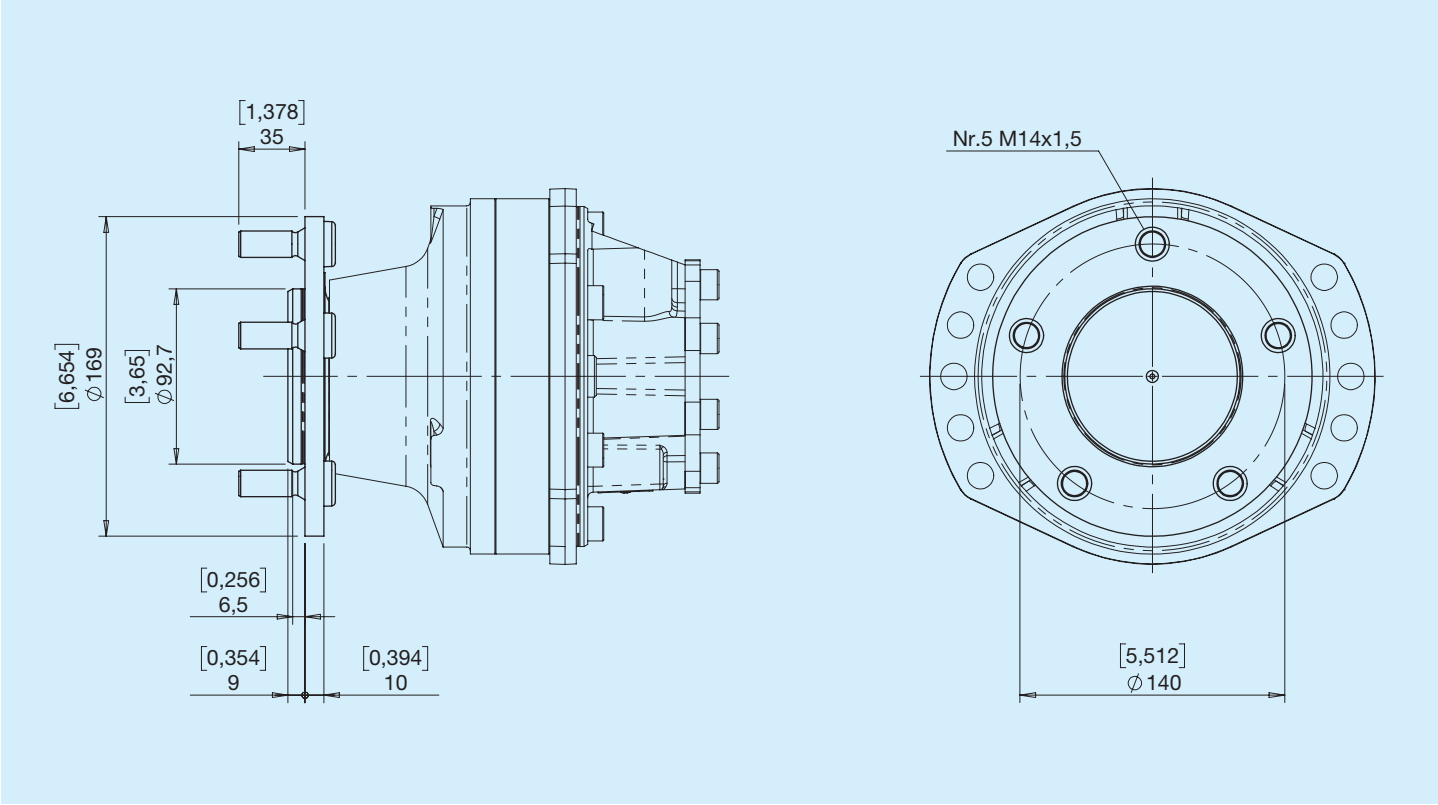

2 Rear (wheel with screws+nuts)

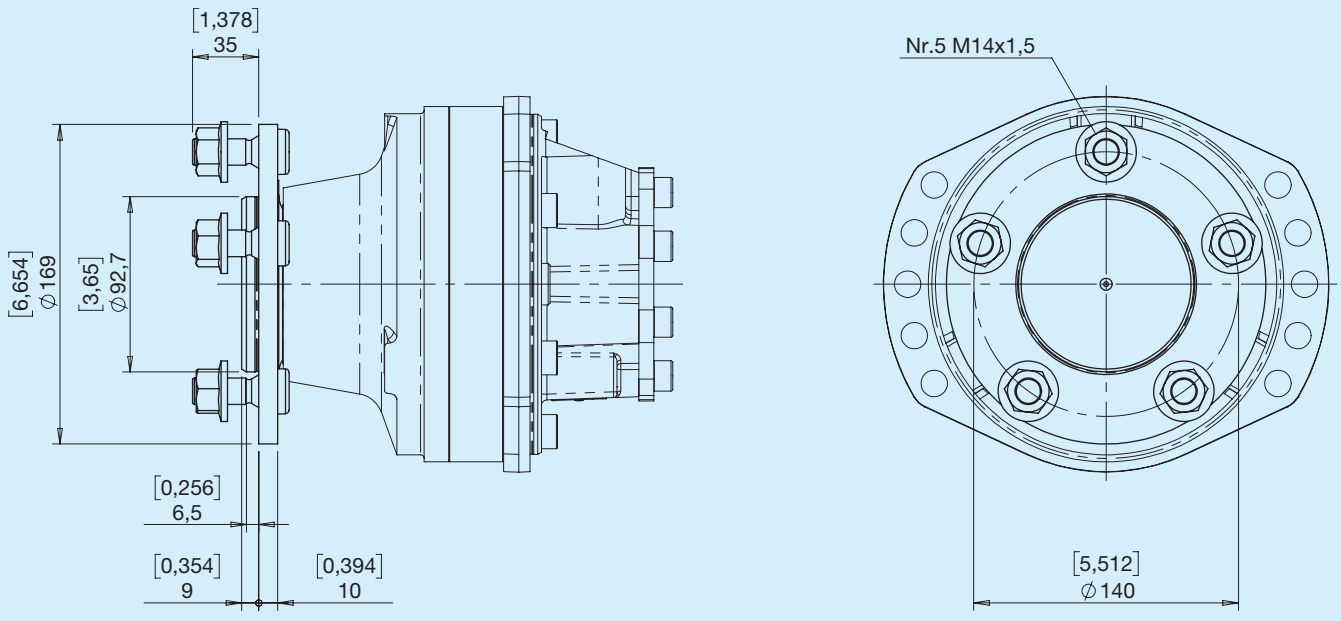

E Shaft DIN 5480 W50x2x30x24

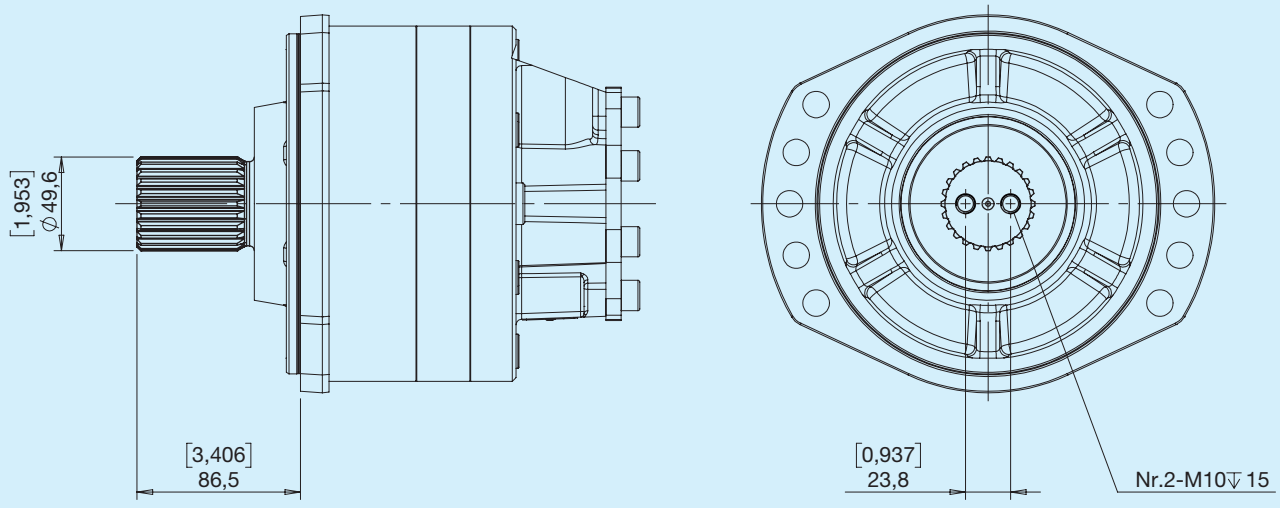

Max. torque 2860 Nm

Ports

Type G

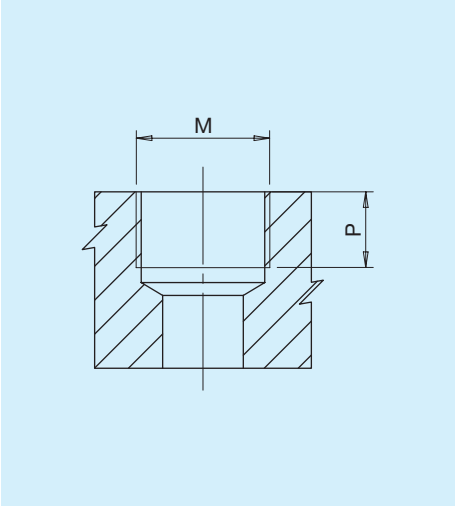

Type	M		P	
		Nm	**mm**	**in**
G2	Port ISO 1179-1 - G 1/4	17	15	0.59
G3	Port ISO 1179-1 - G 3/8	38	12.5	0.49
G4	Port ISO 1179-1 - G 1/2	70	15	0.59

Type U

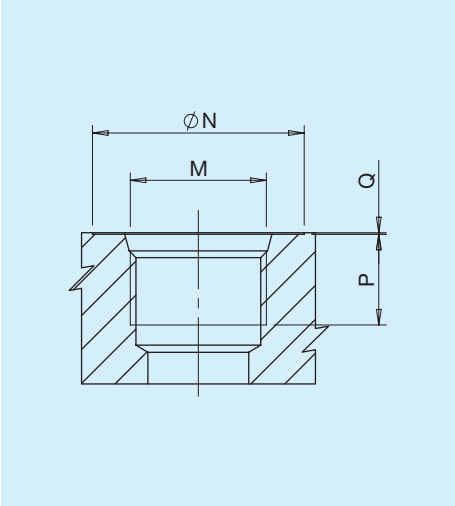

Type	Dim.	N		P		Q		M	
		mm	**in**	**mm**	**in**	**mm**	**in**		**Nm**
U2	1/4'	21	0.83	12	0.47	0.3	0.01	Port ISO 11926-1 - 7/16-20	17
U3	3/8'	26	1.02	15	0.59	0.3	0.01	Port ISO 11926-1 - 9/16-18	38
U4	1/2'	30	1.18	15	0.59	0.3	0.01	Port ISO 11926-1 - 3/4-16	47

Combinations

Type	Input/Output **A-B**	Drain port **L1-L2**	Displacement change **Y**	Brake release **X**
G	G6	G3	G6	G2
U	U6	U3	U6	U2

FC Fixed without Brake

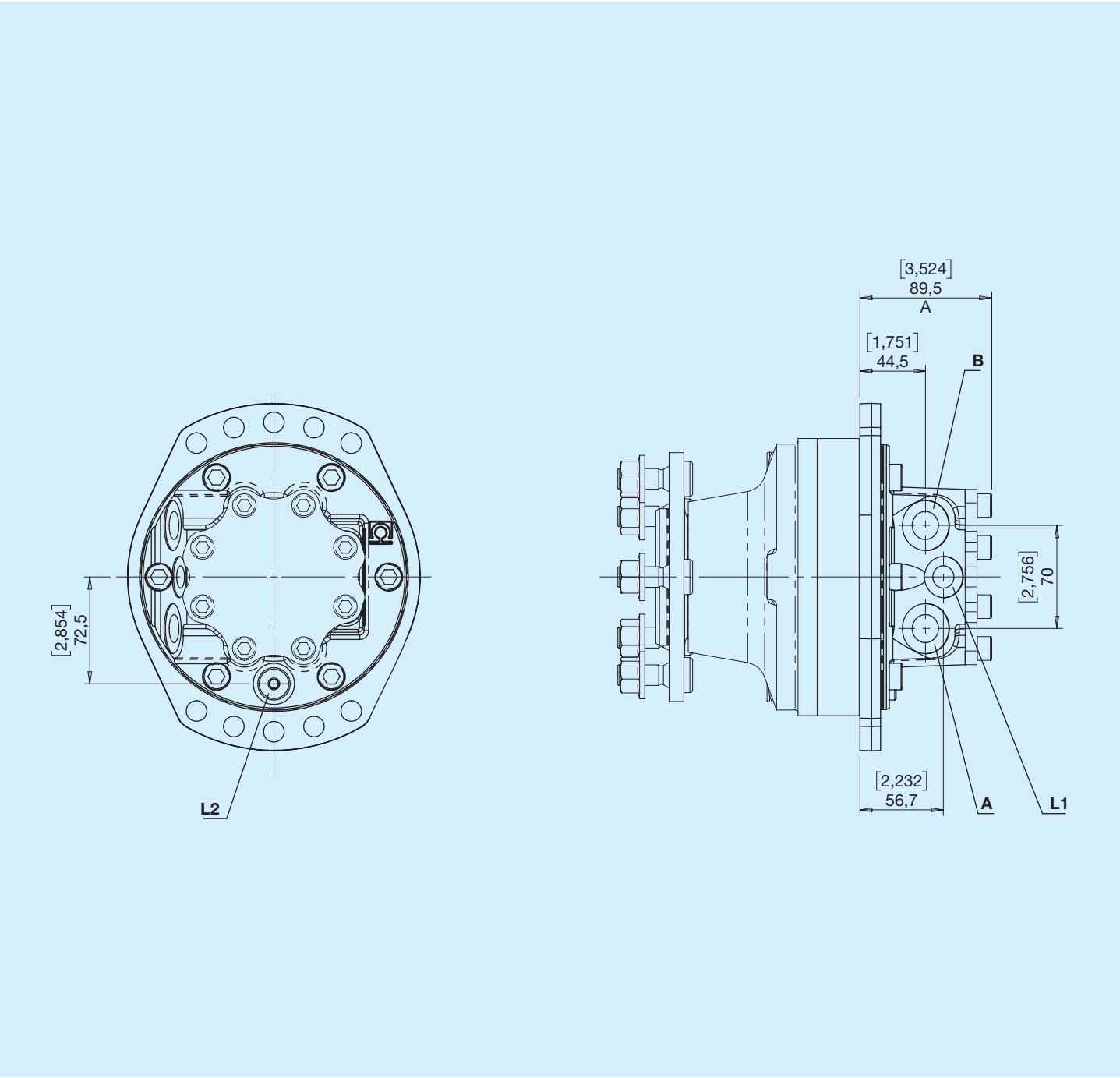

A,B - Use
L1, L2 - Drain port

FF Fixed with Brake

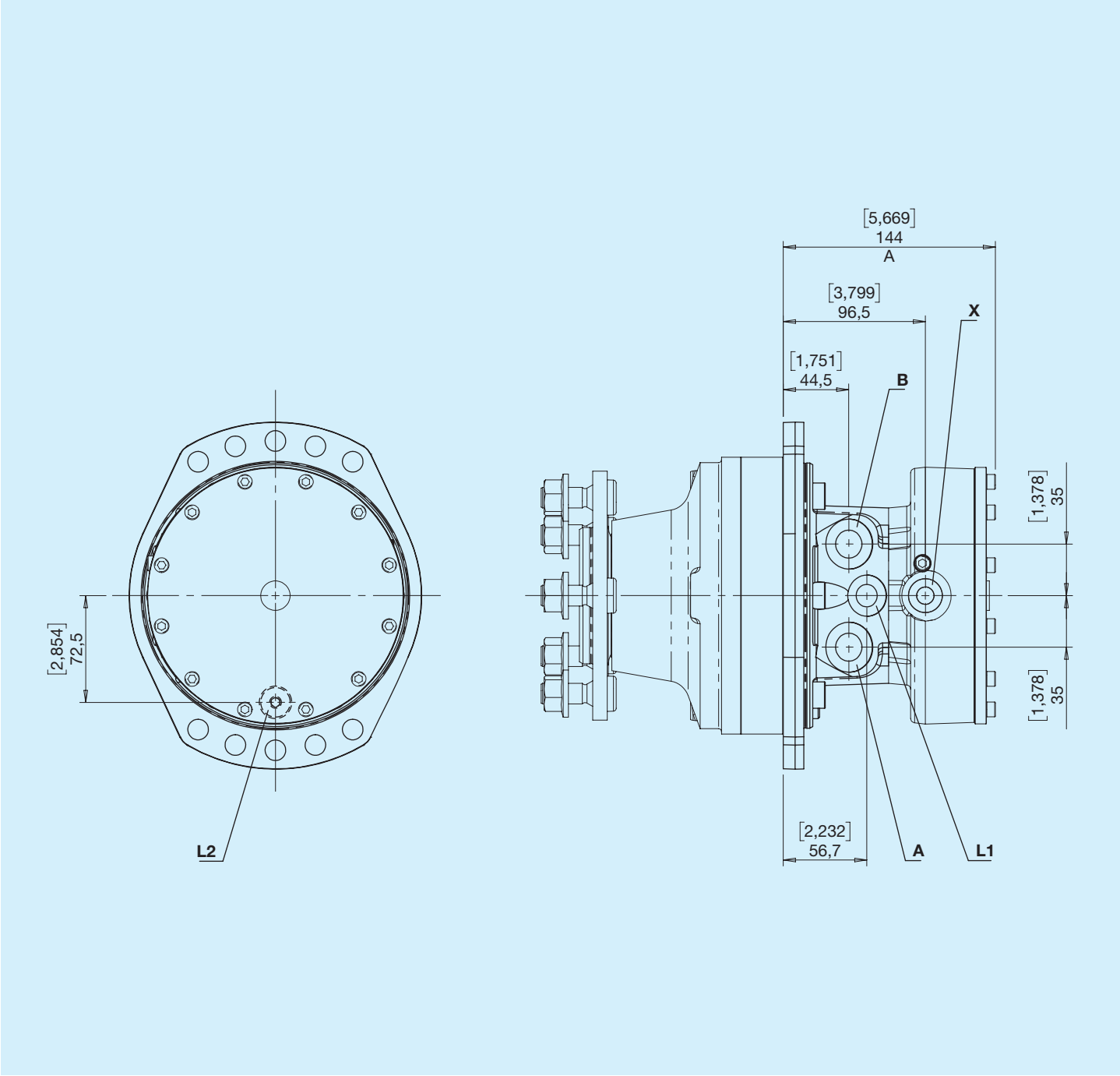

A,B - Use
L1, L2 - Drain port
X - Sblocco Freno

VC 2 Speeds without Brake

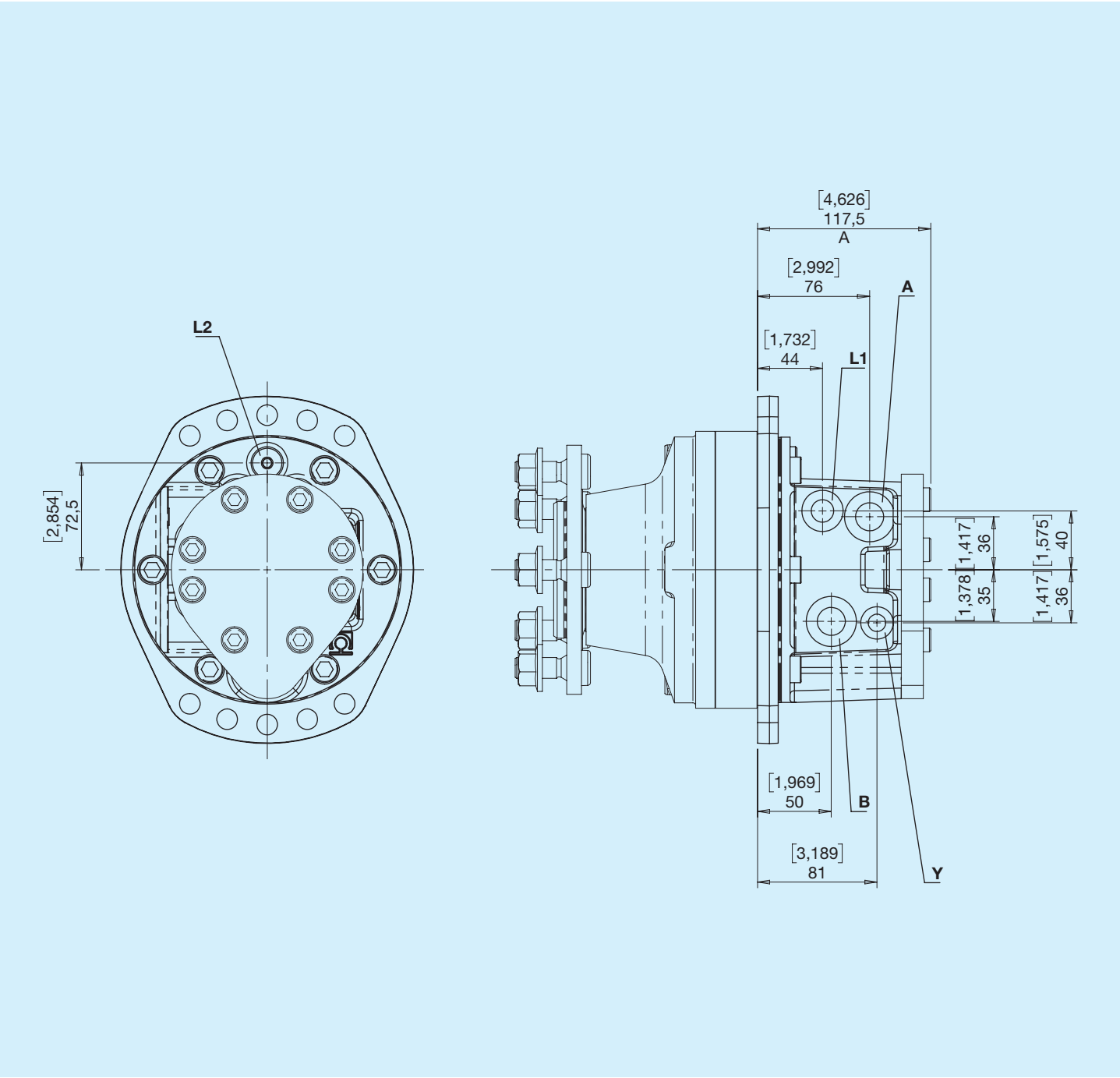

A,B - Use
L1, L2 - Drain port
Y - Cambio cilindrata

VF 2 Speeds with Brake

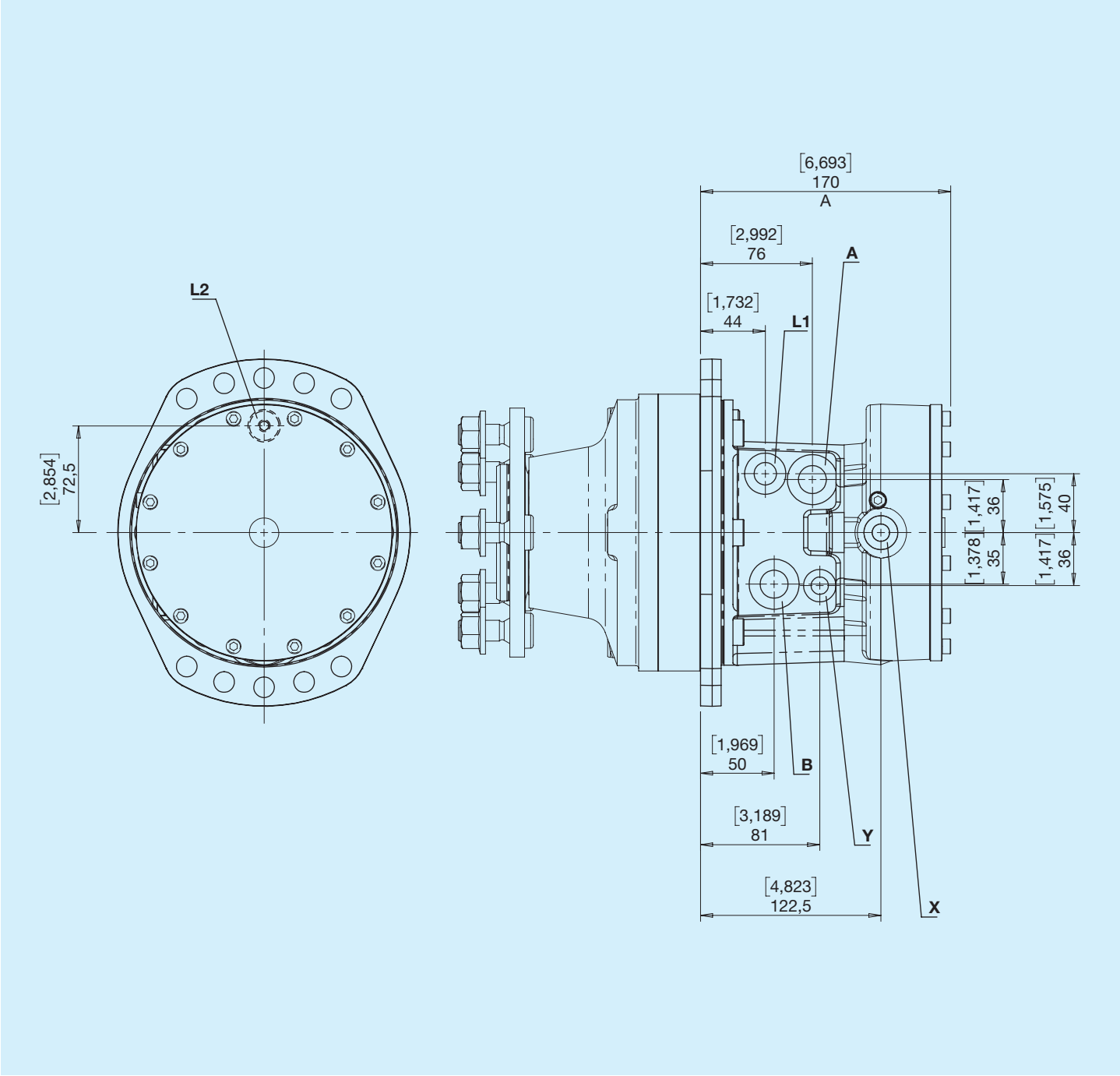

A,B - Use
L1, L2 - Drain port
Y - Cambio cilindrata
X - Sblocco Freno

AC Fixed without Brake

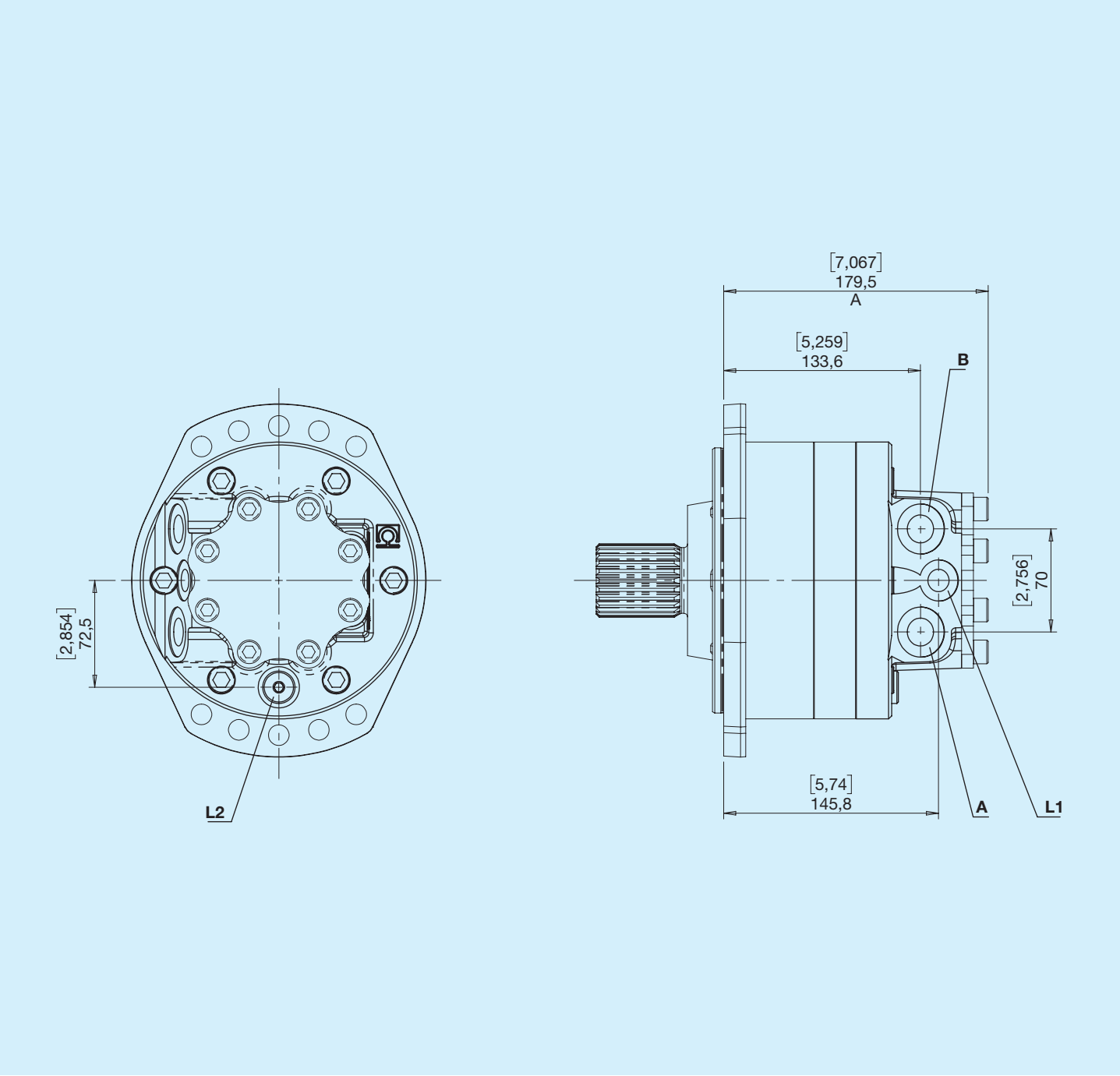

A,B - Use
L1, L2 - Drain port

AF Fixed with Brake

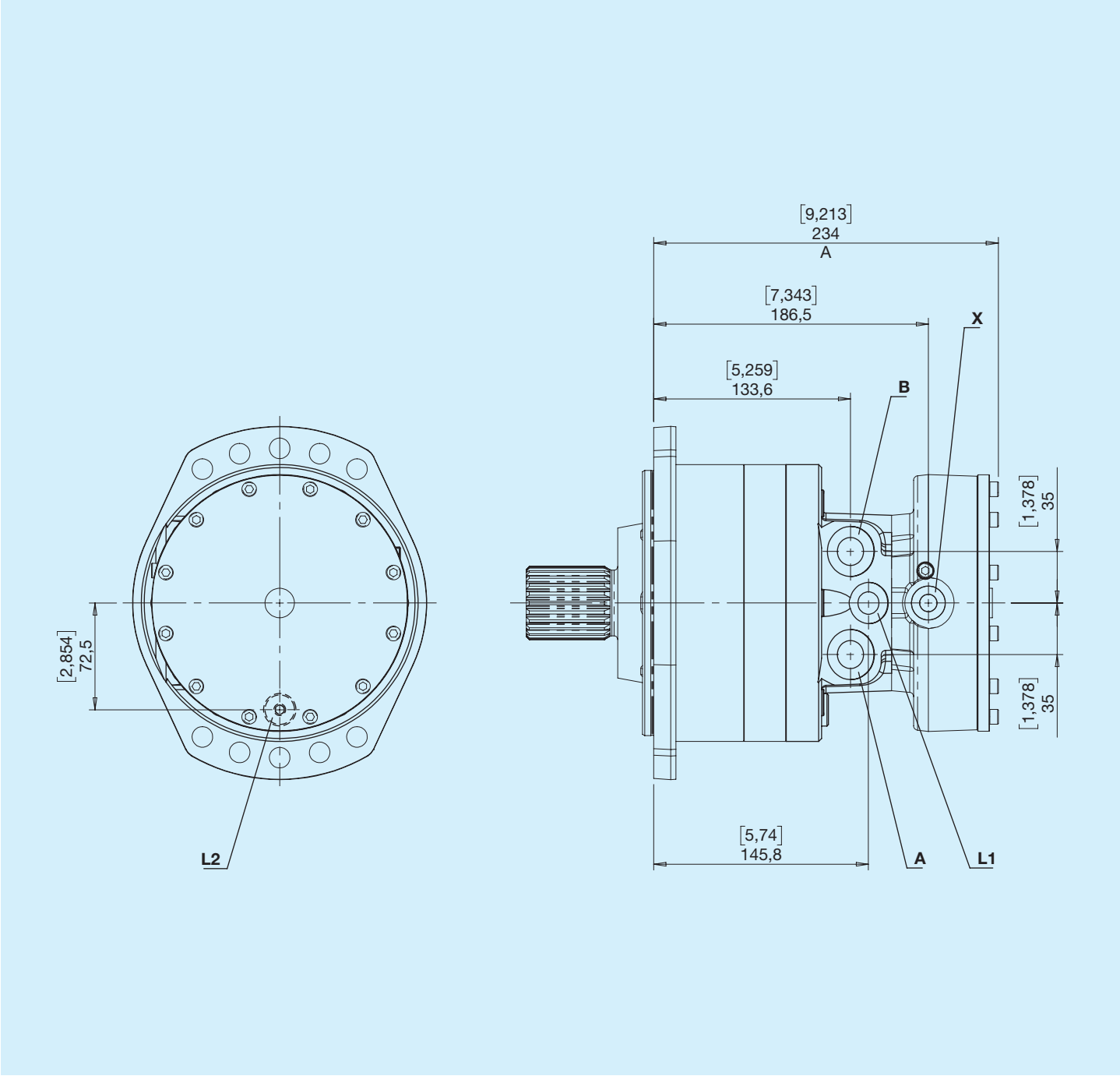

A,B - Use
L1, L2 - Drain port
X - Sblocco Freno

WC 2 Speeds without Brake

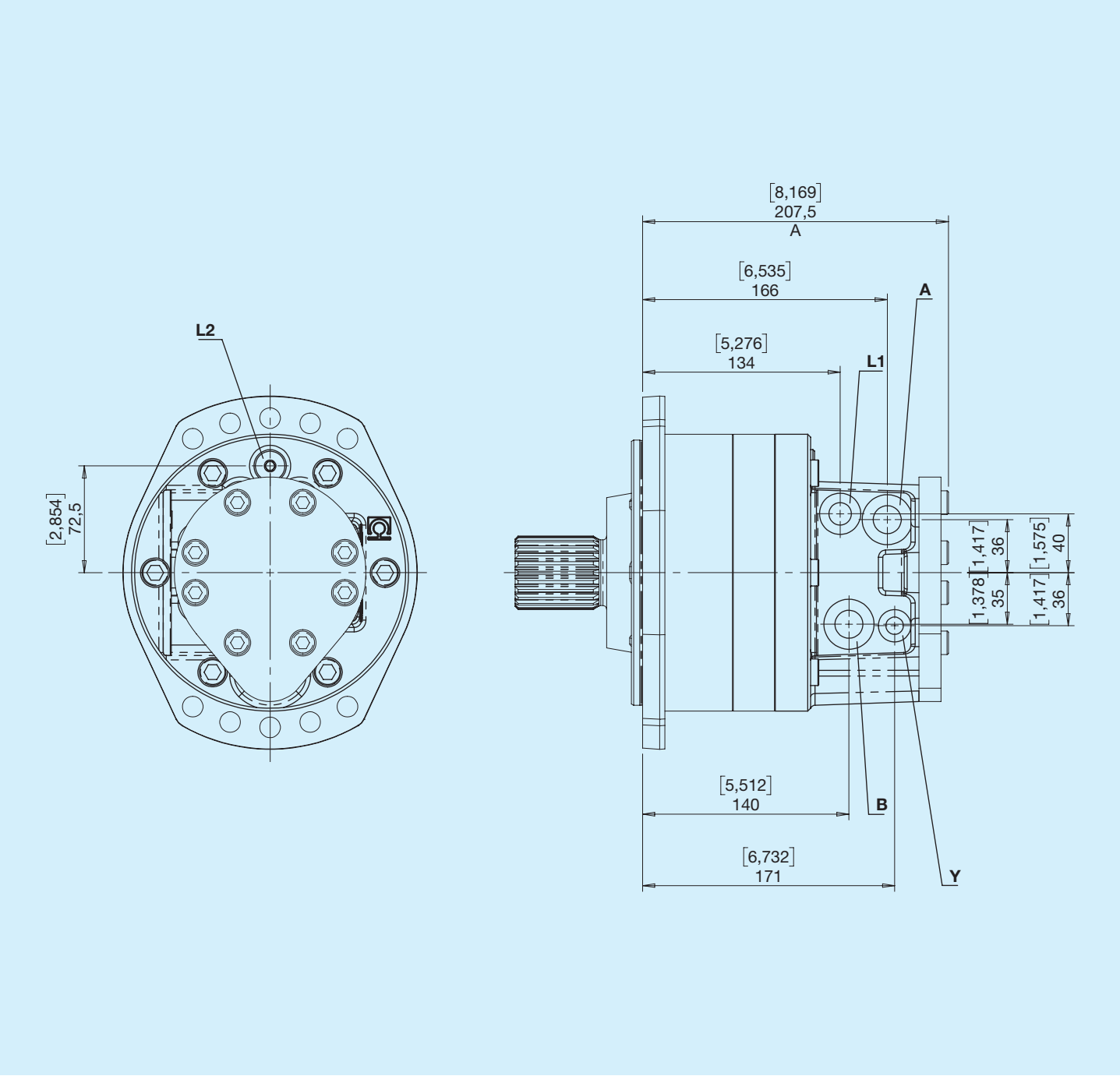

A,B - Use
L1, L2 - Drain port
Y - Cambio cilindrata

WF 2 Speeds with Brake

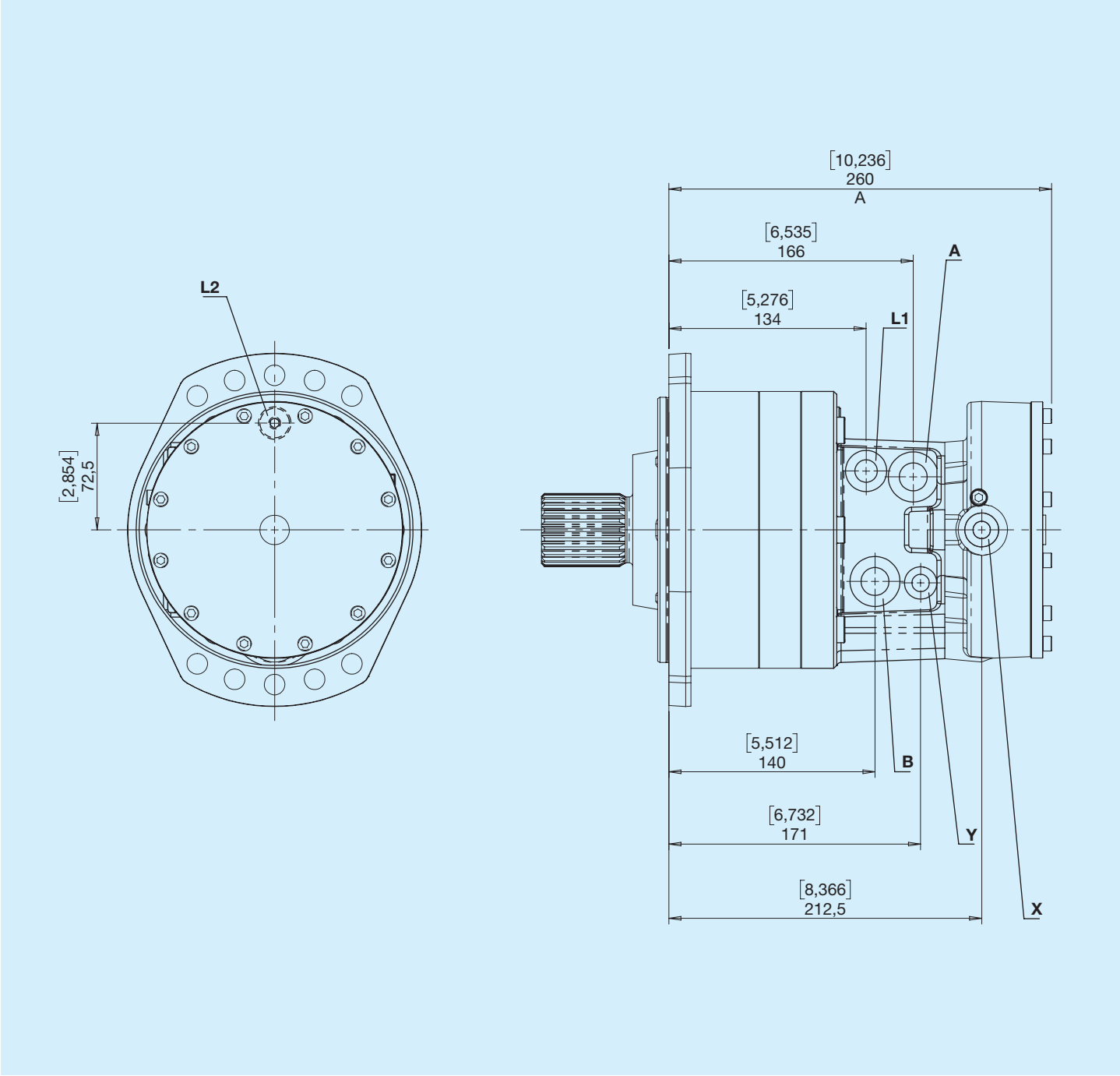

A,B - Use
L1, L2 - Drain port
Y - Cambio cilindrata
X - Sblocco Freno

Instructions for ordering

HPR2 210-400	1	2	3 4 5	6	7	8	9	10 11 12

1 — Standard displacement

2	

2 — Shafts

F	Fixed	**V**	Variable

3 4 5 — Minimum displacement

210	**260**	**360**
230	**330**	**400**

6 — Flanges

R	Rear (wheel)	**1**	Rear (wheel with screws)	**2**	Rear (wheel with screws+nuts)	**E**	Shaft DIN 5480 W50x2x30x24

7 — Shafts

F	With Brake	**C**	Without Brake

8 — Type of ports

G	Gas	**U**	Unf

9 — Accessories

0	No option	**C**	Painting	**V**	Flushing valve	**S**	Speed sensor

10 11 12 — Special versions

...	