General instructions for use

KVS | KDR

SAE KVS and KDR type joints

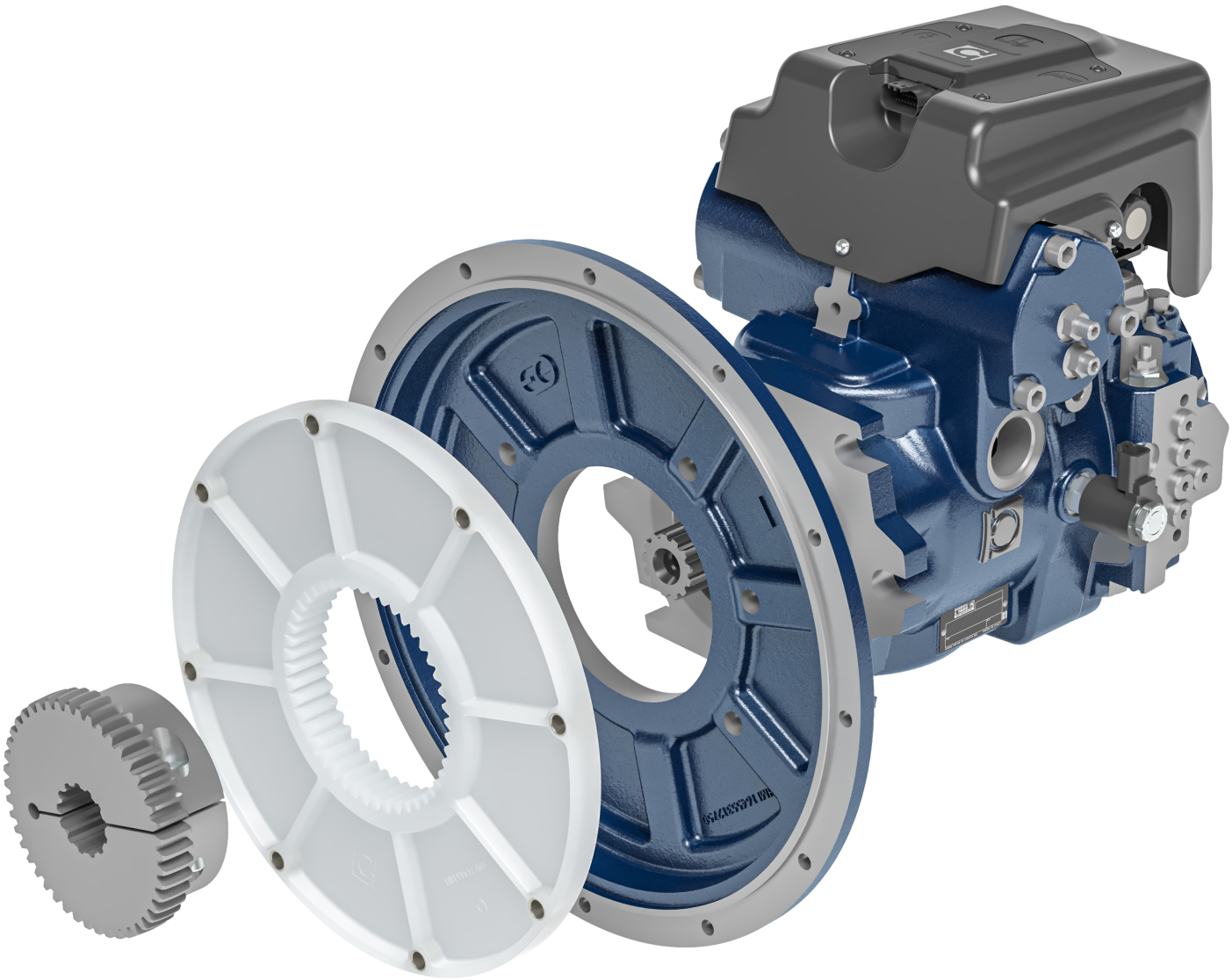

Introduction

The following document was prepared to provide general instructions for handling, assembly and storage of SAE KVS and KDR joints.

Contents

Handling and storage

Handling Make sure that the goods are handled correctly and by means of appropriate lifting equipment to avoid any type of injury to operators and/or damage to the goods themselves.

Storage The flange can be stored for up to a maximum of 3 months from receipt in a dry and indoor place.
Make sure that the goods storage room is not damp and that condensation is not generated.
The percentage of air humidity must be less than 65%.

Mounting the flange

Fit the KVS or KDR nylon flange into the appropriate motor flywheel seat, paying attention to the orientation indicated on the drawing provided by HP.

Warning!

Do not apply force during this operation. Otherwise, the material may not be suitable and must be discarded.

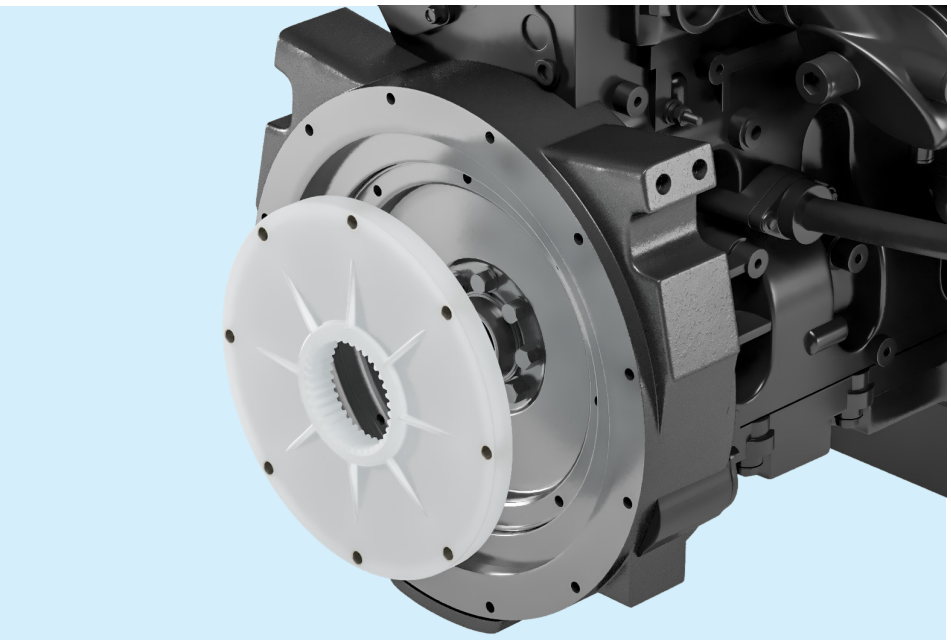

Warning!

If flange has to be mounted with the protruding part facing the flywheel, make sure that there is no interference with any screws* and that the ribbing does not separate the flange from its support surface.

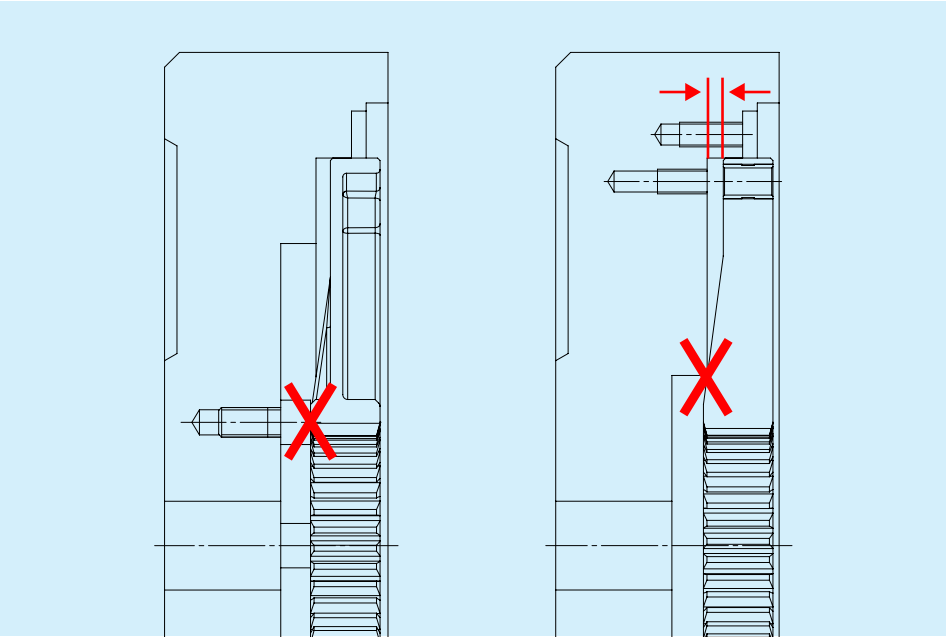

Secure the flange with hexagonal head TE ISO 4017 8.8 screws*.

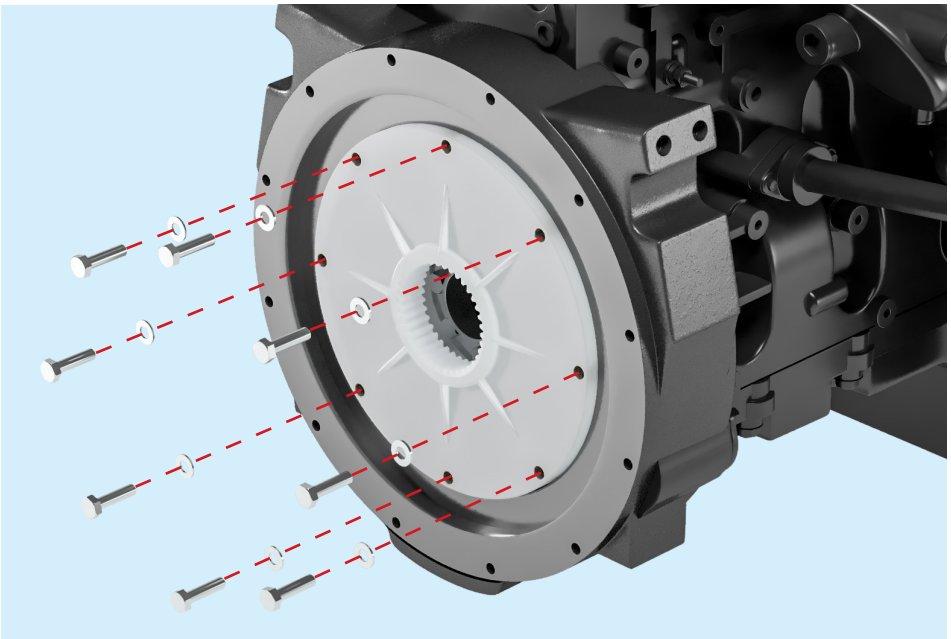

Refer to the following table for tightening torques:

Screw	Tightening torque
M8	25
M10	49

Warning!

Using washers is not essential. If it is decided to use washers, check:

- the thickness of the washer does not create interference between the screw heads and the inner surface of the bell;
- their outer diameter does not interfere with certain parts of the motor.

Do not apply grease or any other type of product on the internal teeth of the flange.

***Note** The screws for securing the flange, bell and pump are not supplied.

Mounting the bell

Before mounting the bell, make sure that the application is standard by checking that the hub passes through the hole in the bell itself. Otherwise, the application is special and changes the component mounting sequence. In this case, go to the **Mounting special applications** section.

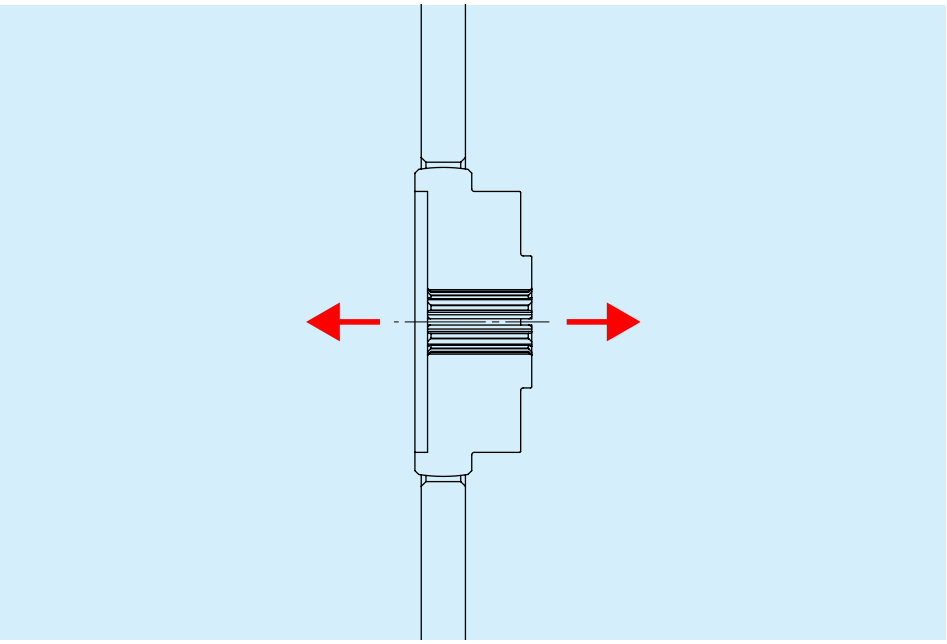

Fit the bell into its seat on the motor.

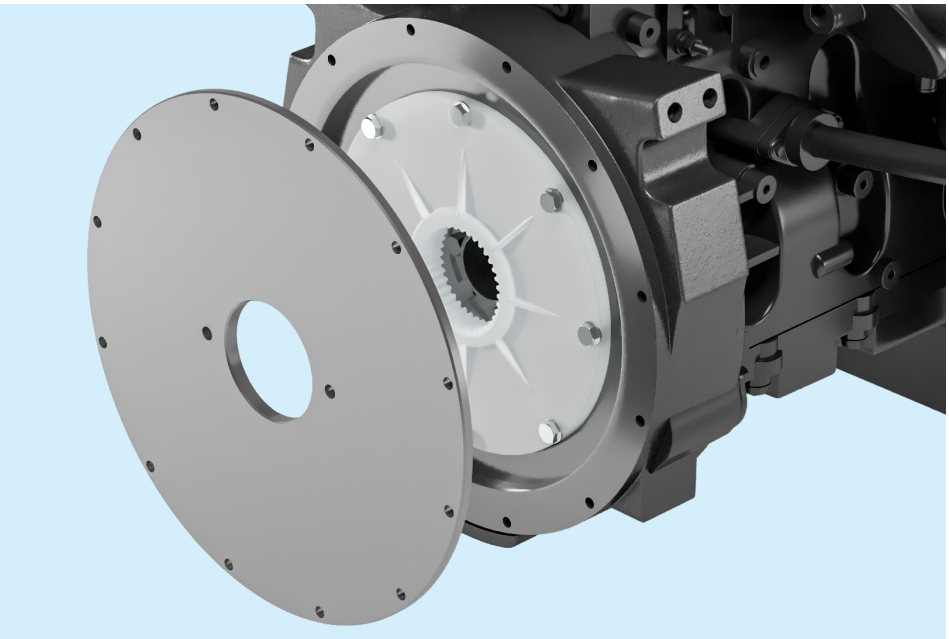

Warning!

Make sure that the screws* used to secure the flange and the flange itself do not interfere with the inner surface of the bell.

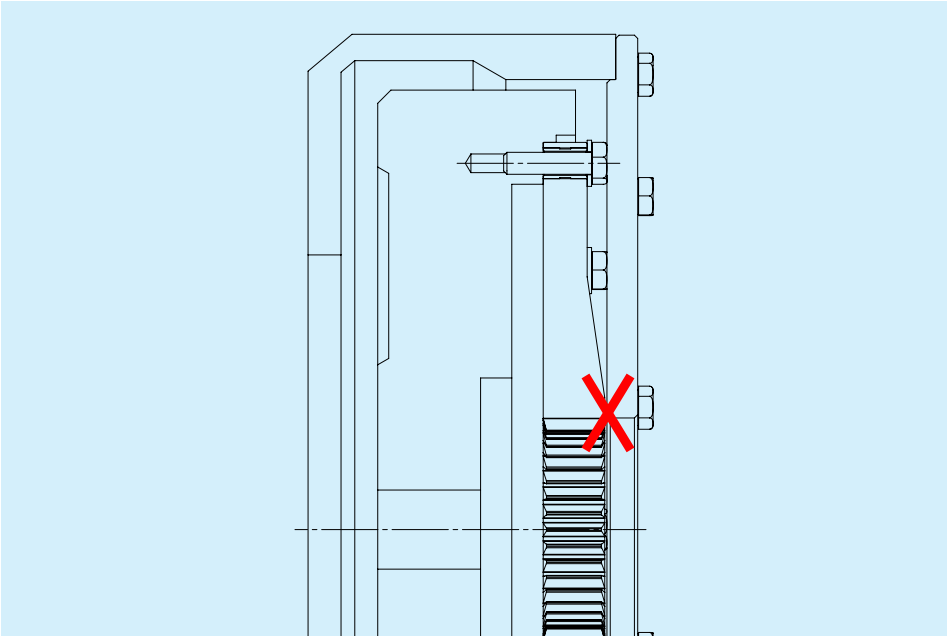

Secure the bell using screws* as preferred (screw type is not important).

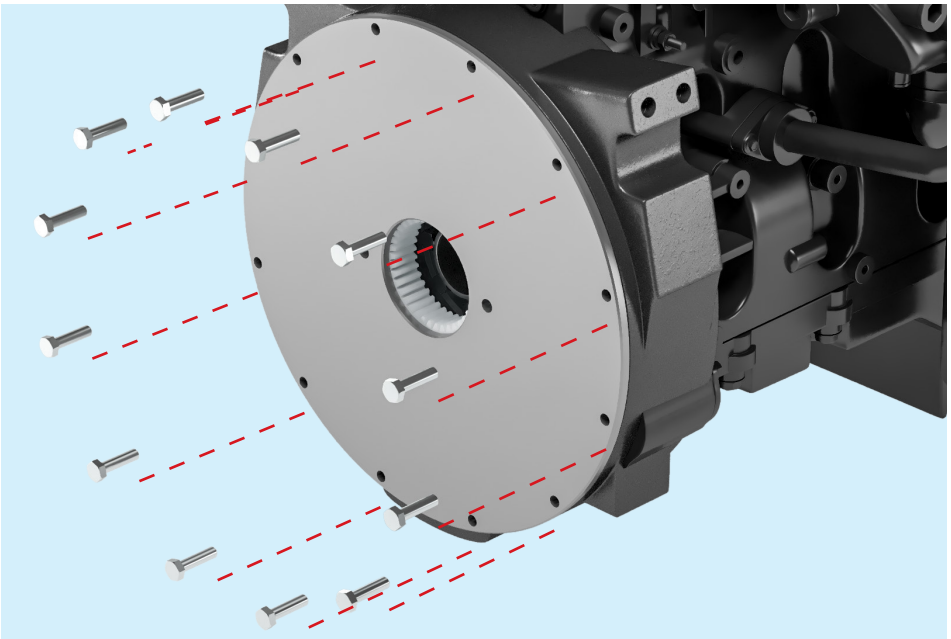

***Note** The screws for securing the flange, bell and pump are not supplied.

Mounting the hub on the pump shaft

The following instructions concerning the mounting of the hub on the pump shaft apply to both KVS and KDR hubs.

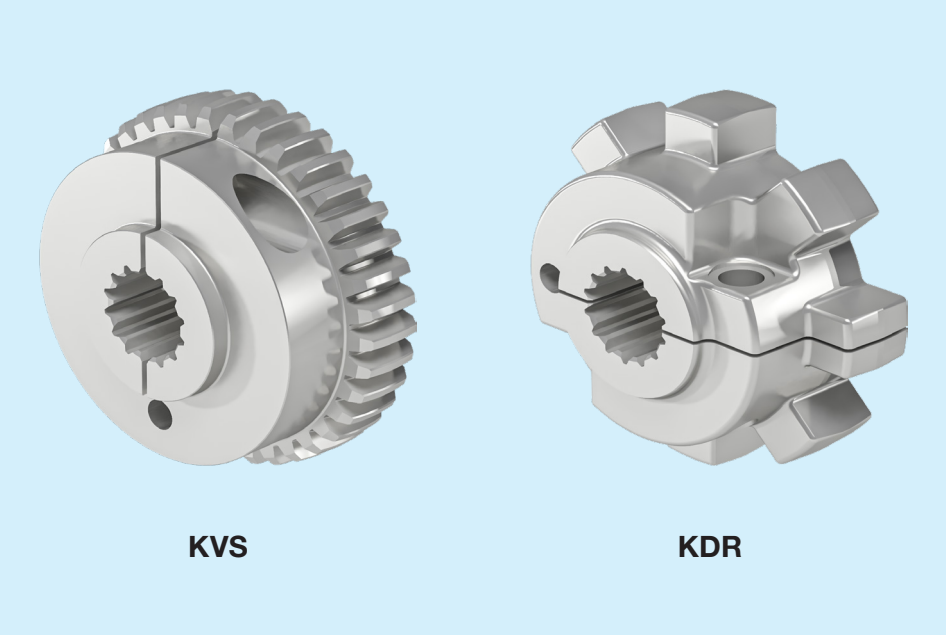

For grooved shafts, fit the KVS or KDR hub on the pump shaft, maintaining the mounting measurement indicated by HP on the drawing. If this measurement is not indicated, slide the component until it is snug on the shaft.

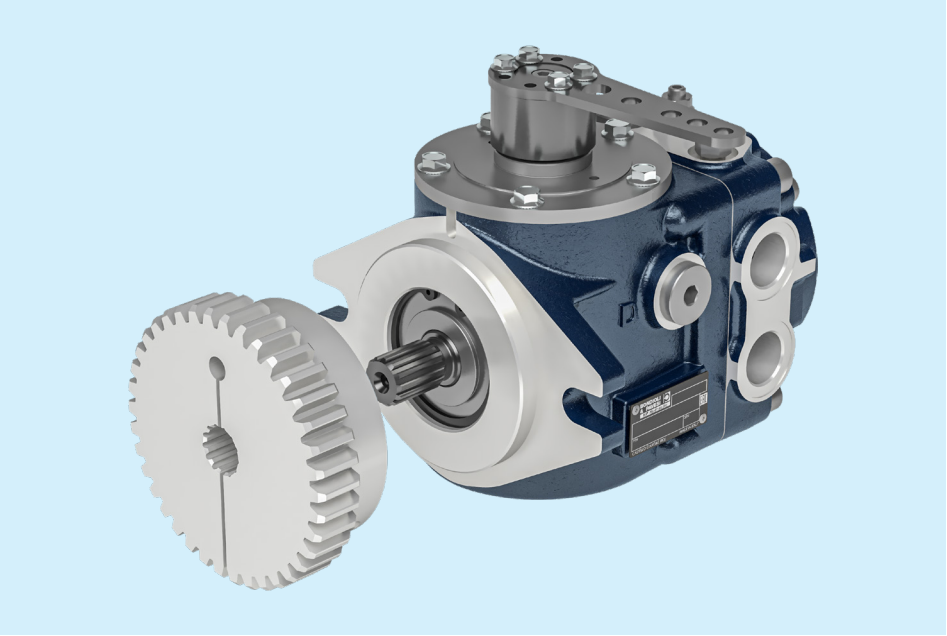

Make sure that the hub does not touch fixed parts of the pump, otherwise it is not suitable and must be replaced with another component having a different profile.
In special applications, also make sure that the hub does not touch the bell.

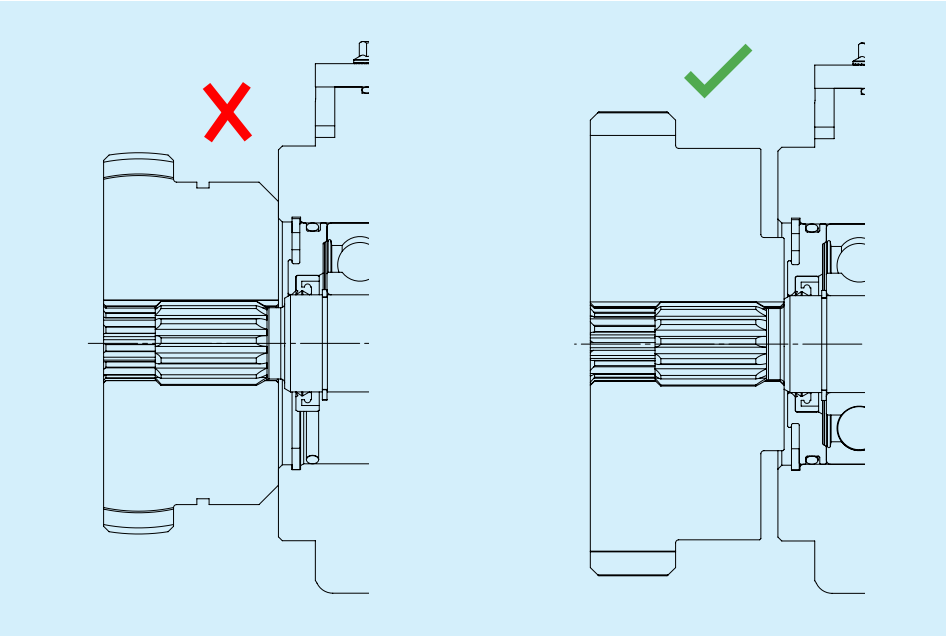

Measure the distance on the motor between the outer surface of the bell and the end of the teeth of the flange mounted on the flywheel.
Measure the distance between the surface of the pump flange and the end of the hub teeth

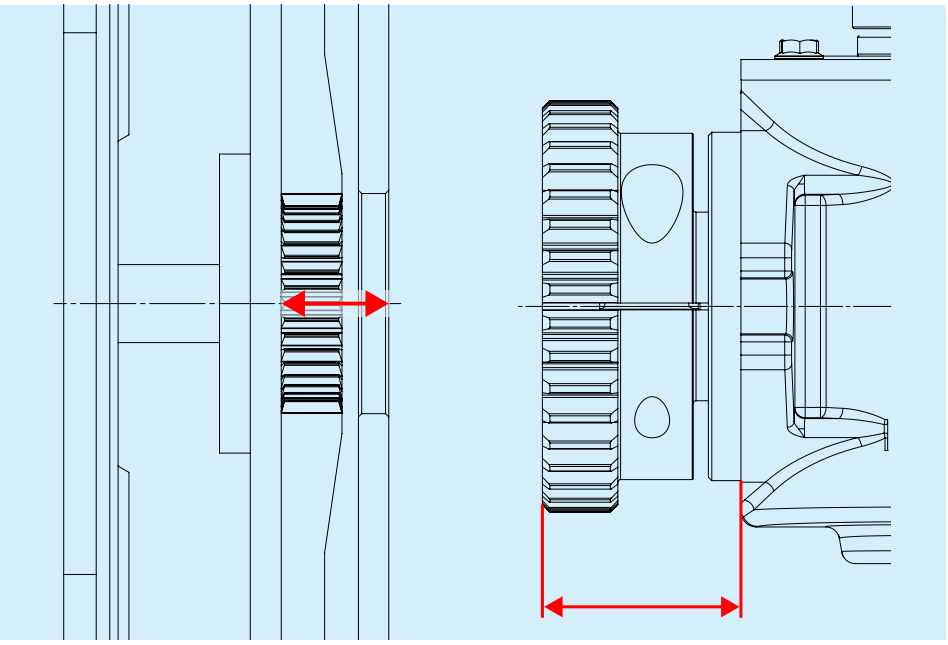

Warning!

These two measurements must be the same or in any case compatible in such a way that the teeth of the hub completely mesh with the teeth of the flange.

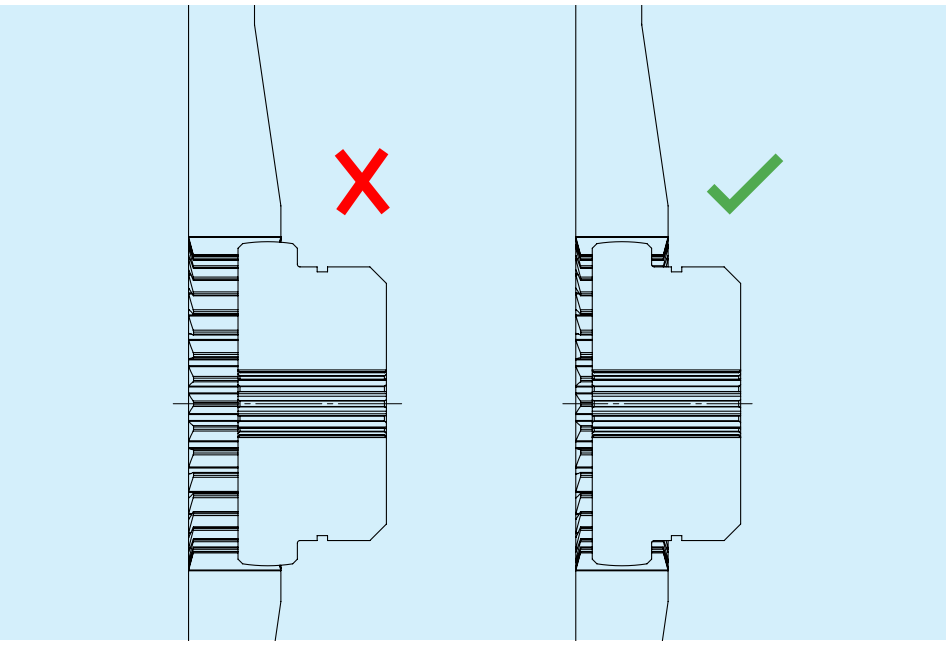

Tighten the hub on the pump shaft by screwing the screw provided to the tightening torque shown in the following tables for KVS or KDR versions:

KVS hub	Screw	
	Description	**Tightening torque**
Z.33	TCEI M8x20 UNI 5931-8.8	25
Z.38 L=37 mm	TCEI M8x30 UNI 5931-8.8	25
Z.38 L>37 mm	TCEI M10x30 UNI 5931-8.8	49
Z.38 M3	TCEI M12x40 UNI 5931-12.9	145
Z.46	TCEI M12x50 UNI 5931-12.9	145

KDR hub	Screw	
	Description	**Tightening torque**
KDR 33	TCEI M8x30 UNI 5931-12.9	41
KDR 38	TCEI M8x30 UNI 5931-12.9	41
KDR 38 M3	TCEI M12x40 UNI 5931-12.9	145

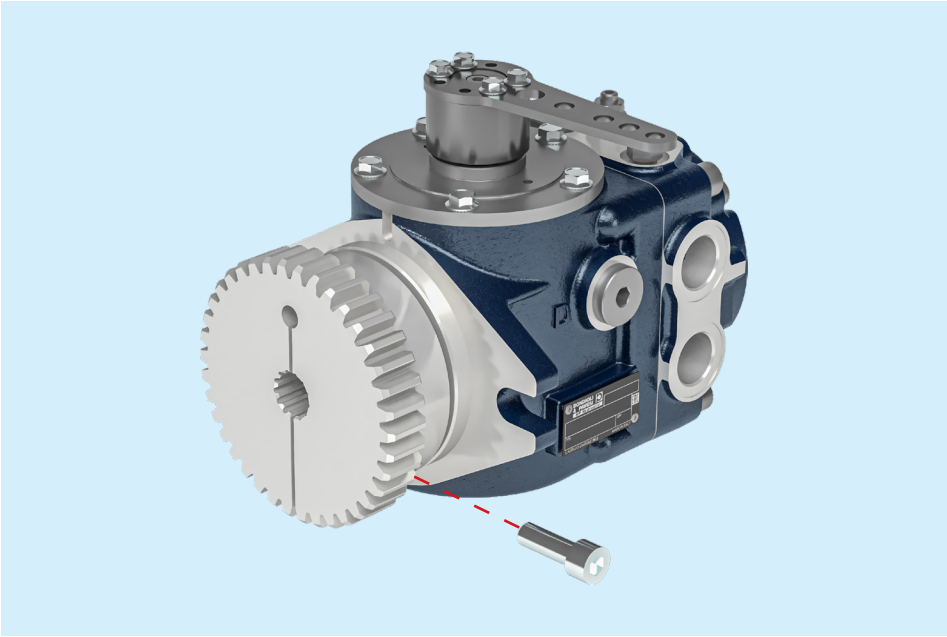

For gear pumps with a European flange and conical shaft (Gr. 2 and Gr. 3), first fit the adapter ring and then the hub in the pump centring, sliding it to the end of its stroke. Lastly, secure it with the nut on the head of the shaft itself.

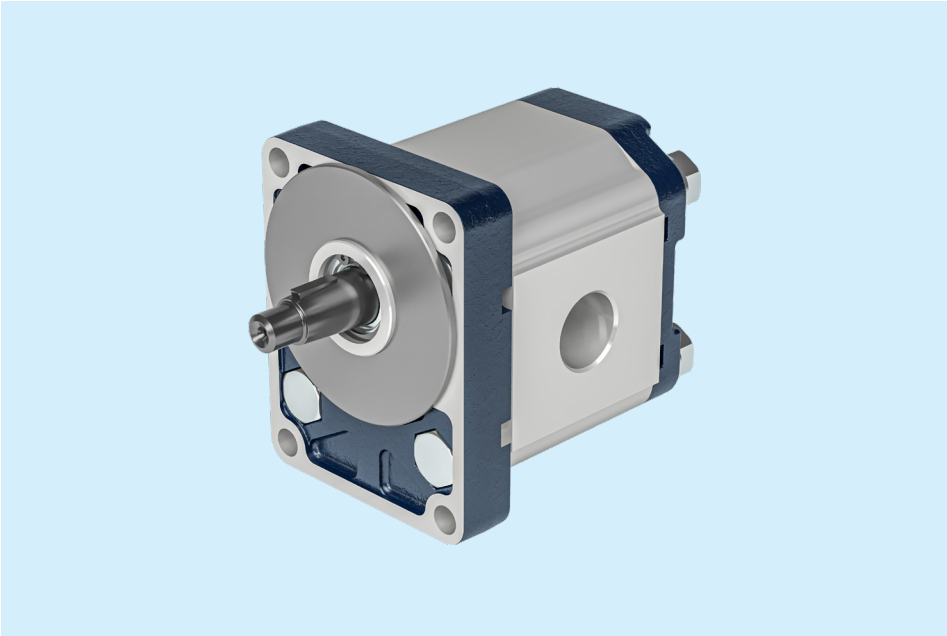

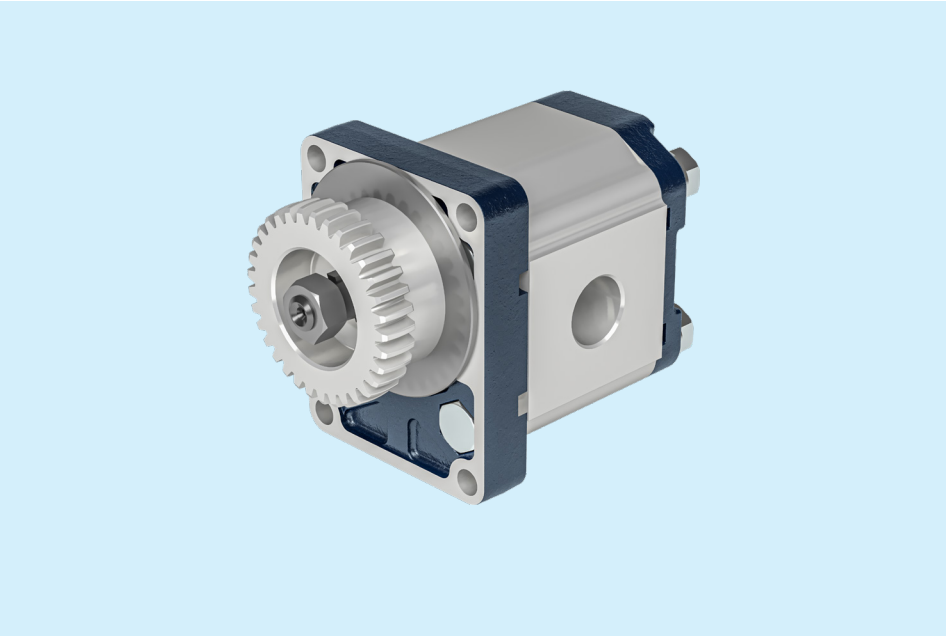

For cylindrical shafts, fit the KVS or KDR hub on the pump shaft, maintaining the mounting measurement indicated by HP on the drawing. If this measurement is not indicated, slide the component until it is snug on the shaft.
Tighten the hub by screwing the grub screw provided on the shaft key to tightening torques shown in the following table:

Grub screw	Tightening torque
M6	8.5
M8	20
M10	40

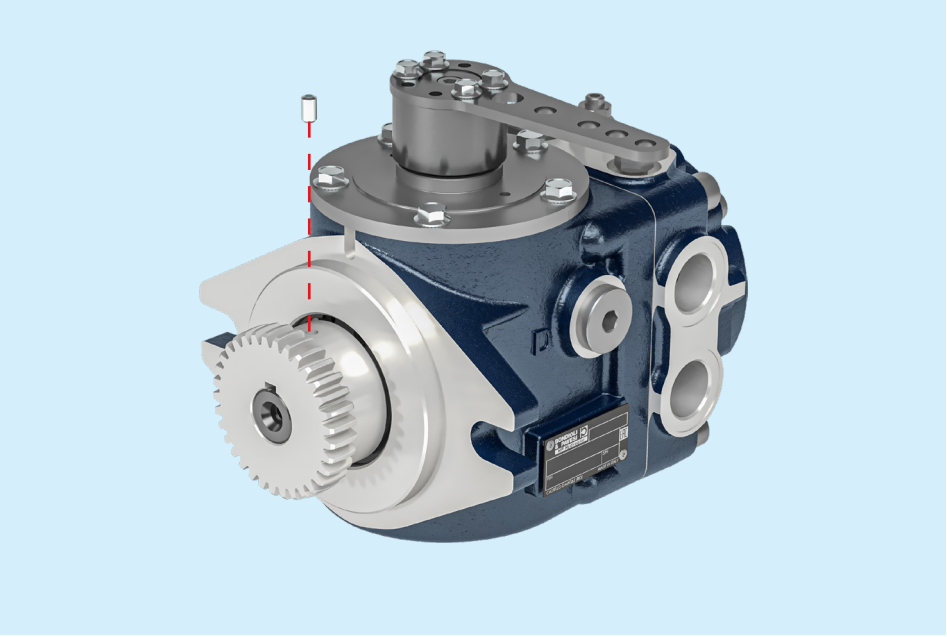

***Note** The screws for securing the flange, bell and pump are not supplied.

Mounting the pump and hub assembly on the bell

Mount the pump on the bell by centring the cylindrical part of the pump with the respective hole in the bell and, at the same time, mesh the hub teeth into the teeth on the nylon flange.

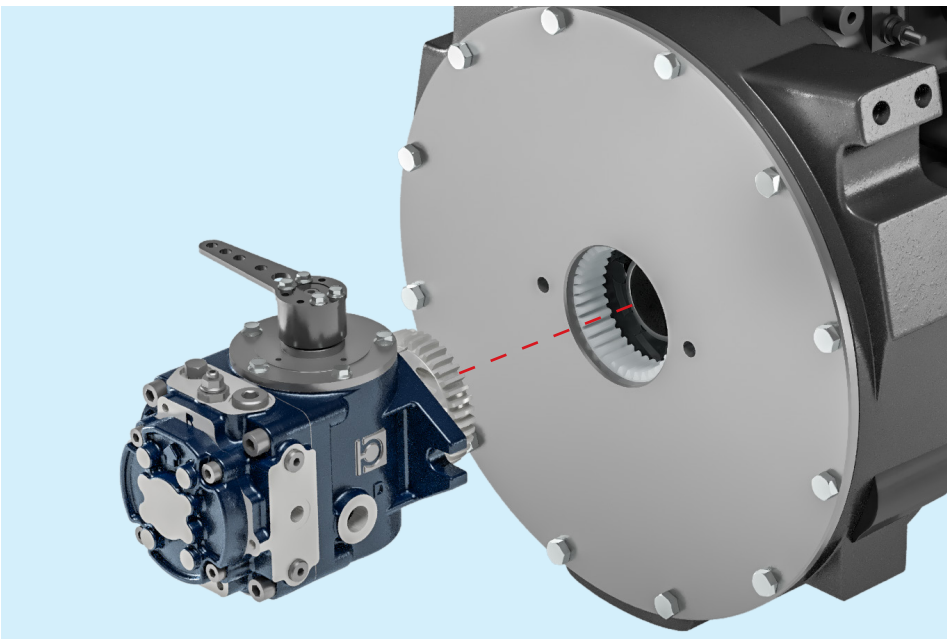

Position the pump to align the centres of the screw slots* with the threaded holes on the bell.

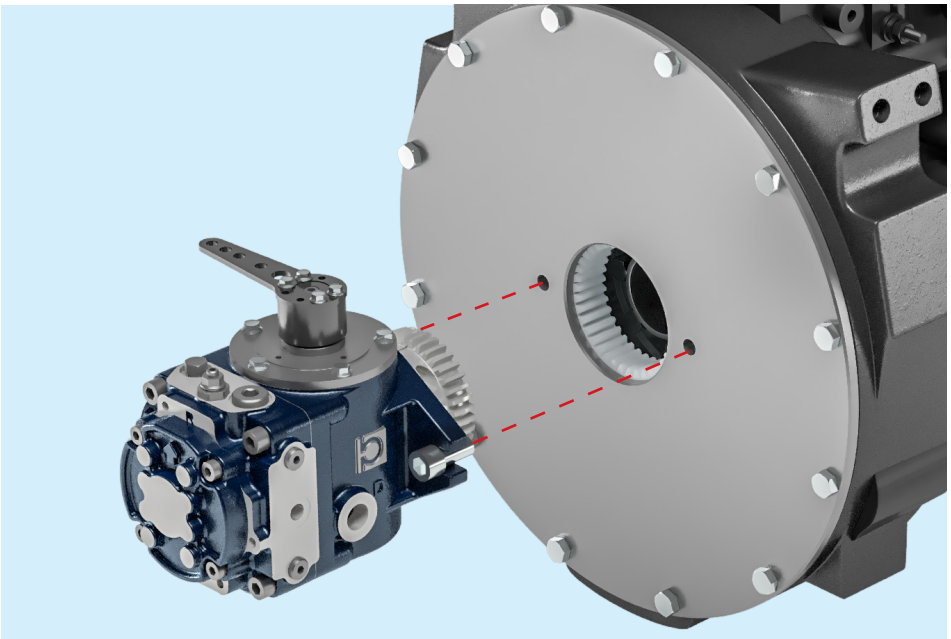

Secure the pump with screws*.

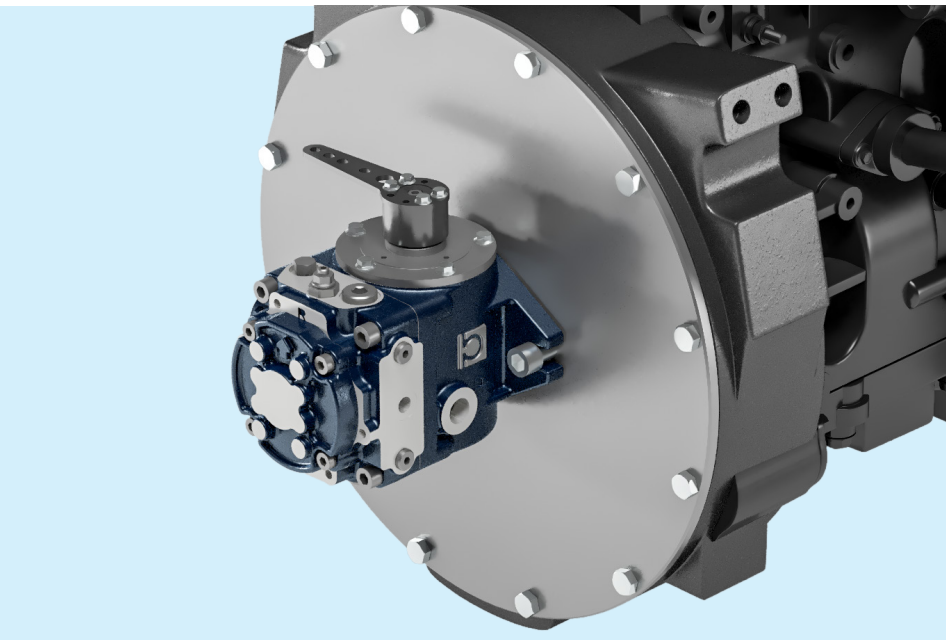

***Note** The screws for securing the flange, bell and pump are not supplied.

Mounting special applications

After mounting the flange on the motor flywheel, mount the bell on the pump.

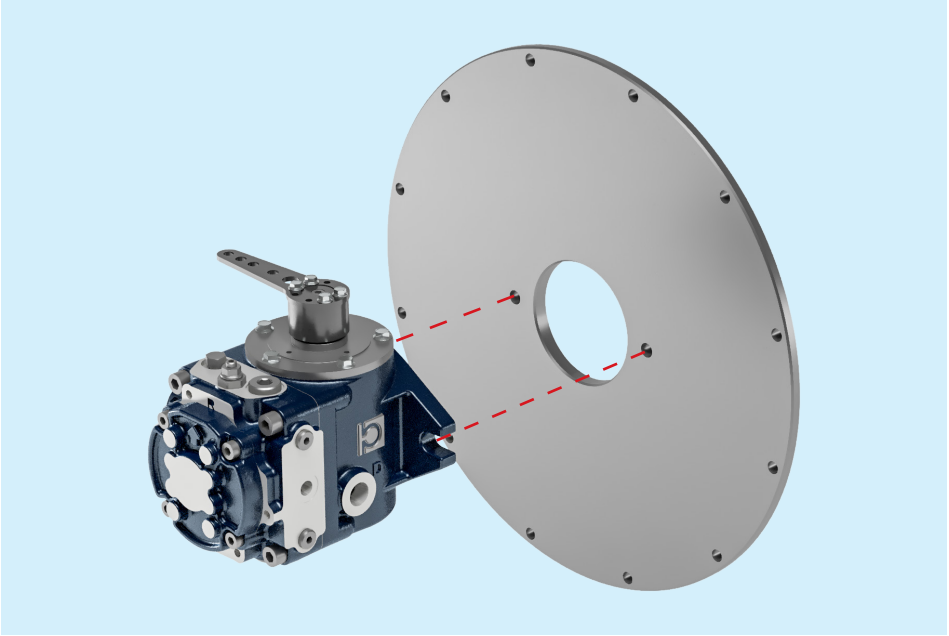

Secure the pump with screws.

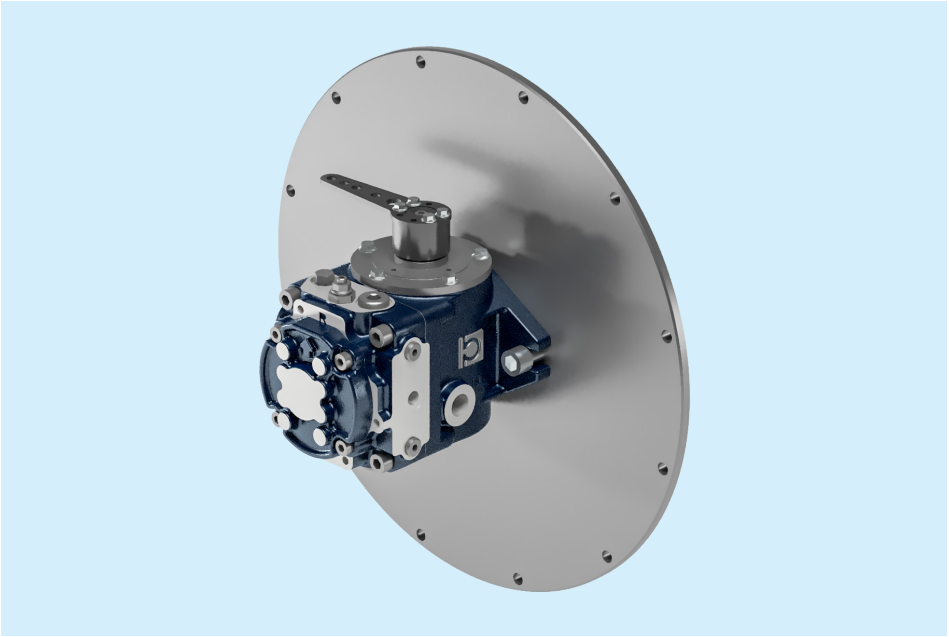

Mount the hub on the pump shaft following the indications given in the chapter **Mounting the hub on the pump shaft**.

Mount the pump, bell and hub group by inserting the bell into its seat on the motor.

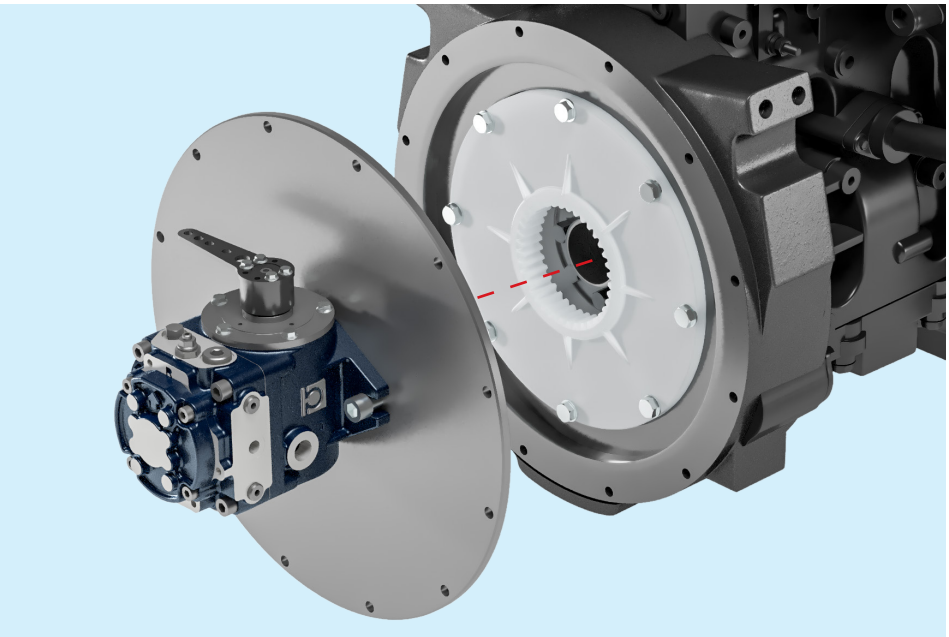

Secure the bell with screws (the type of screw is not important).

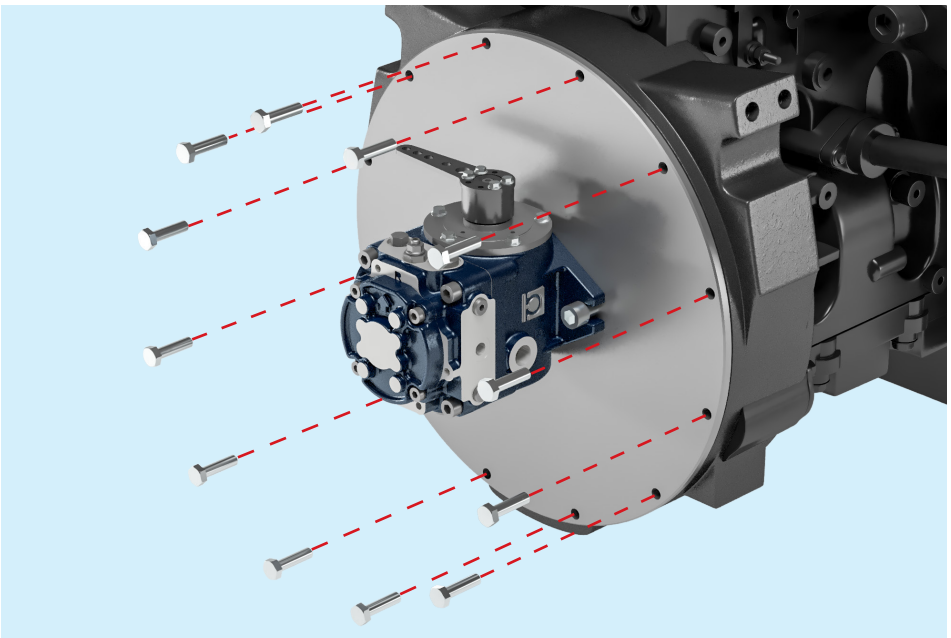

***Note** The screws for securing the flange, bell and pump are not supplied.

Labelling and traceability

An adhesive identification label is applied to the bells. The identification code is stamped on the nylon flanges.
It is important that both codes are notified to HP when requesting spare parts.